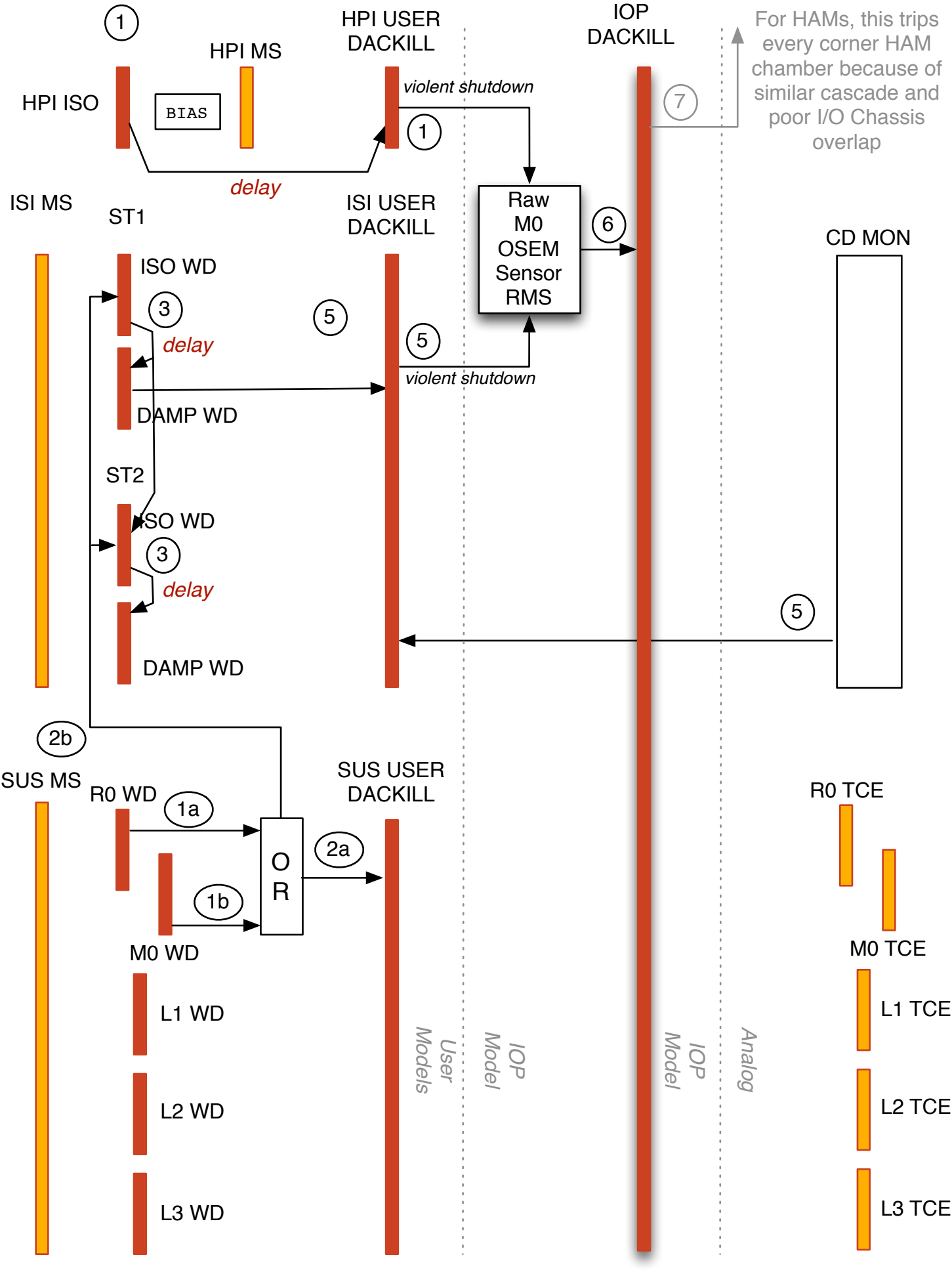
1
HPI ISO
BIAS
HPI MS
HPI USER DACKILL
violent shutdown
1
delay
IOP DACKILL
7
For HAMs, this trips every corner HAM chamber because of similar cascade and poor I/O Chassis overlap
ISI MS
ST1
ISI USER DACKILL
Raw M0 OSEM Sensor RMS
6
CD MON
ISO WD
3
5
delay
5
violent shutdown
DAMP WD
ST2
ISO WD
3
delay
5
DAMP WD
2b
SUS MS
R0 WD
1a
SUS USER DACKILL
2a
O R
1b
M0 WD
L1 WD
L2 WD
L3 WD
User Models
IOP Model
IOP Model
Analog
R0 TCE
M0 TCE
L1 TCE
L2 TCE
L3 TCE