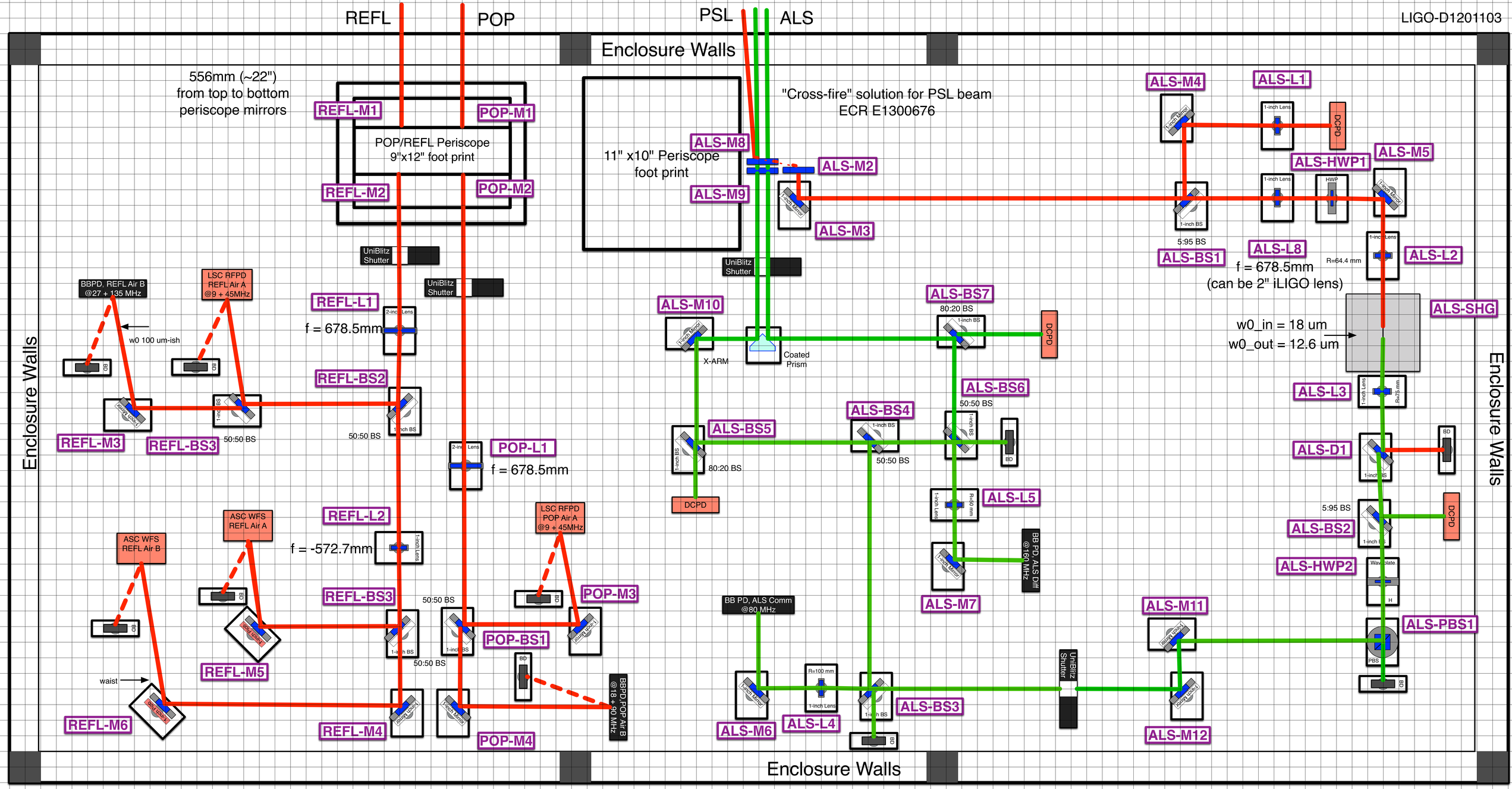
LIGO-D1201103
REFL
POP
PSL
ALS
Enclosure Walls
556mm (~22")
from top to bottom
periscope mirrors
REFL-M1
POP-M1
POP/REFL Periscope
9"x12" foot print
REFL-M2
POP-M2
11" x10" Periscope
foot print
"Cross-fire" solution for PSL beam
ECR E1300676
ALS-M8
ALS-M9
ALS-M2
ALS-M3
ALS-M4
ALS-L1
DCPD
ALS-HWP1
ALS-M5
5:95 BS
ALS-BS1
ALS-L8
f = 678.5mm
(can be 2" iLIGO lens)
R=64.4 mm
ALS-L2
ALS-SHG
w0_in = 18 um
w0_out = 12.6 um
ALS-L3
ALS-D1
5:95 BS
ALS-BS2
ALS-HWP2
ALS-PBS1
UniBlitz Shutter
BBPD, REFL Air B
@27 + 135 MHz
LSC RFPD
REFL Air A
@9 + 45MHz
w0 100 um-ish
REFL-L1
f = 678.5mm
REFL-BS2
50:50 BS
REFL-M3
REFL-BS3
50:50 BS
POP-L1
f = 678.5mm
ASC WFS
REFL Air B
ASC WFS
REFL Air A
REFL-L2
f = -572.7mm
LSC RFPD
POP Air A
@9 + 45MHz
REFL-BS3
50:50 BS
POP-M3
POP-BS1
50:50 BS
REFL-M5
waist
REFL-M6
REFL-M4
POP-M4
BBPD POP Air B
@18 + 90 MHz
ALS-M10
X-ARM
Coated
Prism
ALS-BS7
80:20 BS
DCPD
ALS-BS6
50:50 BS
ALS-BS4
50:50 BS
ALS-BS5
80:20 BS
DCPD
ALS-L5
BB PD, ALS Diff
@160 MHz
ALS-M7
BB PD, ALS Comm
@80 MHz
ALS-M6
ALS-L4
R=100 mm
ALS-BS3
ALS-M11
ALS-M12
Enclosure Walls
Enclosure Walls
4ft x 8ft optical table, scale = 1:1