REV.	DATE	DCN #	DRAWING TREE #
v1	4 Oct 2011	E1100979	-

NOTES CONTINUED:

4. ALL MACHINING FLUIDS MUST BE FULLY SYNTHETIC, FULLY WATER SOLUBLE AND FREE OF SULFUR, SILICONE AND CHLORINE.
5. SCRIBE, ENGRAVE, OR MECHANICALLY STAMP (NO INKS OR DYES) DRAWING PART NUMBER, REVISION (AND VARIANT OR "TYPE" IF APPLICABLE ON NOTED SURFACE OF PART FOLLOWED ON THE NEXT LINE WITH A THREE DIGIT SERIAL NUMBER. SERIAL NUMBERS START AT 001 FOR THE FIRST ARTICLE AND PROCEED CONSECUTIVELY. USE MINIMUM 0.12 HIGH CHARACTERS, UNLESS THE SIZE OF THE PART DICTATES SMALLER CHARACTERS. A VIBRATORY TOOL MAY BE USED. EXAMPLE DXXXXXXX-VY, TYPE-XX, S/N XXX.
6. APPROXIMATE WEIGHT = 0.095 LB.
7. MACHINE ALL SURFACES TO REMOVE OXIDES AND MILL FINISH, USE OF ABRASIVE REMOVAL TECHNIQUES (INCLUDING SANDING OR SCOURING FOR MATTE FINISH) IS NOT ALLOWED. USE OF SCOTCH-BRITE OR SIMILAR PRODUCTS IS FORBIDDEN.
8. ALL PARTS SHALL BE MANUFACTURED IN ACCORDANCE WITH LIGO SPECIFICATION E0900364.
9. ALL THREADED INSERTS TO BE INSTALLED BY LIGO PERSONNEL, AFTER DELIVERY OF FINISHED PARTS, USE NITRONIC 60 THREADED INSERTS.
10. ALL HELI-COIL TAPPED HOLES TO BE PREPARED ACCORDING TO EMHART HELI-COIL PRODUCT CATALOG HC2000 CURRENT REV.

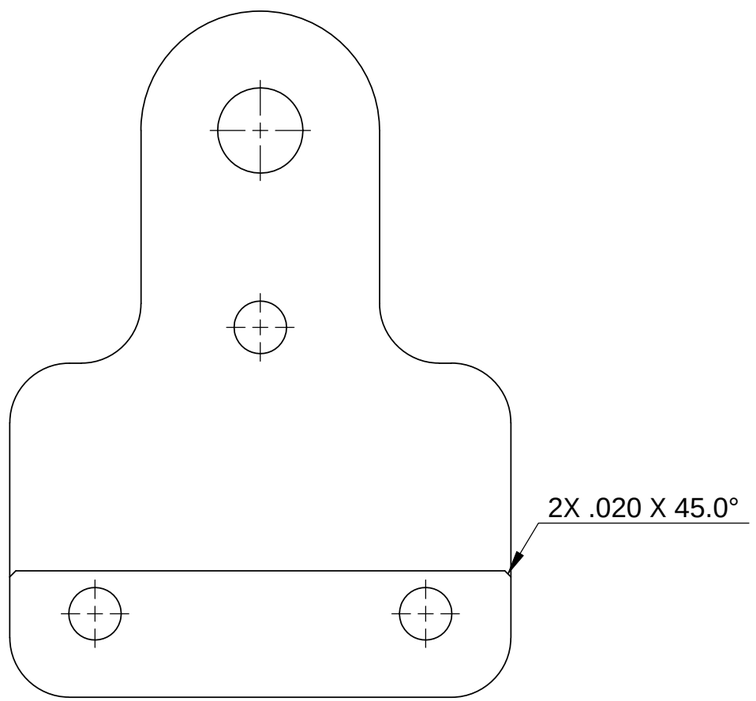

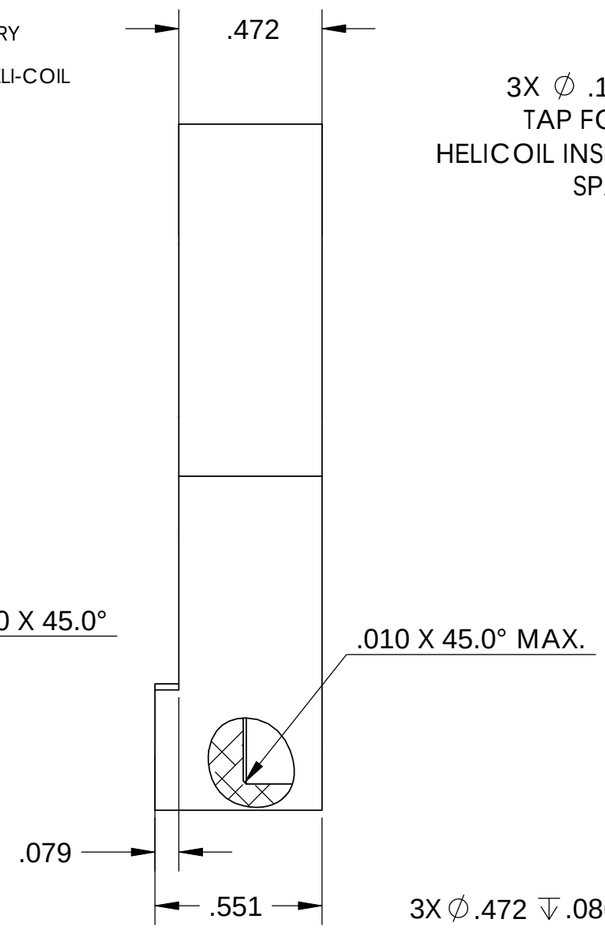

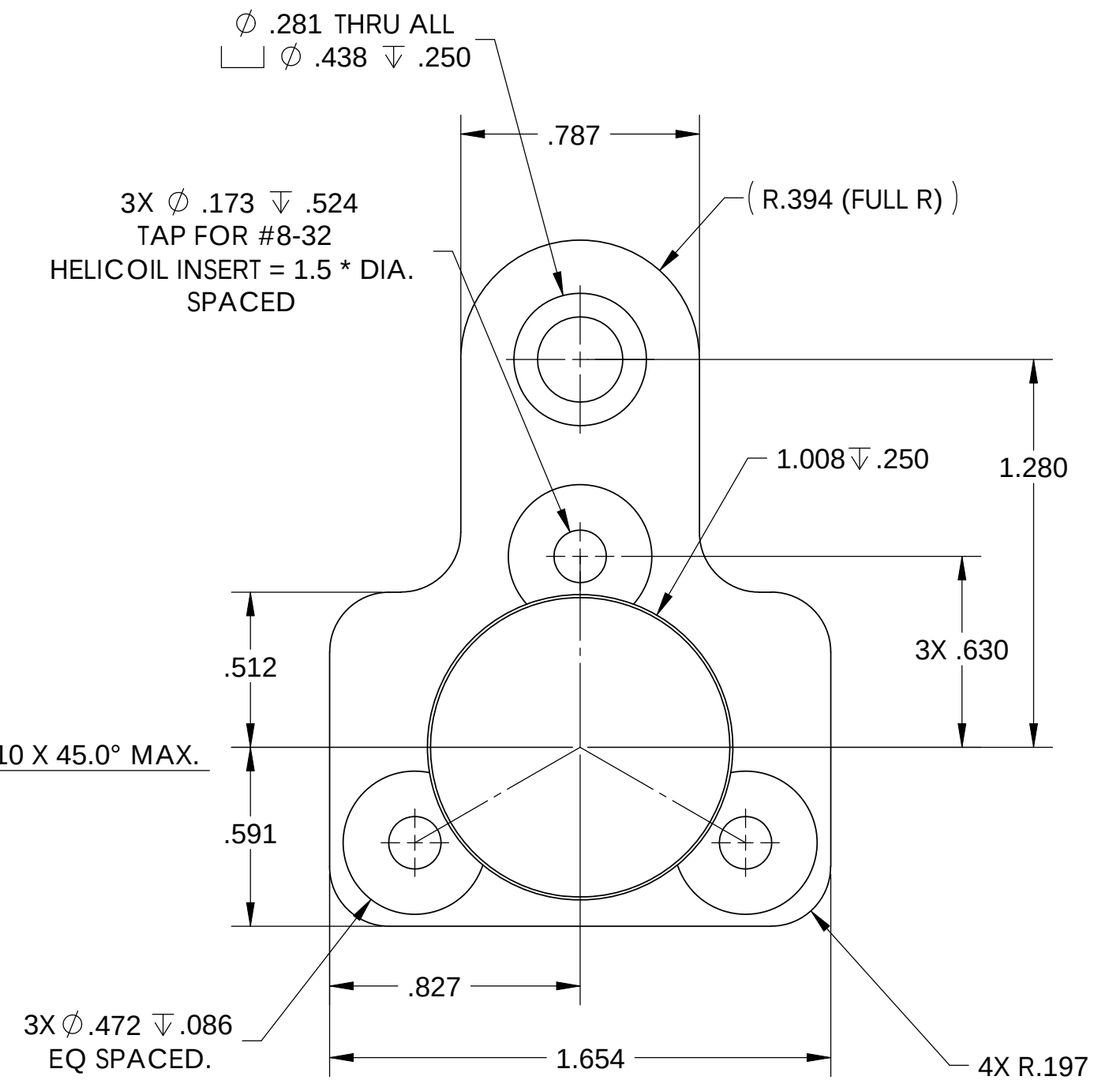

NOTES AND TOLERANCES: (UNLESS OTHERWISE SPECIFIED)

DIMENSIONS ARE IN INCHES

TOLERANCES:
.XX ± .015
.XXX ± .005

ANGULAR ± .5°

1. INTERPRET DRAWING PER ASME Y14.5-1994.
2. REMOVE ALL SHARP EDGES, .03 x 45°.
3. DO NOT SCALE FROM DRAWING.

MATERIAL: 6061-T6 Al

FINISH: 63 µinch

LIGO — CALIFORNIA INSTITUTE OF TECHNOLOGY, MASSACHUSETTS INSTITUTE OF TECHNOLOGY

SYSTEM: ADVANCED LIGO

SUB-SYSTEM: SUS

NEXT ASSY: D1101262

PART NAME: aLIGO SUS, ALIGNMENT MIRROR MOUNT, FM/DUMMY MASS, TOOLING

DESIGNER	M.HILLARD	4 Oct. 2011
DRAFTER	M.HILLARD	4 Oct 2011
CHECKER	-	4 Oct 2011
APPROVAL	-	4 Oct 2011

SIZE: B

DWG. NO.: D1101894

REV.: v1

SCALE: 2:1

PROJECTION:

SHEET 1 OF 1

D1101894, PART PDM REV: , DRAWING PDM REV: