PROCESS SYSTEMS INTERNATIONAL, INC.

WASHINGTON CORNER STATION

VERTEX SECTION

TAG NO.	*SER. NO.*
WBSC 1	09
WBSC 2	02
WBSC 3	03
WHAM 1	01
WHAM 2	03
WHAM 3	04
WHAM 4	05
WHAM 5	07
WHAM 6	02
WA3A	01
WA3B	02
WB3A	01
WB5A	01
WBE2A	01
WBE2B	02
WBE3A1	01
WBE3B	01

PSI Documentation No. V049-1-172
VOLUME 1

20 Walkup Drive • Westborough, Massachusetts 01581-5003 • 508/366-9111 • TLX 200294 • FAX 508/870-5930

PROCESS SYSTEMS INTERNATIONAL, INC.
20 Walkup Drive, Westborough, MA 01581

LIGO PROJECT

CALIFORNIA INSTITUTE OF TECHNOLOGY
MASSACHUSETTS INSTITUTE OF TECHNOLOGY

Table of Contents

TAG # WBSC - 01
P/N – VO49-4-003 S/N-09

1	C of C to applicable Codes and Standards Material test reports for shells, heads and large flanges. C of C for nozzles, small, parts and flanges.	
2	Vendor Quality Plan Doc. Package.	
3	Heat-Treat Charts (by Ranor) when applicable.	
4	Final Cleaning Certificate.	
5	Bakeout Certificate. Final Vacuum Test Report. Acceptance Test Data.	
6	Non Conformance Reports. Use as is when applicable.	
7	As Built Drawings/Dimensions.	

PROCESS SYSTEMS INTERNATIONAL, INC.
20 Walkup Drive, Westborough, MA 01581

CALIFORNIA INSTITUTE OF TECHNOLOGY ~ LIGO PROJECT
MASSACHUSETTS INSTITUTE OF TECHNOLOGY

CERTIFICATE OF CONFORMANCE

CUSTOMER:	The LIGO Project California Institute of Technology Mail Stop 18-34 Pasadena, CA 91125
DATE:	12/15/97
CONTRACT ORDER NUMBER:	PC 175730
PSI JOB NUMBER:	V59049
DRAWING NUMBER(S):	V049 4 003
TAG NUMBER:	WBSC 01
SERIAL NUMBER:	09
ITEM:	Refer to attached Material Tracer Record
APPLICABLE SPECIFICATION(S):	SA-240 A-500 SA-193 B7 SA-194 2H F-436

PSI certifies that the items furnished in this shipment have been manufactured from the materials and in accordance with the process test and acceptance criteria requirements specified within the drawing(s) and/or specification(s) listed above. All inspection records and test results are on file with PSI and are available for examination.

Gene Senecal 12-15-97
Gene Senecal
Quality Assurance Engineer

F:\HV\LIGO\CORRESPO\SENECAL:COC-FORM

Material Tracer Record

Part Number WBSC 01 S/N 09

Item #	Qty	U/M	Part code	Description	C of C MIC # CMTR
1	1	EA	V049M001 1	HEAD SST304L SA240 CMTR ASME FLGD & DISHED 104.5 ID .344 MIN THK (3/8 NOM. THK) 105 DISH RAD 6-1/2 INSIDE CORNER RAD WITH 2 S.F. APPROX OVERALL HEIGHT 20.08 COLD FORMED-DIP PICKLED	A 971
3	1	EA	V049P7801 14	PLATE SST GR304/304L SA240 CMTR 1/2 X91-1/2 X333 PER SPEC V0492041	B 699
4	1	EA	V049P7802 14	PLATE SST GR304/304L SA240 CMTR 1/4 X60 X332 LG PER SPEC V0492041	B 712
5	1	EA	V049M003 1	FLANGE SST F304L SA182 CMTR FORGED BLANK ASME CODE 1992 EDITION THRU 1994 ADDENDA MACHINED TO 1-1/2 +.06 THK 112-1/2 +.06 ODX104.25 -.06 ID FINISH 250/500 PER SPEC V0492040	A 600
6	1	EA	V049M004 1	FLANGE SST F304L SA182 CMTR FORGED BLANK ASME CODE 1992 EDITION THRU 1994 ADDENDA MACHINE TO 1-1/4 +.06 THK 112-1/2 +.06 ODX104.25 -.06 ID FINISH 250/500 PER SPEC V0492040	B 366
7	4	EA	V049M135 1	FLANGE SST F304L SA182 CMTR FORGED BLANK ASME CODE 1992 EDITION THRU 1994 ADDENDA MACHINE TO 1-5/8 +.06 THK 68-1/2+.06 OD X 60.0 -.06 ID FINISH 250/500 PER SPEC V0492040	B 682
9	8	EA	V049M309 3	FLANGE SST304L COFC HALF NIPPLE CONFLAT NON ROT. 16-1/2 ODX14 OD TUBEX.120WT 5 OVERALL HEIGHT .390 DIA THRU 36 HOLES EQ.SP. ON A 15.310 DIA B.C.	C of C

Material Tracer Record

Part Number WBSC 01 S/N 09

10	6	EA	V049M311 3	FLANGE SST304L COFC HALF NIPPLE CONFLAT NON ROT. 12 OD X 10 OD TUBEX.120WT 5 OVERALL HEIGHT .332 DIA THRU 32 HOLES EQ. SP. ON A 11.181 DIA B.C.	C of C
11	12	EA	V049M320 1	FLANGE SST304L CMTR HALF NIPPLE CONFLAT NON ROT. 10 ODX8 OD TUBE X .250 WT 5 OVER ALL HEIGHT .332 DIA THRU 24 HOLES EQ.SP. ON A 9.128 DIA B.C.	C of C
12	1	EA	V049P7803 14	PLATE SST GR304/304L SA240 CMTR 1/2 X72 X195 LG PER SPEC V0492041	A 954 A 487
13	4	EA	V049M324 3	FLANGE SST304L COFC HALF NIPPLE CONFLAT NON ROT. 16-1/2 ODX14 ODTUBEX.120WT 16-1/2 OVERALL HEIGHT .390 DIA THRU 36 HOLES EQ. SP. ON A 15.310 DIA B.C.	C of C
14	1	EA	V049M010 1	HEAD SST304L SA240 CMTR ASME FLGD & DISHED 104.5 ID .344 MIN THK (3/8 NOM. THK) 105 DISH RAD 6-1/2 INSIDE CORNER RAD WITH 2 S.F. APPROX OVERALL HEIGHT 20.08 COLD FORMED-DIP PICKLED	B 695
15	30	FT	V0494001P17 1	BAR SST304 SA276 CMTR FL CMTR .375X4	C of C
16	2	EA	V049M880 1	PLATE SST304 SA240 CMTR .75 THK X 36 X 20	C of C
17	30	FT	V0494001P18	ANGLES (L) SST 304 CMTR .250X4	C of C
18	1	EA	V0494001P19 1	PLATE SST304L SA240 CMTR ½ THK X 20-1/2 DIA (MAKE FROM 60 PORT CUT OUT SLUG V049P7801 14)	C of C
19	2	EA	V0494001P21 14	PLATE SST304L SA240 CMTR ½ THK NOTE: (QTY 2 -USE DROP FROM P/N V049P7801 14) CMTR REQUIRED	C of C
20	4	EA	V0494001P15 14	PLATE SST304L SA240 CMTR ½ THK NOTE:(QTY 4 - USE DROP FROM P/N V049P7801 14)	C of C

Material Tracer Record

Part Number WBSC 01 S/N 09

21	25	FT	C387706-1D 1	BAR SA479 304L CMTR FL .375X1.5	C of C
22	2	FT	V0494003P22 1	BAR SST 304/304L SA240 CMTR CMTR FL 1/4 X 2.5	C of C
47	55	EA	202678 3	BOLT STL SA193 B7 COFC HEX HD 7/8-9 UNC X 4 LG ZINC PLATED .0002 MIN THK.CLEAR CHROMATE	C of C
48	55	EA	202679 3	NUT STL SA194 2H COFC HEX HD 7/8-9 UNC ZINC PLATED .0002 MIN THK CLEAR CHROMATE PROCESS	C of C
49	115	EA	202581 3	WASHER STL ASTM F436 COFC 1-3/4 ODX15/16 IDX1/4 THK ELECTROLESS NICKEL PLATED	C of C
50	2	EA	V0494001P50 14	PLATE SST304L SA240 CMTR 1/2 THK (NOTE QTY 2 - USE DROP FROM P/N V049P7801 14) CMTR REQUIRED	C of C
51	28	EA	V049M126 1	BAR SST304 SA479 CMTR FL .50 X2.0	C of C
52	4	FT	V049M127 1	BAR SST304 SA479 CMTR FL CMTR .375 X2.0	C of C
55	4	SF	V049M130 14	PLATE SST304 SA240 CMTR 1/2 THK CUT FROM DROP NOTE: (QTY 4 SF - USE DROP FROM P/N V049P7803 14)	C of C
63	1	EA	V0494003P63 14	PLATE SST304 SA240 CMTR 1/2 THK CUT FROM DROP V049P7801 14	C of C
64	4	EA	V049M501 3	ELBOW SST304L 90DEG 1 ODX.065 WT BTWLD COFC	C of C
65	4	EA	V049M601 3	REDUCER SST304L COFC CONC BTWLD 1 ODX ¾ ODX.065 WT	C of C
66	2	EA	V049M601 3	REDUCER SST304L COFC CONC BTWLD 1 ODX 3/4 ODX.065 WT	C of C
67	2	EA	V049M605 3	ELBOW SST304L COFC 45 DEG BTWLD 3/4 OD X .035WT	C of C
68	6	EA	V049M508 3	ELBOW SST304L COFC 90 DEG BW 3/4 OD X .065 WT	C of C

Material Tracer Record

Part Number WBSC 01 S/N 09

1	1	EA	V049M002 1	HEAD SST304L SA240 CMTR ASME FLGD & DISHED 60.5 ID .22 MIN. THK. (1/4 NOM. THK) 60-1/2 DISH RAD 3-3/4 INSIDE CORNER RADIUS WITH 2 S.F. APPROX OVERALL HEIGHT 12.56 COLD FORMED-DIP PICKLED	B 709
2	1	EA	V049M243 1	FLANGE SST F304L SA182 CMTR FORGED BLANK ASME CODE 1992 EDITION THRU 1994 ADDENDA MACHINE TO 1-1/4 +.06 THK 68.50 +.06 OD X 60.00 -.06 ID FINISH 250/500 PER SPEC V0492040	A 861 A 914
3	5	EA	V049M220 1	FLANGE SST304L CMTR HALF NIPPLE CONFLAT NON ROT. 10 OD X 8 OD TUBE X 1/4 WT 3-1/8 OVER ALL HEIGHT .332 DIA 24 HOLES EQ. SP. ON A 9.128 DIA. B.C.	C of C
4	4	FT	C387904-F 3	BAR SA479 TP304 CofC FL .250X0.75	C of C
2	1	EA	V0494025	BSC ANNULUS PIPING	C of C
4	1	EA	V0494204	BSC AIR FILTER ASSY	C of C
5	1	EA	202667 3	FLANGE SST304L COFC CONFLAT BLANK 10 OD NON ROT. .332 DIA THRU 24 HOLES EQ. SP. ON A 9.128 DIA B.C.	C of C
6	1	EA	202671 3	GASKET COP OFHC COFC CONFLAT 10 OD FLANGE	C of C
7	24	EA	V049M777	BOLT SST 18-8 HEX HD 5/16 -18 X2-1/2 LG.	C of C
8	24	EA	V049M782	NUT SILICON BRZ HEX 5/16 -18	C of C
9	48	EA	V049M785	WASHER SST 18-8 FLAT 5/16	C of C
5	2	EA	V0494142P2 3	FLANGE SST304L COFC CONFLAT REDUCING PER DETAIL B DWG V049-4-142 WITH 4 1/2X 2 1/2 CONFLAT BORE AND TAPPED HOLES WITH 4 1/2X2 1/2 CONFLAT BLANK GASKET AND HARDWARE	C of C

Material Tracer Record

Part Number WBSC 01 S/N 09

9	515	EA	V049M777	BOLT SST 18-8 HEX HD 5/16 -18 X21/2	C of C
10	515	EA	V049M782	NUT SILICON BRZ HEX 5/16 -18	C of C
11	###	EA	V049M785	WASHER SST 18-8 FLAT 5/16	C of C
12	1	EA	V049M307 3	FLANGE SST304L COFC CONFLAT NON-ROTATABLE 2-3/4 OD BLANK	C of C
13	1	EA	V049M751 3	GASKET OFHC COP COFC 2-3/4 OD CONFLAT PER SPEC V049-2-037/T4	C of C
14	6	EA	V049M775	BOLT SST 18-8 HEX HD 1/4-20 X 1-1/2	C of C
15	6	EA	V049M781	NUT SILICON BRZ HEX 1/4-20	C of C
16	12	EA	V049M784	WASHER SST 18-8 FLAT 1/4	C of C
31	10	EA	202666 3	FLANGE SST304L COFC CONFLAT BLANK 16-1/2 OD NON ROT. .390 DIA THRU 36 HOLES EQ. SP. ON A 15.310 DIA B.C.	C of C
32	6	EA	202549 3	FLANGE SST304L COFC CONFLAT 12 OD BLANK NON ROT. .332 DIA THRU HOLES 32 PLACES EQ. SP. ON A 11.181 DIA. B.C.	C of C
33	21	EA	202667 3	FLANGE SST304L COFC CONFLAT BLANK 10 OD NON ROT. .332 DIA THRU 24 HOLES EQ. SP. ON A 9.128 DIA B.C.	C of C
37	11	EA	202670 3	GASKET COP OFHC COFC CONFLAT 16-1/2 OD FLANGE	C of C
38	6	EA	202552 3	GASKET COP OFHC COFC CONFLAT 12 OD FLANGE	C of C
39	21	EA	202671 3	GASKET COP OFHC COFC CONFLAT 10 OD FLANGE	C of C
40	440	EA	V049M780	BOLT SST 18-8 HEX HD 3/8 -16 X3 LG	C of C
43	1	EA	V049M016	O'RING VITON A500 BAKED .275 NOM X 337-1/2 LG VULCANIZED	C of C
44	1	EA	V049M017	O'RING VITON A500 BAKED .275 NOM X 328-1/8 LG VULCANIZED	C of C
45	4	EA	V049M023	O'RING VITON A500 BAKED .275 NOM X 191-1/4 LG VULCANIZED	C of C

Material Tracer Record

Part Number WBSC 01 S/N 09

46	4	EA	V049M022	O'RING VITON A500 BAKED .275 NOM X 200-5/8 LG VULCANIZED	C of C
47	120	EA	202678 3	BOLT STL SA193 B7 COFC HEX HD 7/8-9 UNC X 4 LG ZINC PLATED .0002 MIN THK.CLEAR CHROMATE	C of C
48	120	EA	202679 3	NUT STL SA194 2H COFC HEX HD 7/8-9 UNC ZINC PLATED .0002 MIN THK CLEAR CHROMATE	C of C
49	240	EA	202581 3	WASHER STL ASTM F436 COFC 1-3/4 ODX15/16 IDX1/4 THK ELECTROLESS NICKEL PLATED	C of C
50	440	EA	V049M783	NUT SILICON BRZ HEX 3/8 -16	C of C
51	880	EA	V049M786	WASHER SST 18-8 FLAT 3/8	C of C
4	1	EA	V0494142P1 3	FLANGE SST304L COFC CONFLAT REDUCING PER DETAIL A DWG V049-4-142 WITH 4 1/2X 2 1/2 CONFLAT NIPPLE BLANK GASKET AND HARDWARE WITH 2 3/4 X 1 1/2 CONFLAT NIPPLE BLANK GASKET AND HARDWARE	C of C
5	1	EA	V0494142P2 3	FLANGE SST304L COFC CONFLAT REDUCING PER DETAIL B DWG V049-4-142 WITH 4 1/2X 2 1/2 CONFLAT BORE AND TAPPED HOLES WITH 4 1/2X2 1/2 CONFLAT BLANK GASKET AND HARDWARE	C of C
9	560	EA	V049M777	BOLT SST18-8 HEX HD 5/16 -18 X2-1/2	C of C
10	560	EA	V049M782	NUT SILICON BRZ HEX 5/16 -18	C of C
11	###	EA	V049M785	WASHER SST 18-8 FLAT 5/16	C of C
12	1	EA	V049M307 3	FLANGE SST304L COFC CONFLAT NON-ROTATABLE 2-3/4 OD BLANK	C of C
13	1	EA	V049M751 3	GASKET OFHC COP COFC 2-3/4 OD CONFLAT PER SPEC V049-2-037/T4	C of C

Material Tracer Record

Part Number WBSC 01 S/N 09

14	6	EA	V049M775	BOLT SST18-8 HEX HD 1/4-20 X 1-1/2	C of C
15	6	EA	V049M781	NUT SILICON BRZ HEX 1/4-20	C of C
16	12	EA	V049M784	WASHER SST 18-8 FLAT 1/4	C of C
31	10	EA	202666 3	FLANGE SST304L COFC CONFLAT BLANK 16-1/2 OD NON ROT. .390 DIA THRU 36 HOLES EQ. SP. ON A 15.310 DIA B.C.	C of C
32	6	EA	202549 3	FLANGE SST304L COFC CONFLAT 12 OD BLANK NON ROT. .332 DIA THRU HOLES 32 PLACES EQ. SP. ON A 11.181 DIA. B.C.	C of C
33	16	EA	202667 3	FLANGE SST304L COFC CONFLAT BLANK 10 OD NON ROT. .332 DIA THRU 24 HOLES EQ. SP. ON A 9.128 DIA B.C.	C of C
37	12	EA	202670 3	GASKET COP OFHC COFC CONFLAT 16-1/2 OD FLANGE MATERIAL	C of C
38	6	EA	202552 3	GASKET COP OFHC COFC CONFLAT 12 OD FLANGE	C of C
39	16	EA	202671 3	GASKET COP OFHC COFC CONFLAT 10 OD FLANGE	C of C
40	440	EA	V049M780	BOLT SST 18-8 HEX HD 3/8 -16 X3 LG	C of C
43	1	EA	V049M016	O'RING VITON A500 BAKED .275 NOM X 337-1/2 LG VULCANIZED	C of C
44	1	EA	V049M017	O'RING VITON A500 BAKED .275 NOM X 328-1/8 LG VULCANIZED	C of C
45	4	EA	V049M023	O'RING VITON A500 BAKED .275 NOM X 191-1/4 LG VULCANIZED PER SPEC V049-2-045	C of C
46	4	EA	V049M022	O'RING VITON A500 BAKED .275 NOM X 200-5/8 LG VULCANIZED PER SPEC V049-2-045	C of C
47	120	EA	202678 3	BOLT STL SA193 B7 COFC HEX HD 7/8-9 UNC X 4 LG ZINC PLATED .0002 MIN THK.CLEAR CHROMATE	C of C
48	120	EA	202679 3	NUT STL SA194 2H COFC HEX HD 7/8-9 UNC ZINC PLATED .0002 MIN THK CLEAR CHROMATE PROCESS	C of C

Material Tracer Record

Part Number WBSC 01 S/N 09

49	240	EA	202581 3	WASHER STL ASTM F436 COFC 1-3/4 ODX15/16 IDX1/4 THK ELECTROLESS NICKEL PLATED CERTIFICATE OF COMPLIANCE REQUIRED	C of C
50	440	EA	V049M783	NUT SILICON BRZ HEX 3/8 -16	C of C
51	880	EA	V049M786	WASHER SST 18-8 FLAT 3/8	C of C
4	1	EA	V0494204	BSC AIR FILTER ASSY	C of C
5	1	EA	202667 3	FLANGE SST304L COFC CONFLAT BLANK 10 OD NON ROT. .332 DIA THRU 24 HOLES EQ. SP. ON A 9.128 DIA B.C.	C of C
6	1	EA	202671 3	GASKET COP OFHC COFC CONFLAT 10 OD FLANGE	C of C
7	24	EA	V049M777	BOLT SST 18-8 HEX HD 5/16 -18 X2-1/2 LG.	C of C
8	24	EA	V049M782	NUT SILICON BRZ HEX 5/16 -18	C of C
9	48	EA	V049M785	WASHER SST 18-8 FLAT 5/16	C of C

Avesta Sheffield

Avesta Sheffield East, Inc.

PSI MIC NO. **A487**

Certificate of Analysis and Tests

OUR ORDER 84643 - 06 HEAT & PIECE 39734-2A 8/12/96

SOLD TO: PROCESS SYSTEMS INTERNATIONAL
20 WALKUP DRIVE
WESTBOROUGH MA 01581

SHIP TO: PROCESS SYSTEMS INTERNATIONAL
20 WALKUP DRIVE
WESTBORO MA 01581
737001-01

---------- YOUR ORDER & DATE ----------

555-477 ✓ 6/17/96

---------- ITEM DESCRIPTION ----------

HEAT & PIECE 39734 - 2A ✓
WEIGHT 2121

FINISH ✓ 1 ✓
GRADE 304L / 304 UNS-S30403 / UNS-S30400
DIMENSIONS .500 ✓ X 72.187 ✓ X 195.312 ✓ EXACT

PROCESS SYSTEMS INT'L., INC.
Reviewed this report and it complies
with SA/SB 240 Gr. 304L-304
95 Edition, — Addenda
By SS Date 8-27-96

---------- SPECIFICATIONS ----------

V049-2-041 REV0 WITH EXCEPTS
ASTM A480-94B, ASME SA480-95
COUPONS REQUIRED
ASTM A262-93 PRAC A

ASTM A240-95B, ASME SA240-95 ✓
NO GRIP MARKS-NO WELD REPAIR ✓
ASTM A262-93 PRAC E

PLATES & TEST PCS SOLUTION ANNEALED @ 1950 DEGREES FARENHEIT MINIMUM.
THEN WATER COOLED OR RAPIDLY COOLED BY AIR
FREE OF MERCURY CONTAMINATION
HOT ROLLED, ANNEALED & PICKLED (HRAP) ✓

---------- MECHANICAL & OTHER TESTS ----------

HARDNESS RB	87 ✓
GRAIN SIZE	5
YIELD STRENGTH (PSI)	42400 ✓
TENSILE STRENGTH (PSI)	84000 ✓
BEND	OK
INTERGRANULAR CORROSION	OK
ELONGATION % IN 2"	58.0 ✓
REDUCTION OF AREA %	68.0

---------- CHEMICAL COMPOSITION ----------

CARBON	(C)	.015 ✓
MANGANESE	(MN)	1.50 ✓
PHOSPHORUS	(P)	.029 ✓
SULFUR	(S)	.001 ✓
SILICON	(SI)	.39 ✓
CHROMIUM	(CR)	18.51 ✓
NICKEL	(NI)	8.58 ✓
COBALT	(CO)	.11
COPPER	(CU)	.45
MOLY	(MO)	.40 ✓
NITROGEN	(N)	.06 ✓

KNOWINGLY & WILLFULLY FALSIFYING OR CONCEALING A MATERIAL FACT ON THIS FORM, OR MAKING FALSE, FICTITIOUS OR FRAUDULENT STATEMENTS OR REPRESENTATIONS HEREIN COULD CONSTITUTE A FELONY PUNISHABLE UNDER FEDERAL STATUTES.

J. BONGARDT, LAB MANAGER

P.O. BOX 1975
Baltimore, Maryland 21203
Telephone: (410) 522-6200

Tel: 717-248-4911

METALLURGICAL CERTIFICATION PAGE 1

STANDARD STEEL
QP090-F1
A Division of FREEDOM FORGE Corporation

FOR: PROCESS SYS INT MA
CUSTOMER ORDER NUMBER 555492
REPORT DATE: 10/30/96

PCS SHIPPED: 24
02 OUR ORDER NO 432620502
SHIPLIST NO: 58598
PSI MIC NO. A914

IT-26

PRODUCT

RING V049M243-1
MACHINE 250/500 MICRO TO SIZES SHOWN: 60.50" OD +.06 X 60.0" ID -.06 X 1.250" Wa +.06
SPECIFICATION: ASME SA182 GRADE F304L IN ACCORDANCE WITH PROCESS SYSTEMS SPEC.
AV049-2-040 REV 6

CUSTOMER

PROCESS SYSTEMS INTERNATIONAL, INC.
20 WALKUP DRIVE
WESTBOROUGH MA 01581
ATTENTION:

CHEMICAL ANALYSIS

T NO.	C	SI	P	MN	S	NI	CR	MO	V	AL	TI				
09281	.013	.50	.030	1.81	.002	11 64	19.13			N .0600					

MECHANICAL PROPERTIES

EAT MBER	SERIAL NUMBER	BRINELL	TEN TEMP (F)	TEN BHN	TENSILE LOCATION	UTS (KSI)	YIELD ST (KSI) .20XOFST	X ELONG	XRED AREA	IMPACT DATA LOCATION	TEMP (F)	FT. LBS	X SHR	LAT EXP	GRN SZE
09281	6I1427D		+75		PROLONG	79.0	34.5	61.0	77.0						
09281	6I1427E														
09281	6I1428A														
09281	6I1428B														
09281	6I1426C														
09281	6I1428D														
09281	6I1428E														

PROCESS SYSTEMS INT'L., INC.
Reviewed this report and it complies
with SA/SB- 182 Gr. 304L
95 Edition, — Addenda
By C. Wotarski Date 11-5-96

Burnham, PA 17009
Tel: 717-248-4911

STANDARD STEEL
QP090-F1
A Division of Freedom Forge Corporation

METALLURGICAL CERTIFICATION

FOR: PROCESS SYS INT MA
CUSTOMER ORDER NUMBER 555492
REPORT DATE: 10/10/96

PCS SHIPPED: 3
02 OUR ORDER NO 432620502
SHIPLIST NO: 57865

PSI MIC NO. A861

PRODUCT

RING V049M243-1
MACHINE 250/500 MICRO TO SIZES SHOWN: 60.50" OD +.06 X 60.0" ID -.06 X 1.250" WD
SPECIFICATION: ASME SA182 GRADE F304L IN ACCORDANCE WITH PROCESS SYSTEMS SPEC.
AV049-2-040 REV 6

CUSTOMER

PROCESS SYSTEMS INTERNATIONAL, INC.
20 WALKUP DRIVE
WESTBOROUGH MA 01581
ATTENTION:

PROCESS SYSTEMS INT'L., INC.
Reviewed this report and it complies
with SA/SB 182 Gr. 304L
95 Edition, — Addenda
By C Wozicki Date 10-24-96

CHEMICAL ANALYSIS

HEAT NO.	C	SI	P	MN	S	NI	CR	MO	V	AL	TI				
509280	✓ .031	✓ .45	✓ .032	✓ 1.72	✓ .001	✓ 11.48	✓ 18.55				N .0500				

MECHANICAL PROPERTIES

HEAT NUMBER	SERIAL NUMBER	BRINELL	TEN TEMP (F)	TEN BHN	TENSILE LOCATION	UTS (KSI)	YIELD ST (KSI) .20XOFST	X ELONG	XRED AREA	IMPACT DATA LOCATION	TEMP (F)	FT. LBS	X SHR	LAT EXP	GRN SIZE
509280	6G2745C		+75		PROLONG	74.5 ✓	36.5 ✓	44.0 ✓	79.0						
509280	6G2745E														
509280	6G2747E														

TYPE OF HEAT TREATMENT: SOLUTION TREATED AND QUENCHED

THIS REPORT CERTIFIES THAT THE ABOVE RESULTS ARE
CORRECT AS REPORTED AND CONTAINED IN THE COMPANY RECORDS

D.W. Kolb
MGR. LABORATORIES

Avesta Sheffield

Avesta Sheffield Plate Inc. PSI MIC NO. **B709**

Certificate of Analysis and Tests

OUR ORDER 86007 - 11 HEAT & PIECE 47943-2B 11/16/96

SOLD TO: PROCESS SYSTEMS INTERNATIONAL
20 WALKUP DRIVE
WESTBOROUGH MA 01581

SHIP TO: RANOR, INC.
BELLA DRIVE
ATTN: TOM ZIOBROWSKI
WESTMINSTER MA 01473
737001-03

---------- YOUR ORDER & DATE ----------

555477 8/02/96 TAG# V049P7815

---------- ITEM DESCRIPTION ----------

HEAT & PIECE 47943 - 2B
WEIGHT 3101
FINISH 1
GRADE 304L / 304 UNS-S30403 / UNS-S30400
DIMENSIONS .500 X 76.250 X 270.375 EXACT

---------- SPECIFICATIONS ----------

V049-2-041 REV0 WITH EXCEPTS
ASTM A480-94B, ASME SA480-95
COUPONS REQUIRED
ASTM A262-93 PRAC A

ASTM A240-95B, ASME SA240-95
NO GRIP MARKS-NO WELD REPAIR
ASTM A262-93 PRAC E

PLATES & TEST PCS SOLUTION ANNEALED @ 1950 DEGREES FARENHEIT MINIMUM.
THEN WATER COOLED OR RAPIDLY COOLED BY AIR
FREE OF MERCURY CONTAMINATION
HOT ROLLED, ANNEALED & PICKLED (HRAP)

---------- MECHANICAL & OTHER TESTS ----------

HARDNESS RB	83
YIELD STRENGTH (PSI)	37828 ✓
TENSILE STRENGTH (PSI)	84084 ✓
BEND	OK
INTERGRANULAR CORROSION	OK
ELONGATION % IN 2"	63.1 ✓
REDUCTION OF AREA %	75.6

---------- CHEMICAL COMPOSITION ----------

CARBON	(C)	.014 ✓
MANGANESE	(MN)	1.52 ✓
PHOSPHORUS	(P)	.030 ✓
SULFUR	(S)	.001 ✓
SILICON	(SI)	.29 ✓
CHROMIUM	(CR)	18.36 ✓
NICKEL	(NI)	8.64 ✓
COBALT	(CO)	.16
COPPER	(CU)	.45
MOLY	(MO)	.46
NITROGEN	(N)	.06

PROCESS SYSTEMS INT'L., INC.
Reviewed this report and it complies
with SA/SB- 240 Gr 304/304L
95 Edition, 96 Addenda
C. Wotecki Date 9-11-97

KNOWINGLY & WILLFULLY FALSIFYING OR CONCEALING A MATERIAL FACT ON THIS FORM, OR MAKING FALSE, FICTITIOUS OR FRAUDULENT STATEMENTS OR REPRESENTATIONS HEREIN COULD CONSTITUTE A FELONY PUNISHABLE UNDER FEDERAL STATUTES.

A. L. TRISSLER, LAB TESTING MANAGER

Avesta Sheffield Plate Inc.
P.O. Box 370
New Castle, Indiana 47362

IT-39

Avesta Sheffield East, Inc. PSI MIC NO. **A954**

Certificate of Analysis and Tests

OUR ORDER 86013 - 09 HEAT & PIECE 48945-1A 11/08/96

SOLD TO: PROCESS SYSTEMS INTERNATIONAL
20 WALKUP DRIVE
WESTBOROUGH MA 01581

SHIP TO: RANOR, INC.
BELLA DRIVE
ATTN: TOM ZIOBROWSKI
WESTMINSTER MA 01473
737001-03

---------- YOUR ORDER & DATE ----------

555477 8/02/96 TAG# V049P7803-14

---------- ITEM DESCRIPTION ----------

HEAT & PIECE 48945 - 1A -2A -3A -4A -5A
WEIGHT 2121

FINISH 1
GRADE 304L / 304 UNS-S30403 / UNS-S30400
DIMENSIONS .500 X 72.188* X 195.313 EXACT

---------- SPECIFICATIONS ----------

V049-2-041 REV0 WITH EXCEPTS
ASTM A480-94B, ASME SA480-95
COUPONS REQUIRED
ASTM A262-93 PRAC A

ASTM A240-95B, ASME SA240-95
NO GRIP MARKS-NO WELD REPAIR
ASTM A262-93 PRAC E

PLATES & TEST PCS SOLUTION ANNEALED @ 1950 DEGREES FARENHEIT MINIMUM.
THEN WATER COOLED OR RAPIDLY COOLED BY AIR
FREE OF MERCURY CONTAMINATION
HOT ROLLED, ANNEALED & PICKLED (HRAP)

---------- MECHANICAL & OTHER TESTS ----------

HARDNESS RB	83
GRAIN SIZE	5
YIELD STRENGTH (PSI)	42300 ✓
TENSILE STRENGTH (PSI)	82600 ✓
BEND	OK
INTERGRANULAR CORROSION	OK
ELONGATION % IN 2"	62.0 ✓
REDUCTION OF AREA %	68.0

PROCESS SYSTEMS INT'L., INC.
Reviewed this report and it complies with SA/SB- 240 Gr 304/304L
95 Edition, ____ Addenda
By C. Wojcicki Date 11-14-96

---------- CHEMICAL COMPOSITION ----------

CARBON	(C)	.010 ✓
MANGANESE	(MN)	1.42 ✓
PHOSPHORUS	(P)	.031 ✓
SULFUR	(S)	.002 ✓
SILICON	(SI)	.15 ✓
CHROMIUM	(CR)	18.18 ✓
NICKEL	(NI)	9.19 ✓
COBALT	(CO)	.12
COPPER	(CU)	.50
MOLY	(MO)	.41
NITROGEN	(N)	.05 ✓

KNOWINGLY & WILLFULLY FALSIFYING OR CONCEALING A MATERIAL FACT ON THIS FORM, OR MAKING FALSE, FICTITIOUS OR FRAUDULENT STATEMENTS OR REPRESENTATIONS HEREIN COULD CONSTITUTE A FELONY PUNISHABLE UNDER FEDERAL STATUTES.

J. BONGARDT, LAB MANAGER

P.O. BOX 1975
Baltimore, Maryland 21203
Telephone: (410) 522-6200

STANDARD STEEL
A Division of FREEDOM FORGE Corporation

FOR: PROCESS SYS INT MA
CUSTOMER ORDER NUMBER 555492
REPORT DATE: 10/14/96

PCS SHIPPED: 24
04 OUR ORDER NO 432620501
SHIPLIST NO: 57948

IT-23

PRODUCT

RING
MACHINE 250/500 MICRO TO SIZES SHOWN: 68.5" OD +.06 X 60.0" ID -.06 X 1.625" WD (*) V049M135-1
SPECIFICATION: ASME SA182 GRADE F304L IN ACCORDANCE WITH PROCESS SYSTEMS SPEC.
AV049-2-040 REV 6
(*) +.06

PSI MIC NO. B682

CUSTOMER

PROCESS SYSTEMS INTERNATIONAL, INC.
20 WALKUP DRIVE
WESTBOROUGH MA 01581
ATTENTION:

CHEMICAL ANALYSIS

HEAT NO.	C	SI	P	MN	S	NI	CR	MO	V	AL	TI				
S09281	.013	.58	.030	1.81	.002	11.64	19.13				N .0600				

MECHANICAL PROPERTIES

HEAT NUMBER	SERIAL NUMBER	BRINELL	TEN TEMP (F)	TEN DHN	TENSILE LOCATION	UTS (KSI)	YIELD ST (KSI) .20%OFST	% ELONG	%RED AREA	IMPACT DATA LOCATION	TEMP (F)	FT. LBS	% SHR	LAT EXP	GRN SIZE
S09281	6I1421A		+75		PROLONG	73.9	34.5	61.0	77.0						
S09281	6I1421B														
S09281	6I1421C														
S09281	6I1421D														
S09281	6I1421E														
S09281	6I1422A														
S09281	6I1422B														
S09281	6I1422C														
S09281	6I1422D														
S09281	6I1423A														
S09281	6I1423B														
S09281	6I1423C														
S09281	6I1423D														
S09281	6I1423E														
S09281	6I1424A														
S09281	6I1424B														
S09281	6I1424C														
S09281	6I1424D														
S09281	6I1424E														
S09281	6I1425A														
S09281	6I1425B														
S09281	6I1425C														
S09281	6I1425D														
S09281	6I1425E														

IT-23 IT-23 IT-23 DC

TYPE OF HEAT TREATMENT: SOLUTION TREATED AND QUENCHED

PROCESS SYSTEMS INT'L, INC.
Reviewed this report and it complies with SA/SB- 182 Gr. 304L
95 Edition, 96 Addenda
By O. Wojcicki Date 9-8-97

THIS [illegible] CERTIFIES THAT THE ABOVE RESULTS ARE CONTAINED IN THE COMPANY RECO[illegible]

Avesta Sheffield

Avesta Sheffield Plate Inc. PSI MIC NO. **B712**

Certificate of Analysis and Tests

OUR ORDER 86005 - 10 HEAT & PIECE 48825-3A 11/30/96

SOLD TO: PROCESS SYSTEMS INTERNATIONAL
20 WALKUP DRIVE
WESTBOROUGH MA 01581

SHIP TO: RANOR, INC.
BELLA DRIVE
ATTN: TOM ZIOBROWSKI
WESTMINSTER MA 01473
737001-03

---------- YOUR ORDER & DATE ----------

555477 8/02/96 TAG# V049P7802

---------- ITEM DESCRIPTION ----------

HEAT & PIECE 48825 - 3A ~~3A~~ 3B
WEIGHT 1549
FINISH 1
GRADE 304L / 304 UNS-S30403 / UNS-S30400
DIMENSIONS .250 X 60.125 X 332.313 EXACT

---------- SPECIFICATIONS ----------

V049-2-041 REV0 WITH EXCEPTS
ASTM A480-94B, ASME SA480-95
COUPONS REQUIRED
ASTM A262-93 PRAC A

ASTM A240-95B, ASME SA240-95
NO WELD REPAIR ON MATERIAL
ASTM A262-93 PRAC E

PLATES & TEST PCS SOLUTION ANNEALED @ 1950 DEGREES FARENHEIT MINIMUM.
THEN WATER COOLED OR RAPIDLY COOLED BY AIR
FREE OF MERCURY CONTAMINATION
HOT ROLLED, ANNEALED & PICKLED (HRAP)

---------- MECHANICAL & OTHER TESTS ----------

HARDNESS RB	82
YIELD STRENGTH (PSI)	38783 ✓
TENSILE STRENGTH (PSI)	84239 ✓
BEND	OK
INTERGRANULAR CORROSION	OK
ELONGATION % IN 2"	55.6 ✓
REDUCTION OF AREA %	72.2

---------- CHEMICAL COMPOSITION ----------

CARBON	(C)	.017 ✓
MANGANESE	(MN)	1.49 ✓
PHOSPHORUS	(P)	.031 ✓
SULFUR	(S)	.001 ✓
SILICON	(SI)	.31 ✓
CHROMIUM	(CR)	18.33 ✓
NICKEL	(NI)	8.61
COBALT	(CO)	.13
COPPER	(CU)	.45
MOLY	(MO)	.49
NITROGEN	(N)	.06

PROCESS SYSTEMS INT'L., INC.
Reviewed this report and it complies
with ~~SA/SB~~ 240 Gr 304/304L
96 Edition, 96 Addenda
By C. Wojcicki Date 9-16-97

KNOWINGLY & WILLFULLY FALSIFYING OR CONCEALING A MATERIAL FACT ON THIS FORM, OR MAKING FALSE, FICTITIOUS OR FRAUDULENT STATEMENTS OR REPRESENTATIONS HEREIN COULD CONSTITUTE A FELONY PUNISHABLE UNDER FEDERAL STATUTES.

K. JOHNSON, LAB TESTING MANAGER

Avesta Sheffield Plate Inc.
P.O. Box 370
New Castle, Indiana 47362

Avesta Sheffield

Avesta Sheffield Plate Inc.

PSI MIC NO. B699

Certificate of Analysis and Tests

OUR ORDER 86005 - 09 HEAT & PIECE 48852-1A 11/22/96

SOLD TO: PROCESS SYSTEMS INTERNATIONAL
20 WALKUP DRIVE
WESTBOROUGH MA 01581

SHIP TO: RANOR, INC.
BELLA DRIVE
ATTN: TOM ZIOBROWSKI
WESTMINSTER MA 01473
737001-03

---------- YOUR ORDER & DATE ----------

555477 8/02/96 TAG# V049P7801

---------- ITEM DESCRIPTION ----------

HEAT & PIECE 48852 - 1A
WEIGHT 4605
FINISH 1
GRADE 304L / 304 UNS-S30403 / UNS-S30400
DIMENSIONS .500 X 91.813 X 333.438 EXACT

---------- SPECIFICATIONS ----------

V049-2-041 REV0 WITH EXCEPTS
ASTM A480-94B, ASME SA480-95
COUPONS REQUIRED
ASTM A262-93 PRAC A

ASTM A240-95B, ASME SA240-95
NO WELD REPAIR ON MATERIAL
ASTM A262-93 PRAC E

PLATES & TEST PCS SOLUTION ANNEALED @ 1950 DEGREES FARENHEIT MINIMUM.
THEN WATER COOLED OR RAPIDLY COOLED BY AIR
FREE OF MERCURY CONTAMINATION
HOT ROLLED, ANNEALED & PICKLED (HRAP)

---------- MECHANICAL & OTHER TESTS ----------

HARDNESS RB	84
YIELD STRENGTH (PSI)	42153
TENSILE STRENGTH (PSI)	85488
BEND	OK
INTERGRANULAR CORROSION	OK
ELONGATION % IN 2"	61.5
REDUCTION OF AREA %	71.1

---------- CHEMICAL COMPOSITION ----------

CARBON	(C)	.016
MANGANESE	(MN)	1.52
PHOSPHORUS	(P)	.030
SULFUR	(S)	.001
SILICON	(SI)	.35
CHROMIUM	(CR)	18.43
NICKEL	(NI)	8.70
COBALT	(CO)	.13
COPPER	(CU)	.47
MOLY	(MO)	.45
NITROGEN	(N)	.07

PROCESS SYSTEMS INT'L., INC.
Reviewed this report and it complies with SA/GB- 240 Gr. 304/304L
95 Edition, 96 Addenda
By O. Wotecki Date 9-16-97

KNOWINGLY & WILLFULLY FALSIFYING OR CONCEALING A MATERIAL FACT ON THIS FORM, OR MAKING FALSE, FICTITIOUS OR FRAUDULENT STATEMENTS OR REPRESENTATIONS HEREIN COULD CONSTITUTE A FELONY PUNISHABLE UNDER FEDERAL STATUTES.

A. L. TRISSLER, LAB TESTING MANAGER

Avesta Sheffield Plate Inc.
P.O. Box 370
New Castle Indiana 47362

Burnham, PA 17009
Tel: 717-248-4911

STANDARD STEEL
QP090-F1
A Division of FREEDOM FORGE Corporation

METALLURGICAL CERTIFICATION

FOR: PROCESS SYS INT MA
CUSTOMER ORDER NUMBER 555492
REPORT DATE: 01/30/97

PCS SHIPPED: 8
02 OUR ORDER NO 532691602
SHIPLIST NO: 62247

PRODUCT

RING VD49M004-1
MACHINE 250/500 MICRO TO SIZES SHOWN: 112.5" OD +.06 X 104.25" ID -.06 X 1.25" WD +.06
SPECIFICATION: ASME SA182 GRADE F304L IN ACCORDANCE WITH PROCESS SYSTEMS SPEC.
AV049-2-040 REV 6

PSI MIC NO. **B366**

CUSTOMER

PROCESS SYSTEMS INTERNATIONAL, INC.
20 WALKUP DRIVE
WESTBOROUGH MA 01581
ATTENTION:

CHEMICAL ANALYSIS

HEAT NO.	C	SI	P	MN	S	NI	CR	MO	V	AL	TI				
509438	✓ .019	✓ .18	✓ .031	✓ 1.76	✓ .004	✓ 11.54	✓ 19.08			N .0900					

MECHANICAL PROPERTIES

HEAT NUMBER	SERIAL NUMBER	BRINELL	TEN TEMP (F)	TEN BHN	TENSILE LOCATION	UTS (KSI)	YIELD ST (KSI) .20%OFST	% ELONG	%REO AREA	IMPACT DATA LOCATION	IMPACT DATA TEMP (F)	IMPACT DATA FT. LBS	IMPACT DATA % SHR	IMPACT DATA LAT EXP	GRN SZE
509438	6L14306		+75		PROLONG	75.2 ✓	35.4 ✓	64.0 ✓	78.0						
509438	6L14308														
509438	6L14309														
509438	6L14311														
509438	6L14314														
509438	6L14316														
509438	6L14317														
509438	6L14319														

IT-34 B366

TYPE OF HEAT TREATMENT: SOLUTION TREATED AND QUENCHED

PROCESS SYSTEMS INT'L., INC.
Reviewed this report and it complies with SA/SB- 182 Gr. 2-5-97
95 Edition, ___ Addenda
By C. Wotaicki Date 2-5-97

THIS REPORT CERTIFIES THAT THE ABOVE RESULTS ARE CORRECT AS REPORTED AND CONTAINED IN THE COMPANY RECORDS

D.W. Kolb

WASHINGTON STEEL
A LUKENS COMPANY

TEST CERTIFICATE 2.62123

CUSTOMER P.O.: 731599950306
DESCRIPTION: 1 - RECTANGLE .25 -X- 96 -X- 320

PAGE NO. 01 - 2
FILE NO: 8697 03-16
DATE: 05/03/96
MILL ORDER NO: 16592-001

SOLD TO:
WILLIAMS & CO. INCORPORATED
901 PENNSYLVANIA AVENUE
IT-3
PITTSBURGH PA 15233

SEND TO: 01
TEST REPORT WITH SHIPMENT

SHIP TO:
WILLIAMS & CO. INC.
7640 REINHOLD DRIVE
CINCINNATI OH 45237

PSI MIC NO. A791

MATERIAL HAS BEEN MANUFACTURED AND TESTED IN ACCORDANCE WITH PURCHASE ORDER REQUIREMENTS AND SPECIFICATIONS:

LLI A240 YR 93 TYPE-304L
TM A240-94A TYPE 304/304L, ASME SA240
ACTICE A & E, ASTM A480-94B, ASTM A276-94B

ASTM A240 TYPE-304L
95 EDITION TYPE 304/304L, ASTM A262-93A
(CHEM & MECH PROPERTIES ONLY) TYPE 304/304L

CHEMICAL ANALYSIS

MELT/SLAB	C	MN	P	S	CU	SI	NI	CR	MO	V	TI	B	N
▶981 /6CA	✓	✓	✓	✓		✓	✓	✓					✓
Y0981	.027	1.79	.025	.008	.17	.52	8.94	18.21	.21				.0840
EOD ANALYSIS	.029	1.81	.024	.007	.17	.59	8.90	18.17	.22				.0830

PRACTICES

WMS. & CO. Q.A. APPROVED MAY 13 '96

TENSILES

	YLD (PSI X 100)	TENS X 100)	% ELONG 2"	% R.A.
	488 ✓	854 ✓	73.0 ✓	55.0 ✓

CHARPY V IMPACTS

TYPE	TEMP	MILS LATERAL EXPANSION	% SHEAR

OTHER TESTS PERFORMED

BEND TEST - LOC/DIR BX - PASS
BRINELL - 146 TEST LOC-B
CORROSION A262E SATISFACTORY

PROCESS SYSTEMS INT'L., INC.
Reviewed this report and it complies with SA/SB 240 Gr. 304L
96 Edition, — Addenda
By C. Wotecki Date 10-3-96

INFORMATION

EIGHT PER PIECE = 2381 LBS. 1082 KG.
WELD REPAIR WAS PERFORMED BY LUKENS.
ERCURY OR MERCURY COMPOUNDS ARE NOT USED IN THE
NUFACTURE OF LUKENS'/WASHINGTON'S PRODUCTS.
CORROSION TEST PER ASTM A262 PRACTICE A & E. **
SIZE = .2500"NOM X 96.0000"NOM X 320.0625"ACT X WGT. = 2207

HEAT TREAT CYCLES - MATL. OR TESTS - DEG FAHR.

MATL	TEST	NOM TEMP	MIN TEMP	MAX TEMP	HOLD MINS.	COOL METHOD	END TEMP
X	X	1950			0010	WQ	

HEAT TREAT CYCLES - TESTS ONLY - DEG FAHR.

START END TEMP	NOM TEMP	MIN TEMP	MAX TEMP	HOLD MINS.	HEAT RATE MAX	COOL RATE MAX

HEREBY CERTIFY THE ABOVE INFORMATION IS CORRECT:

Quality Assurance Laboratory
Coatesville, PA 19320

ELINORE ZAPLITNY
SUPERVISOR - TEST REPORTING

FORM NO. 2221TW (10/93)

tel: 717-248-4911

STANDARD STEEL

QP070-F1

A Division of FREEDOM FORGE Corporation

FOR: PROCESS SYS. INT'L
CUSTOMER ORDER NUMBER 555492
REPORT DATE: 07/24/96

PCS SHIPPED: 12
09 OUR ORDER NO 432620505
SHIPLIST NO: 55097

PRODUCT

RING V049M242-1
MACHINE 250/500 MICRO TO SIZES SHOWN: 56.25" OD +.06 X 48.0" ID -.06 X 1.5" WD +.06
SPECIFICATION: ASME SA182 GRADE F304L IN ACCORDANCE WITH PROCESS SYSTEMS SPEC.
AV049-2-040 REV 6

PSI MIC NO. **A600**

CUSTOMER

PROCESS SYSTEMS INTERNATIONAL, INC.
20 WALKUP DRIVE
WESTBOROUGH MA 01581
ATTENTION:

PROCESS SYSTEMS INT'L., INC.
Reviewed this report and it complies with SA/SB 182 Gr. 304L
95 Edition, ✓ Addenda
By C. Wotecki Date 9-12-96

CHEMICAL ANALYSIS

HEAT NO.	C	SI	P	MN	S	NI	CR	MO	V	AL	TI				
509240	.018	.54	.028	1.80	.004	11.41	19.01			N .0630					

MECHANICAL PROPERTIES

HEAT NUMBER	SERIAL NUMBER	BRINELL	TEN TEMP (F)	TEN BHN	TENSILE LOCATION	UTS (KSI)	YIELD ST (KSI) .20%OFST	% ELONG	%RED AREA	IMPACT DATA LOCATION	IMPACT DATA TEMP (F)	IMPACT DATA FT. LBS	IMPACT DATA % SHR	IMPACT DATA LAT EXP	GRN SZE
509240	6G1251A		+75		PROLONG	76.5	41.5	59.0	73.0						
509240	6G1251B														
509240	6G1251C														
509240	6G1251D														
509240	6G1252A														
509240	6G1252B														
509240	6G1252C														
509240	6G1252D														
509240	6G1253A														
509240	6G1253B														
509240	6G1253C														
509240	6G1253D														

WASHINGTON STEEL
A LUKENS COMPANY

TEST CERTIFICATE

CUSTOMER P.O.: F24101
DESCRIPTION: 2 - RECTANGLE .375 -X- 117.5 -X- 117.5

FILE NO: 360-01-03
DATE: 08/08/96
MILL ORDER NO: 22187-001

SOLD TO:
TRINITY INDUSTRIES, INC.
P.O. BOX 41192
B695
CINCINNATI OH 45241

SEND TO: 01-C

SHIP TO:
TRINITY INDUSTRIES-CUST PICKUP
P.O. BOX 41192
PSI MIC NO. B695
CINCINNATI OH 45241

THIS MATERIAL HAS BEEN MANUFACTURED AND TESTED IN ACCORDANCE WITH PURCHASE ORDER REQUIREMENTS AND SPECIFICATIONS:

ASTM A240 YR 94A TYPE-304L
ASTM A167-93-304L, QQS-766D COND. A-304L,
ASTM A240-304L, ASME SA240-304L,
AMS 5511, MIL-S-5059

MELT/SLAB	CHEMICAL ANALYSIS													PRACTICES
Y1163 /SAB	C	MN	P	S	CU	SI	NI	CR	MO	V	TI	B	N	
Y1163	.021	1.80	.027	.007	.34	.54	8.51	18.19	.35				.0810	
PROD ANALYSIS	.020	1.81	.026	.007	.34	.56	8.46	18.06	.36				.0860	

TENSILES					CHARPY V IMPACTS				OTHER TESTS PERFORMED
TYPE	YLD (PSI X 1001)	TENS	% ELONG 2"	% R.A.	TYPE	TEMP	MILS LATERAL EXPANSION	% SHEAR	BEND TEST - LOC/DIR BX - PASS
X	505	864	70.0	54.0					BRINELL - 156 TEST LO
									CORROSION A262E SATISFACTORY

PROCESS SYSTEMS INT'L., INC.
Reviewed this report and it complies with SA/SB- 240 Gr. 304L
95 Edition, 96 Addend
By C. Wojcicki Date 9-16-97

INFORMATION

WEIGHT PER PIECE = 1582 LBS. 719 KG.
MERCURY OR MERCURY COMPOUNDS ARE NOT USED IN THE MANUFACTURE OF LUKENS'/WASHINGTON'S PRODUCTS.
** CORROSION TEST PER ASTM A262 PRACTICE A & E. **
PART NO. 2-12118
B/L #38239 CUSTOMER'S TRUCK
** SIZE = .3750"NOM X 117.5000"NOM X 117.6250"ACT X WGT. = 1490

HEAT TREAT CYCLES MATL OR TESTS DEG F

MATL	TEST	NOM TEMP	MIN TEMP	MAX TEMP	HOLD MINS.	COOL METHOD
X	X	1950			0012	WQ

REHEAT CYCLES TESTED ONLY DEG F

START END TEMP	NOM TEMP	MIN TEMP	MAX TEMP	HOLD MINS.	HEAT RATE MAX

WE HEREBY CERTIFY THE ABOVE INFORMATION IS CORRECT:

Quality Assurance Laboratory
Coatesville, PA 19320

SUPERVISOR - TEST REPORTING

FORM NO 2271TW (10/93)

Weld Wire Costs

SANDVIK Steel

We make Quality happen . . .

MATERIAL CERTIFICATE

SANDVIK STEEL COMPANY
P.O. BOX 1220, SCRANTON, PA. 18501 PH. (717) 587-5191
PLANT LOCATION: INTERSTATE 81, WAVERLY EXIT 59

T0065-R/774/0500

LD TO: BOC GASES (AIRCO)
LISLE IL

SHIP TO: PROCESS SYSTEMS

ISTOMER PURCHASE ORDER NO.:

CERTIFICATE DATE: 10/04/96

NDVIK ORDER NO.: 92899

QUANTITY: 160 LBS

ORK ORDER/LOT NO.:

TAG:

AWS A-5.9

STAINLESS STEEL WELDING WIRE TYPE ER 308L

DIAMETER: 1/8"

Filler Metal Analysis, %

Heat S713906	C	Si	Mn	P	S	Cr	Ni
PSI OC CW	.013	.430	1.720	.020	.013	19.88	9.98
	Mo	Cb/Nb	Ta	Ti	Cu	Cb/Nb+Ta	N
	.250	.010		.005	.150		.055

The material has not come in contact with mercury or mercury-containing compounds.

"Material not touched by hand after final production process cleaning."

Material has been manufactured in accordance with Sandvik Steel Company Quality Manual Revision 10 dated October 1, 1995. Quality system approved to ISO-9002/ANSI/ASQC Q9002-1994.

Bengt H. Berg, Director, Quality and Metallurgy
Daniel Damiani, Quality Engineer

(66119)(10)

5

NDVIK Steel

Make Quality happen

MATERIAL CERTIFICATE

SANDVIK STEEL COMPANY

P.O. BOX 1220, SCRANTON, PA. 18501 PH. (717) 587-5191
PLANT LOCATION: INTERSTATE 81, WAVERLY EXIT 59

70065-R/7741A500

D TO: BOC GASES (AIRCO)
LISLE IL

SHIP TO: PROCESS SYSTEMS

TOMER PURCHASE ORDER NO.:

CERTIFICATE DATE: [illegible]

DVIK ORDER NO.: 16249

QUANTITY: 180LB.

K ORDER / LOT NO.:

TAG:

AWS A-5.9

STAINLESS STEEL WELDING WIRE TYPE ER 308L

DIAMETER: 3/32"

Filler Metal Analysis, %

Heat 5440928	C	Si	Mn	P	S	Cr	Ni
	.021	.470	1.800	.014	.013	20.00	9.68
	Mo	Cb/Nb	Ta	Ti	Cu	Cb/Nb+Ta	N
	.020			.002	.040	.030	.053

PSI QC CW

The material has not come in contact with mercury or mercury-containing compounds.

Material not touched by hand after final production process cleaning."

Material has been manufactured in accordance with Sandvik Steel Company Quality Manual Revision 10 dated October 1, 1995. Quality system approved to ISO-9002/ANSI/ASQC Q9002-1994.

BOC GASES
90 RESEARCH ROAD
HINGHAM, MA 02043

Keith M. Hottle, Manager, Quality & Metallurgy
Celeste Brennan, Sr. Quality Engineer

Celeste Brennan/cp

(66119)(10)

CUSTOMER ORIGINAL

SANDVIK

MATERIAL CERTIFICA

SANDVIK STEEL COMPANY
P.O. BOX [illegible] SCRANTON, PA. 18501 P (717) 587-5191
PLANT LOCATION: INTERSTATE 81, WESTERLY EXIT 59

SOLD TO: BOC GASES (AIRCO)
LISLE IL

SHIP TO: AIRCO-NEW ENGLAND
HINGHAM MA

CUSTOMER PURCHASE ORDER NO.: 47910

CERTIFICATE DATE: 7/14/97

SANDVIK ORDER NO.: 16249

QUANTITY: PER PACKING NOTE

WORK ORDER / LOT NO.: 980309

TAG

AWS A 5.9

STAINLESS STEEL WELDING WIRE TYPE ER 308L

DIAMETER: 1/16"

Filler Metal Analysis, %

Heat	C	Si	Mn	P	S	Cr	Ni
S713039	.013	.380	1.800	.015	.013	20.06	9.84

PSI QC CW

Mo	Cb/Nb	Ta	Ti	Cu	Cb/Nb+Ta	N
.100			.002	.070	.030	.044

The material has not come in contact with mercury or mercury-containing compounds.

"Material not touched by hand after final production process cleaning."

Material has been manufactured in accordance with Sandvik Steel Company Quality Manual Revision 10 dated October 1, 1995. Quality system approved to ISO-9002/ANSI/ASQC Q9002-1994.

PROCESS SYS
120 LBS
70040-R / 7741D500

Keith M. Hottle, Manager, Quality & Metallurgy
Celeste Brennan, Sr. Quality Engineer

Celeste Brennan

15(66119)(10)

CUSTOMER ORIGINAL

BOC GASES
90 RESEARCH ROAD
HINGHAM, MA 02043

56 lbs

XJK8115-02

KOBELCO

PURCHASER
PO 70040-R/7744101500
PROCESS SYSTEMS

INSPECTION CERTIFICATE

FLUX CORED WIRE

CERTIFICATE NO.: A 017

DATE OF ISSUE : 1997.01.28

TRADE DESIGNATION	DIMENSION (mm)	MFG.NO.	APPLICABLE SPECIFICATION AND CLASSIFICATION
DW-308L	0.9	B6M1085	AWS A5.22 E308LT0-1 ASME SFA-5.22 E308LT-1

CHEMICAL COMPOSITION (%)

ELEMENTS	C	SI	MN	P	S	CU	NI	CR	MO	NB	N	FN	FS	FNV
DEPOSITED METAL	0.034	0.39	1.22	0.026	0.006	0.05	9.73	18.91	0.11	0.01	0.041	UNIT:FN 6.0	6.8	UNIT:FN 6.0
ELEMENTS														

TENSILE TEST OF DEPOSITED METAL

YIELD POINT	YIELD STRENGTH AT 0.2% OFFSET	TENSILE STRENGTH	ELONGATION
– N /mm²	– N /mm²	584 N /mm²	52 %
– kgf/mm²	– kgf/mm²	59.6 kgf/mm²	

IMPACT TEST OF DEPOSITED METAL

TEST TEMP.	ABSORBED ENERGY AVG.	
– ℃	– J	
	– kgf.m	

HARDNESS TEST

VICKERS HARDNESS (AVG.)
–

WELDING CONDITIONS

TYPE OF CURRENT	DCEP	SHIELDING GAS	CO2
AMPERAGE	110 A		
ARC VOLTAGE	25 V		

POSTWELD HEAT TREATMENT

– ℃ x – h

FS = FERRITE(SCHAEFFLER DIAGR.
FN = FERRITE(DELONG DIAGRAM)
FNV= FERRITE(WRC)

WE HEREBY CERTIFY THAT THE TEST RESULTS OF THE ABOVE WELDING MATERIAL ARE AS DESCRIBED HEREIN AND SATISFY THE REQUIREMENTS OF THE APPLICABLE SPECIFICATION.

KOBE STEEL, LTD.
WELDING DIV. FUJISAWA PLANT

CHIEF INSPECTOR

04/09/1997 15:57 7139746424 KOBELCO PAGE 14

BOC GASES

KOBELCO

90 RESEARCH ROAD
HINGHAM, MA 02043
PO# 70040-R / 7741015OO
PROCESS SYSTEMS

INSPECTION CERTIFICATE

FLUX CORED WIRE

CERTIFICATE NO.: A 002

DATE OF ISSUE : 1997.01.07

TRADE DESIGNATION	DIMENSION (mm)	MFG. NO.	PSI QC CW	APPLICABLE SPECIFICATION AND CLASSIFICATION
DW-309L	0.9	B6M1015		AWS A5.22 E309LT0-1 ASME SFA-5.22 E309LT-1

CHEMICAL COMPOSITION (%)

ELEMENTS	C	SI	MN	P	S	CU	NI	CR	MO	NB	N	FN UNIT:FN	FS	PHW UNIT:FN
DEPOSITED METAL	0.026	0.43	1.10	0.022	0.012	0.04	12.75	22.56	0.04	0.02	0.017	15.0	8.7	12.0
ELEMENTS														

TENSILE TEST OF DEPOSITED METAL

YIELD POINT	YIELD STRENGTH AT 0.2% OFFSET	TENSILE STRENGTH	ELONGATION
— N /mm²	— N /mm²	540 N /mm²	40 %
— kgf/mm²	— kgf/mm²	55.1 kgf/mm²	

IMPACT TEST OF DEPOSITED METAL

TEST TEMP.	ABSORBED ENERGY	AVG.
— ℃	— J	
	— kgf.m	

HARDNESS TEST

VICKERS HARDNESS (AVG.)

—

WELDING CONDITIONS

TYPE OF CURRENT	DCEP		SHIELDING GAS	CO2
AMPERAGE	110	A		
ARC VOLTAGE	25	V		

POSTWELD HEAT TREATMENT

— ℃ x —

FS = FERRITE (SCHAEFFLER DIAGRAM)
FN = FERRITE (DELONG DIAGRAM)
FNW= FERRITE (WRC)

WE HEREBY CERTIFY THAT THE TEST RESULTS OF THE ABOVE WELDING MATERIAL ARE AS DESCRIBED HEREIN AND SATISFY THE REQUIREMENTS OF THE APPLICABLE SPECIFICATION.

KOBE STEEL, LTD.
WELDING DIV. FUJISAWA PLANT

CHIEF INSPECTOR

04/09/1997 15:57 7139746424 KOBELCO PAGE 11
P08/19
1997-01-14(火) 19:12 発信 KWAI
(株)溶材部 7139746424

SANDVIK Steel

We make Quality happen

MATERIAL CERTIFICAT

SANDVIK STEEL COMPANY
P.O. BOX 1220, SCRANTON, PA. 18501 PH. (717) 587-5191
PLANT LOCATION: INTERSTATE 81, WAVERLY EXIT 59

SOLD TO: BOC GASES (AIRCO)
LISLE IL

SHIP TO:

CUSTOMER PURCHASE ORDER NO.:

CERTIFICATE DATE: 4/21/97

SANDVIK ORDER NO.: 12603

QUANTITY: PER PACKING NOTE

WORK ORDER / LOT NO.:

TAG:

AWS A-5.9

STAINLESS STEEL WELDING WIRE TYPE ER 308L

DIAMETER: 3/32"

Filler Metal Analysis, %

Heat S71297G	C	Si	Mn	P	S	Cr	Ni
	.013	.440	1.800	.015	.015	19.96	9.63

PSI QC CW

Mo	Cb/Nb	Ta	Ti	Cu	Cb/Nb+Ta	N
.070			.002	.060	.030	.035

The material has not come in contact with mercury or mercury-containing compounds.

"Material not touched by hand after final production process cleaning."

Material has been manufactured in accordance with Sandvik Steel Company Quality Manual Revision 10 dated October 1, 1995. Quality system approved to ISO-9002/ANSI/ASQC Q9002-1994.

Keith M. Hottle, Manager, Quality & Metallurgy
Celeste Brennan, Sr. Quality Engineer

Celeste Brennan/cp

15(66119)(10)

BOC GASES
90 RESEARCH ROAD
HINGHAM, MA 02043

PROCESS SYSTEMS
120 LBS 308L 3/32
70040-R/774101500

(6)

CUSTOMER ORIGINAL

SANDVIK Steel

We make Quality happen . . .

MATERIAL CERTIFICA

SANDVIK STEEL COMPANY
P.O. BOX 1220, SCRANTON, PA. 18501 PH. (717) 587-5191
PLANT LOCATION: INTERSTATE 81, WAVERLY EXIT 59

SOLD TO: BOC GASES (AIRCO)
LISLE IL

SHIP TO: AIRCO-NEW ENGLAND
HINGHAM MA

CUSTOMER PURCHASE ORDER NO.:

CERTIFICATE DATE: 10/04/96

SANDVIK ORDER NO.: 92899

QUANTITY: PER PACKING NOTE

WORK ORDER / LOT NO.:

TAG:

AWS A-5.9

STAINLESS STEEL WELDING WIRE TYPE ER 308L

DIAMETER: 1/8"

Filler Metal Analysis, %

Heat S 711088	C	Si	Mn	P	S	Cr	Ni
PSI QC CW	.013	.430	1.720	.020	.013	19.88	9.98
	Mo	Cb/Nb	Ta	Ti	Cu	Cb/Nb+Ta	N
	.250	.010		.005	.150		.055

The material has not come in contact with mercury or mercury-containing compounds.

"Material not touched by hand after final production process cleaning."

Material has been manufactured in accordance with Sandvik Steel Company Quality Manual Revision 10 dated October 1, 1995. Quality system approved to ISO-9002/ANSI/ASQC Q9002-1994.

PROCESS SYSTEMS
120 LBS 308L 1/18
70040-R/774101500

Bengt H. Berg, Director, Quality and Metallurgy
Daniel Damiani, Quality Engineer

15(66119)(10)

5

CUSTOMER ORIGINAL

(7)

MATERIAL CERTIFICATE

SANDVIK Steel
make Quality happen

SANDVIK STEEL COMPANY
P.O. BOX 1220, SCRANTON, PA. 18501 PH. (717) 587-5191
PLANT LOCATION: INTERSTATE 81, WAVERLY EXIT 59

SOLD TO: BOC GASES (AIRCO)
LISLE IL

SHIP TO: PROCESS SYSTEMS INTL
7-8-97

CUSTOMER PURCHASE ORDER NO.: 70038-R/774101500

CERTIFICATE DATE: 4/21/97

SANDVIK ORDER NO.: 12603

QUANTITY: PER PACKING NOTE

WORK ORDER / LOT NO.:

TAG:

AWS A-5.9

.035

STAINLESS STEEL WELDING WIRE TYPE ER 308L

DIAMETER: 3/32 120 LB

Filler Metal Analysis, %

Heat	C	Si	Mn	P	S	Cr	Ni
3713617	.013	.440	1.800	.015	.015	19.96	9.63

PSI QC CW

Mo	Cb/Nb	Ta	Ti	Cu	Cb/Nb+Ta	N
.070			.002	.060	.030	.035

The material has not come in contact with mercury or mercury-containing compounds.

"Material not touched by hand after final production process cleaning."

Material has been manufactured in accordance with Sandvik Steel Company Quality Manual Revision 10 dated October 1, 1995. Quality system approved to ISO-9002/ANSI/ASQC Q9002-1994.

BOC GASES
90 RESEARCH ROAD
HINGHAM, MA 02043

Keith M. Hottle, Manager, Quality & Metallurgy
Celeste Brennan, Sr. Quality Engineer

Celeste Brennan /cp

15(66119)(10)

(8)

HARRIS-WELCO | 1051 YORK ROAD P.O. BOX 69 | KINGS MOUNTAIN, NC 28086

SOLDERING, BRAZING & WELDING PRODUCTS

CERTIFICATE OF COMPLIANCE

JGP ISSUE DATE: 08-30-96

PROCESS SYSTEMS INTL
P.O. 70038R/7741000

DATE SENT 6-27-97

HEAT NUMBER/LOT NUMBER: 6120287803—60LB
E50836-K1—20LB

CHEMICAL COMPOSITION LIMITS

ALLOY: 308L
SPEC : AWS A5.9-93 ER308L

CARBON			.030	SILICON	.300	-	.650
MANGANESE	1.000	-	2.500	PHOSPHORUS			.030
SULFUR			.030	CHROMIUM	19.500	-	22.000
NICKEL	9.000	-	11.000	MOLYBDENUM			.750
TANTALUM			.500	CB + TA			.500
TITANIUM			.600	COPPER			.750
NITROGEN			.600	COBALT			.500
MAGNESIUM			.500	OTHER			.5
NIOBIUM			.500				

PSI QC CW 1-7-97

PSI QC CW 1-7-97

SINGLE VALUES ARE MAXIMUM UNLESS OTHERWISE SPECIFIED.

SAFETY SILV, STAY SILV, STAY CLEAN, STAY BRITE & BRIDGIT ARE REGISTERED TRADEMARKS OF J.W. HARRIS CO., INC

WE CERTIFY THAT THE ITEMS AND/OR MATERIALS LISTED ABOVE ARE IN ACCORDANCE WITH ALL APPLICABLE PURCHASE SPECIFICATIONS HAVING PASSED OUR INSPECTIONS AS NOTED.

Janice Pittman
CERTIFICATION CLERK

BOC GASES
90 RESEARCH ROAD
HINGHAM, MA 02043

(9)

SEP-25-96 WED 7:59 AM FAX NO. 2067742

THE ESAB GROUP, INC.
1500 Karen Lane, Hanover, PA 17331

CERTIFICATE OF TYPICAL ANALYSIS

11/19/96 PROCESS SYSTEMS INTL

BOC GASES
90 RESEARCH ROAD
HINGHAM, MA 02043

7-14-97 Order No.: 700381/7741000

This Material Conforms to Specification:
AWS A5.20-95, ASME SFA 5.20

Trade Name
or Trademark: Dual Shield II 70 Ultra

Diameter Size: .035" x 33# Spool

Type: E71T-1* / E71T-12M

Weight: 132 LB

X-Rays Satisfactory

Lot Number: 49455 — 66 LB ✓
49720 — 33 LB ✓
50293 — 33 LB ✓

PSI
QC
CW

Typical Chemical Properties		(Specification Requirements)
Carbon:	.02	(.15 Max.)
Manganese:	1.10	(1.60 Max.)
Chromium:	.04	(.20 Max.)
Nickel:	.01	(.50 Max.)
Silicon:	.34	(.90 Max.)
Columbium+: Tantalum:		
Molybdenum:	.01	(.30 Max.)
Tungsten:		
Copper:	.01	(.35 Max.)
Titanium:		
Phosphorus:	.013	(.03 Max.)
Sulphur:	.010	(.03 Max.)
Vanadium:	.02	(.08 Max.)

Hydrogen: 4.2 ml/100 gr. of weld metal

Fillets: Vertical-Up/Overhead

Shielding Gas: 75% AR/ 25% CO_2

Typical Mechanical Properties

	As Welded	MPa
Yield Strength (Psi)	70,000	483
Tensile Strength (Psi)	76,800	530
Elongation (2"), %	32.0	
Red. of Area, %	74.6	
Charpy V-Notch Impacts		
@ -20°F. (ft.-lbs.)	117	
@ -29°C. (Joules)	159	

(Specification Requirements)

Minimum Unless Otherwise Stated	As Welded	MPa
Yield Strength (Psi)	58,000	400
Tensile Strength (Psi)	70-90,000	480-620
Elongation (2"), %	22.0	22
Red. of Area, %	---	--
Charpy V-Notch Impacts		
@ -20°F. (ft.-lbs.)	20	
@ -29°C. (Joules)	27	

* No data being issued for E71T-1 classification using the CO_2 shielding gas.

The undersigned certifies that the product supplied will meet the requirements of the applicable AWS Filler Metal Specification when tested in accordance with that specification, and that no significant change has been made in the elements described in the qualification approval.

BOC GASES
90 RESEARCH ROAD
HINGHAM, MA 02043

By: D. A. Smith

D. A. Smith, Supervisor, Q. A. Services

SANDVIK

MATERIAL CERTIFICATE

SANDVIK STEEL COMPANY
P.O. BOX 1220, SCRANTON, PA. 18501 · PH. (717) 587-5191
PLANT LOCATION: INTERSTATE 81, WAVERLY EXIT 59

SOLD TO: PROCESS SYS SHIP TO:

CUSTOMER PURCHASE ORDER NO. 70029R/774101500 CERTIFICATE DATE: 4/25/97

SANDVIK ORDER NO. QUANTITY: 120 LBS

WORK ORDER / LOT NO.: 978457 TAG:

AWS A-5.9

STAINLESS STEEL WELDING WIRE TYPE ER 308L DIAMETER: 3/32"

Filler Metal Analysis, %

Heat	C	Si	Mn	P	S	Cr	Ni
S712976	.013	.440	1.800	.015	.015	19.96	9.63

	Mo	Cb/Nb	Ta	Ti	Cu	Cb/Nb+Ta	N
	.070			.002	.060	.030	.035

The material has not come in contact with mercury or mercury-containing compounds.

"Material not touched by hand after final production process cleaning."

Material has been manufactured in accordance with Sandvik Steel Company Quality Manual Revision 10 dated October 1, 1995. Quality system approved to ISO-9002/ANSI/ASQC Q9002-1994.

BOC GASES
90 RESEARCH ROAD
HINGHAM, MA 02043

Keith M. Hottle, Manager, Quality & Metallurgy
Celeste Brennan, Sr. Quality Engineer

Celeste Brennan lcp

15(66119)(10)

(11)

CUSTOMER ORIGINAL

SANDVIK Steel

We make Quality happen

MATERIAL CERTIFICAT

SANDVIK STEEL COMPANY

P.O. BOX 1220, SCRANTON, PA. 18501 PH. (717) 587-5191
PLANT LOCATION: INTERSTATE 81, WAVERLY EXIT 59

SOLD TO: PROCESS SYSTEMS

SHIP TO: [redacted]
AIRCO-NEW ENGLAND
HINGHAM MA

CUSTOMER PURCHASE ORDER NO.: 70029R/774101500

CERTIFICATE DATE: 3/20/97

SANDVIK ORDER NO.:

QUANTITY:

WORK ORDER / LOT NO.: 976164

TAG:

AWS A-5.9

STAINLESS STEEL WELDING WIRE TYPE ER 308L

DIAMETER: 1/16"

Filler Metal Analysis, %

Heat	C	Si	Mn	P	S	Cr	Ni
S711375	.007	.400	1.800	.014	.012	20.02	9.85

	Mo	Cb/Nb	Ta	Ti	Cu	Cb/Nb+Ta	N
	.010			.002	.030	.030	.055

The material has not come in contact with mercury or mercury-containing compounds.

"Material not touched by hand after final production process cleaning."

Material has been manufactured in accordance with Sandvik Steel Company Quality Manual Revision 10 dated October 1, 1995. Quality system approved to ISO-9002/ANSI/ASQC Q9002-1994.

Keith M. Bottle, Manager, Quality & Metallurgy
Celeste Brennan, Sr. Quality Engineer

IS(66119)(10)

BOC GASES
90 RESEARCH ROAD
HINGHAM, MA 02043

(12)

90 RESEARCH ROAD
HINGHAM, MA 02043

PO 70031R/774101500

X/11

KOBEL

PURCHASER
Process Systems Intl

INSPECTION CERTIFICATE
FLUX CORED WIRE

CERTIFICATE No.: D 021
DATE OF ISSUE : 1997.04.24

TRADE DESIGNATION	DIMENSION (mm)	MFG. NO	APPLICABLE SPECIFICATION AND CLASSIFICATION
DW-309L	1.2	B6F2110382 (PSI OC CW)	AWS A5.22-95 E309LT0-1 ASME SFA-5.22 E309LT- (1995 Edition)

CHEMICAL COMPOSITION (%)

ELEMENTS	C	SI	MN	P	S	CU	NI	CR	MO	NB	N	FN	FS	FNW
DEPOSITED METAL	0.024	0.44	1.25	0.018	0.013	0.02	12.78	23.76	0.02	<0.01	0.011	UNIT:FN 19.7	9.7	UNIT:FN 11.6

TENSILE TEST OF DEPOSITED METAL				IMPACT TEST OF DEPOSITED METAL			HARDNESS TEST
YIELD POINT	YIELD STRENGTH AT 0.2% OFFSET	TENSILE STRENGTH	ELONGATION	TEST TEMP.	ABSORBED ENERGY AVG.	—	—
— N/mm²	— N/mm²	555 N/mm²	37 %	— ℃	+ J	—	—
— MPa	— MPa	555 MPa			— kgf·m		

WELDING CONDITIONS				POSTWELD HEAT TREATMENT	
TYPE OF CURRENT	DCEP	SHIELDING GAS	CO2		FS = FERRITE(SCHAEFFLER DIAGRAM) FN = FERRITE(DELONG DIAGRAM) WRC = FERRITE(WRC)
AMPERAGE	200 A			— ℃ × — h	
ARC VOLTAGE	29 V				

WE HEREBY CERTIFY THAT THE TEST RESULTS OF THE ABOVE WELDING MATERIAL ARE AS DESCRIBED HEREIN AND SATISFY THE REQUIREMENTS OF THE APPLICABLE SPECIFICATION.

KOBE STEEL, LTD
WELDING DIV. FUJISAWA PLANT

CHIEF INSPECTOR

REMARKS: CAPITAL LETTERS ARE USED EXCEPT FOR UNIT.

SANDVIK Steel

We make Quality happen . . .

MATERIAL CERTIFICATE

SANDVIK STEEL COMPANY

P.O. BOX 1220, SCRANTON, PA. 18501 PH. (717) 587-5191
PLANT LOCATION: INTERSTATE 81, WAVERLY EXIT 59

SOLD TO: BOC GASES (AIRCO)
LISLE IL

SHIP TO: AIRCO-NEW ENGLAND
HINGHAM MA

USTOMER PURCHASE ORDER NO.: 48184

CERTIFICATE DATE: 6/10/97

ANDVIK ORDER NO.: 17126

QUANTITY: PER PACKING NOTE

/ORK ORDER / LOT NO.: 979336

TAG: 848523-01

AWS A-5.9

STAINLESS STEEL WELDING WIRE TYPE ER 308LSI DIAMETER: .035"

Filler Metal Analysis, %

Heat	C	Si	Mn	P	S	Cr	Ni
S712152 -60LB	.014	.840	1.700	.016	.013	19.50	10.23

Mo	Cb/Nb	Ta	Ti	Cu	Cb/Nb+Ta	N
.030			.002	.040	.020	.042

PSI QC CW

Process Systems Intl
P.O. 70031R/77410/500

The material has not come in contact with mercury or mercury-containing compounds.

BOC GASES
90 RESEARCH ROAD
HINGHAM, MA 02043

Keith M. Hottle, Manager, Quality & Metallurgy

1S(03030, REV.2)(10)

(1)

CUSTOMER ORIGINAL

90 RESEARCH ROAD
HINGHAM, MA 02043

P.O. 70031R/7741015OO 6-13-97 4/11 KOBE

PURCHASER
Process Systems Int'l

INSPECTION CERTIFICATE
FLUX CORED WIRE

CERTIFICATE No : D 021
DATE OF ISSUE : 1997.04.24

TRADE DESIGNATION	DIMENSION (mm)	MFG. NO	APPLICABLE SPECIFICATION AND CLASSIFICATI
DW-309L	.035 84LB	BLM1015 (PSI QC CW)	AWS A5.22-95 E309LTO-1 ASME SFA-5.22 E309LT- (1995 Edition)

CHEMICAL COMPOSITION (%)

ELEMENTS	C	SI	MN	P	S	CU	NI	CR	MO	NB	N	FN	FS	FNW
DEPOSITED METAL	0.024	0.44	1.25	0.018	0.013	0.02	12.78	23.76	0.02	<0.01	0.011	UNIT:FN 19.7	9.7	UNIT:FN 11.6

TENSILE TEST OF DEPOSITED METAL

YIELD POINT	YIELD STRENGTH AT 0.2% OFFSET	TENSILE STRENGTH	ELONGATION
— N/mm²	— N/mm²	555 N/mm²	37 %
— MPa	— MPa	555 MPa	

IMPACT TEST OF DEPOSITED METAL

TEST TEMP.	ABSORBED ENERGY		
	AVG.	—	
— ℃	— J	—	—
	— kgf·m		

HARDNESS TEST
—

WELDING CONDITIONS

TYPE OF CURRENT	DCEP	SHIELDING GAS	CO2
AMPERAGE	200 A		
VOLTAGE	29 V		

POSTWELD HEAT TREATMENT
— ℃ × — h

FS = FERRITE(SCHAEFFLER DIAGRAM)
FN = FERRITE(DELONG DIAGRAM)
WRC = FERRITE(WRC)

WE HEREBY CERTIFY THAT THE TEST RESULTS OF THE ABOVE WELDING MATERIAL ARE AS DESCRIBED HEREIN AND SATISFY THE REQUIREMENTS OF THE APPLICABLE SPECIFICATION.

◆KOBE STEEL, LTD
WELDING DIV. FUJISAWA PLANT

CHIEF INSPECTOR

REMARKS: CAPITAL LETTERS ARE USED EXCEPT FOR UNIT.

DELIVERY COPY

Airgas

NORTHEAST AIRGA

SERVING NEW ENGLAND

PICKING TICKET

Sold By: AIRGAS NORTHEAST
199 SOUTHWEST CUT OFF
WORCESTER, MA 01604
800-821-9852

Cust # : 72600

Order # : 306626-00

Ship To: PROCESS SYSTEMS INTERNT'L

Order Date: 04/22/97

20 WALKUP DR
WESTBURY MA 01581-0000

Page : 001 OF 00

NAME : PROCESS SYSTEMS
PO # : 70024R JOB#774-1015
REL# :
PHONE#: 508-898-0285

TER: 142
SLS: 8
BRN: 16

SHIP VIA: CUST PICKUP -NONE-
SHIP COD: 03 UPS: 0
COL/PPD : PREPAID
ROUTE # :

INITIALS: KEN
ORD TYPE: CHRG-OP
TIME : 28-APR-97 12:0
CPI :

QTY SHIP	UNIT HM	DESCRIPTION & HAZARD CLASS	LINE NO	ITEM NUMBER	LOC	QTY ORDER	QTY BKORD	BIN LOC	WT	UNIT AMOUNT	EXT AM
		********** SHIP COMPLETE ONLY **********		**********							
120	LB	5183 3/32X36 ALUMINUM	1	ALC 518333236 MSDS: 000078	LAK	120	0		120.0		
120	LB	5183 1/8X36 ALUM.	2	ALC 51831836	LAK	120	0		120.0		

********** This order is complete **********

Total Weight: 240.0

PSI
QC
CN

This is to certify that the above named materials are properly classified, described, packaged, marked and labeled, and are in proper condition for transportation according to the applicable regulations of the Department of Transportation.

Authorized Signature _____

Received by [signature]

AlcoTec

A Partnership of Alcoa Weld Wire Company, Inc. and Aluminum Technology Corporation

AlcoTec Wire Company
2750 Aero Park Drive
Traverse City, MI 49686 USA
(616) 941-4111 Phone
(616) 941-9154 Fax
alcotec@traverse.com E-mail

11/08/96

CERTIFIED MATERIAL REPORT

Alloy	Diameter	Package	Lot Number
R5183	.125	TIG Rod Box	363072

P.O.# - 86207

PSI QC CW

Chemical Composition limits

Element	Minimum %	Maximum %
Si	---	0.40
Fe	---	0.40
Cu	---	0.10
Mn	0.50	1.0
Mg	4.3	5.2
Cr	0.05	0.25
Zn	---	0.25
Ti	---	0.15
Be	---	0.0008
Other Each	---	0.05
Other Total	---	0.15
Aluminum	Remainder	

AlcoTec Wire Company hereby certifies that the material covered by this report has been inspected in accordance with and been found to meet the applicable requirements of specification AWS A5.10-92 and any order requirements listed below.

All Packaging materials are in compliance with CONEG legislation.

Additional Order Requirements:

V.P. - Quality Control

AlcoTec

A Partnership of Alcoa Weld Wire Company, Inc.
and Aluminum Technology Corporation

AlcoTec Wire Company
2750 Aero Park Drive
Traverse City, MI 49686 USA
(616) 941-4111 Phone
(616) 941-9154 Fax
alcotec@traverse.com E-mail

3/32

04/23/97

CERTIFIED MATERIAL REPORT

Alloy	Diameter	Package	Lot Number
R5183	.094	TIG Rod Box	363348

P.O.# - 105019

PSI QC CW

Tony Took 1 box of 101 to T II sample abs 4/29/97

Chemical Composition limits

Element	Minimum %	Maximum %
Si	---	0.40
Fe	---	0.40
Cu	---	0.10
Mn	0.50	1.0
Mg	4.3	5.2
Cr	0.05	0.25
Zn	---	0.25
Ti	---	0.15
Be	---	0.0008
~~Other Each~~	~~---~~	~~0.05~~
Other Total	---	0.15
Aluminum	Remainder	

AlcoTec Wire Company hereby certifies that the material covered by this report has been inspected in accordance with and been found to meet the applicable requirements of specification AWS A5.10-92 and any order requirements listed below.

All Packaging materials are in compliance with CONEG legislation.

Additional Order Requirements:

V.P. - Quality Control

FROM :6177490165 TO : #063 P.02/02

HARRIS
SOLDERING, BRAZING & WELDING PRODUCTS

J. W. HARRIS CO., INC. | 10930 DEERFIELD ROAD | CINCINNATI, OHIO 45242

J. W. Harris Co
Certificate of Con

Date _____

Date Shipped _____

Order No. _____

Sold To:
AIRCO NEW ENGLAND
90 RESEARCH ROAD
HINGHAM, MA 02043

Shipped To: Process Systems
PO 70015R

P.O. No. PO#

Item	Weight	Size	Alloy	Heat No.
1.	100 LB	1/16 x 36	Alum	0294
2.				
3.				

PSI QC CW

Comments:

BOC GASES
90 RESEARCH ROAD
HINGHAM, MA 02043

Alloy	AWS A510-00 ASME SFA5.10		QQ-R-5660 Class	Si	Fe	Cu	Mn	Mg	Cr	Zn	Ti	Percent Other Elem Each
1100 Aluminum (B)	ER1100	R1100	1100	A	A	0.05-0.20	[illegible]					0.05
2319 Aluminum (C)	ER2319	R2319	2319	0.20	0.30	5.8-6.8	[illegible]	0.02		[illegible]	0.10-0.20	0.05
4043 Aluminum	ER4043	R4043	4043	4.5-5.0	0.8	0.30	0.05	0.05		0.10	0.20	0.05
710 Aluminum	ER4047	R4047	4047	11.0-13.0	0.8	0.30	0.15	0.10		[illegible]		0.05
5183 Aluminum	ER5183	R5183	5183	.40	0.40	0.10	0.50-1.0	4.3-5.2	0.05-0.25		[illegible]	0.05
5356 Aluminum	ER5356	R5356	5356	0.25	0.40	0.10		4.5-5.5	0.05-0.25			0.05
5554 Aluminum	ER5554	R5554	5554		0.40	0.10		[illegible]	0.05-0.25			[illegible]
5556	ER5556	R5556	5556		0.40	[illegible]			[illegible]			[illegible]
5654	ER5654	R5654	5654		D	[illegible]		[illegible]	[illegible]			[illegible]

NOTES:

1. [illegible] shown are maximum percent [illegible] a minimum is [illegible]
2. [illegible] shall not exceed 0.0008 per[illegible]
A. [illegible] plus iron shall not exceed 0.[illegible]
B. [illegible] content is the difference [illegible] 0.010 percent or more each, expressed [illegible] can be less than [illegible]
C. Vanadium content shall be 0.05-0.15 percent. Zirconium content shall be 0.10-0.25 percent.
D. Silicon plus iron shall not exceed 0.45 percent.

We certify that the items and/or materials lised above are in accordanc applicable purchase specifications having passed our [illegible]ctions as n

SANDVIK Steel

We make Quality happen . . .

MATERIAL CERTIFICATE

SANDVIK STEEL COMPANY

P.O. BOX 1220, SCRANTON, PA. 18501 PH. (717) 587-5191

PLANT LOCATION: INTERSTATE 81, WAVERLY EXIT 59

SOLD TO: BOC GASES (AIRCO)
LISLE IL

SHIP TO: AIRCO-NEW ENGLAND
HINGHAM MA

CUSTOMER PURCHASE ORDER NO.: 43594

CERTIFICATE DATE: 10/18/96

SANDVIK ORDER NO.: 94386

QUANTITY: PER PACKING NOTE

WORK ORDER / LOT NO.: 969410

TAG:

AWS A-5.9

STAINLESS STEEL WELDING WIRE TYPE ER 308L

DIAMETER: .045"

Filler Metal Analysis, %

Heat	C	Si	Mn	P	S	Cr	Ni
S710840	.015	.430	1.800	.016	.013	20.01	9.78
	Mo	Cb/Nb	Ta	Ti	Cu	Cb/Nb+Ta	N
	.050			.002	050	040	.050

PSI
QC
CW

1-12-97

The material has not come in contact with mercury or mercury-containing compounds.

"Material not touched by hand after final production process cleaning."

Material has been manufactured in accordance with Sandvik Steel Company Quality Manual Revision 10 dated October 1, 1995. Quality system approved to ISO-9002/ANSI/ASQC Q9002-1994.

PROCESS SYSTEMS
180 LBS
PO 70012R

Bengt H. Berg, Director, Quality and Metallurgy
Daniel Damiani, Quality Engineer

6119)(10)

BOC GASES
90 RESEARCH ROAD
HINGHAM, MA 02043

20

SANDVIK
Steel

We make Quality happen . . .

MATERIAL CERTIFICA

SANDVIK STEEL COMPANY

P.O. BOX 1220, SCRANTON, PA. 18501 PH. (717) 587-5191
PLANT LOCATION: INTERSTATE 81, WAVERLY EXIT 59

SOLD TO: BOC GASES (AIRCO)
LISLE IL

SHIP TO: PROCESS SYSTEMS INTL
WESTBORO MA

CUSTOMER PURCHASE ORDER NO.: 41276

CERTIFICATE DATE: 8/26/96

SANDVIK ORDER NO.: 88712

QUANTITY: PER PACKING NOTE

WORK ORDER / LOT NO.: 967451

TAG:

AWS A-5.9

STAINLESS STEEL WELDING WIRE TYPE ER 308L

DIAMETER: 3/32"

Filler Metal Analysis, %

Heat	C	Si	Mn	P	S	Cr	Ni
S710840	.015	.430	1.800	.016	.013	20.01	9.78

	Mo	Cb/Nb	Ta	Ti	Cu	Cb/Nb+Ta	N
	.050			.002	.050	.040	.050

PSI QC C#

10-7-96

The material has not come in contact with mercury or mercury-containing compounds.

"Material not touched by hand after final production process cleaning."

Material has been manufactured in accordance with Sandvik Steel Company Quality Manual Revision 10 dated October 1, 1995. Quality system approved to ISO-9002/ANSI/ASQC Q9002-1994.

Bengt H. Berg, Director, Quality and Metallurgy

15(66119)(10)

(21)

CUSTOMER ORIGINAL

SANDVIK Steel

We make Quality happen . . .

MATERIAL CERTIFICAT

SANDVIK STEEL COMPANY

P.O. BOX 1220, SCRANTON, PA. 18501 PH. (717) 587-5191

PLANT LOCATION: INTERSTATE 81, WAVERLY EXIT 59

SOLD TO: BOC GASES

SHIP TO: PROCESS SYSTEMS
WESTBORO MA 01581

CUSTOMER PURCHASE ORDER NO.: 700603R//V59049045000

CERTIFICATE DATE: 6/18/96

SANDVIK ORDER NO.: TK # 591854

QUANTITY: 60 LBS 308L x 36

WORK ORDER / LOT NO.: 965227

TAG:

AWS A-5.9

STAINLESS STEEL WELDING WIRE TYPE ER 308L

DIAMETER: 3/32"

Filler Metal Analysis, %

Heat	C	Si	Mn	P	S	Cr	Ni
S709276	.019	.430	1.800	.018	.012	19.92	9.82

	Mo	Cb/Nb	Ta	Ti	Cu	Cb/Nb+Ta	N
PSI QC CW	.080			.002	.130	.030	.045

The material has not come in contact with mercury or mercury-containing compounds.

"Material not touched by hand after final production process cleaning."

Material has been manufactured in accordance with Sandvik Steel Company Quality Manual Revision 10 dated October 1, 1995. Quality system approved to ISO-9002/ANSI/ASQC Q9002-1994.

Bengt H. Berg, Director, Quality and Metallurgy

15(66119)(10)

SANDVIK Steel

We make Quality happen . . .

MATERIAL CERTIFICATE

SANDVIK STEEL COMPANY
P.O. BOX 1220, SCRANTON, PA. 18501 PH. (717) 587-5191
PLANT LOCATION: INTERSTATE 81, WAVERLY EXIT 59

BOC GASES
90 RESEARCH ROAD
HINGHAM, MA 02043

SOLD TO:

SHIP TO: PROCESS SYSTEMS INTL
WESTBORO MA 01581

CUSTOMER PURCHASE ORDER NO.: 700603r/V59049045000
TK 591854-02

CERTIFICATE DATE: 6/17/96

SANDVIK ORDER NO.:

QUANTITY: 120 LBS er308L 1/16 x 36

WORK ORDER / LOT NO.: 965225

TAG:

AWS A-5.9

STAINLESS STEEL WELDING WIRE TYPE ER 308L DIAMETER: 1/16"

Filler Metal Analysis, %

Heat	C	Si	Mn	P	S	Cr	Ni
S708727	.014	.390	1.800	.016	.012	20.20	9.87

	Mo	Cb/Nb	Ta	Ti	Cu	Cb/Nb+Ta	N
	.050			.003	.040	.030	.060

PSI QC

The material has not come in contact with mercury or mercury-containing compounds.

"Material not touched by hand after final production process cleaning."

Material has been manufactured in accordance with Sandvik Steel Company Quality Manual Revision 10 dated October 1, 1995. Quality system approved to ISO-9002/ANSI/ASQC Q9002-1994.

Bengt H. Berg, Director, Quality and Metallurgy

15(66119)(10)

23

CUSTOMER ORIGINAL

SANDVIK Steel

We make Quality happen...

MATERIAL CER...

SANDVIK STEEL COMPANY

P.O. BOX 1220, SCRANTON, PA. 18501 PH. (717) 587-5191
PLANT LOCATION: INTERSTATE 81, WAVERLY EXIT 59

SOLD TO: BOC GASES (AIRCO)
LISLE IL

SHIP TO: AIRCO-NEW ENGLAND
HINGHAM MA
process systems intl
westboro, Ma.

CUSTOMER PURCHASE ORDER NO.: 42100

CERTIFICATE DATE: 9/27/96

SANDVIK ORDER NO.: 90814

PO-700627-V59049-041

QUANTITY: PER PACKING NOTE

WORK ORDER / LOT NO.: 968845

TAG:

AWS A-5.9

STAINLESS STEEL WELDING WIRE TYPE ER 308L

DIAMETER: .045"

Filler Metal Analysis, %

Heat	C	Si	Mn	P	S	Cr	Ni
S437864	.013	.430	1.720	.020	.013	19.88	9.98

PSI QC CW

Mo	Cb/Nb	Ta	Ti	Cu	Cb/Nb+Ta	N
.250	.010		.005	.150		.055

The material has not come in contact with mercury or mercury-containing compounds.

"Material not touched by hand after final production process cleaning."

Material has been manufactured in accordance with Sandvik Steel Company Quality Manual Revision 10 dated October 1, 1995. Quality system approved to ISO-9002/ANSI/ASQC Q9002-1994.

Bengt H. Berg, Director, Quality and Metallurgy
Daniel Damiani, Quality Engineer

15(66119)(10)

BOC G...
90 RESEARCH R...
HINGHAM, MA ...

(29)

SANDVIK Steel

We make Quality happen . . .

MATERIAL CERTIFICA

SANDVIK STEEL COMPANY

P.O. BOX 1220, SCRANTON, PA. 18501 PH. (717) 587-5191

PLANT LOCATION: INTERSTATE 81, WAVERLY EXIT 59

OLD TO: BOC GASES (AIRCO)
LISLE IL

SHIP TO: AIRCO-NEW ENGLAND
HINGHAM MA

CUSTOMER PURCHASE ORDER NO.: 42100

CERTIFICATE DATE: 9/04/96

SANDVIK ORDER NO.: 90816

QUANTITY: PER PACKING NOTE

WORK ORDER / LOT NO.: 967820

TAG:

AWS A-5.9

STAINLESS STEEL WELDING WIRE TYPE ER 308L

DIAMETER: 1/8"

Filler Metal Analysis, %

Heat	C	Si	Mn	P	S	Cr	Ni
S710840	.015	.430	1.800	.016	.013	20.01	9.78

PSI QC CW

Mo	Cb/Nb	Ta	Ti	Cu	Cb/Nb+Ta	N
.050			.002	.050	.040	.050

The material has not come in contact with mercury or mercury-containing compounds.

"Material not touched by hand after final production process cleaning."

Material has been manufactured in accordance with Sandvik Steel Company Quality Manual Revision 10 dated October 1, 1995. Quality system approved to ISO-9002/ANSI/ASQC Q9002-1994.

PROCESS SYSTEMS
700627-R/V59049-044
TK 693421

Bengt H. Berg, Director, Quality and Metallurgy

240 LB

15(66119)(10)

BOC GASES
90 RESEARCH ROAD
HINGHAM, MA 02043

2

SANDVIK Steel

We make Quality happen . . .

MATERIAL CERTIFICAT

SANDVIK STEEL COMPANY

P.O. BOX 1220, SCRANTON, PA. 18501 PH. (717) 587-5191

PLANT LOCATION: INTERSTATE 81, WAVERLY EXIT 59

OLD TO:	BOC GASES (AIRCO) LISLE IL	SHIP TO:	AIRCO-NEW ENGLAND HINGHAM MA
USTOMER PURCHASE ORDER NO.:	42100	CERTIFICATE DATE:	9/04/96
ANDVIK ORDER NO.:	90816	QUANTITY:	PER PACKING NOTE
'ORK ORDER / LOT NO.:	967818	TAG:	

AWS A-5.9

STAINLESS STEEL WELDING WIRE TYPE ER 308L DIAMETER: 1/16"

Filler Metal Analysis, %

Heat	C	Si	Mn	P	S	Cr	Ni
S710840	.015	.430	1.800	.016	.013	20.01	9.78
	Mo	Cb/Nb	Ta	Ti	Cu	Cb/Nb+Ta	N
	.050	---	---	.002	.050	.040	.050

PSI QC CW

The material has not come in contact with mercury or mercury-containing compounds.

"Material not touched by hand after final production process cleaning."

Material has been manufactured in accordance with Sandvik Steel Company Quality Manual Revision 10 dated October 1, 1995. Quality system approved to ISO-9002/ANSI/ASQC Q9002-1994.

PROCESS SYSTEMS
700627-R/V59049-042
TK 693415
50 LB.

Bengt H. Berg, Director, Quality and Metallurgy

5(66119)(10)

BOC GA[illegible]
[illegible]CH ROAD
[illegible]A 02043

(2)

SANDVIK Steel

We make Quality happen...

MATERIAL CERTIFICATE

SANDVIK STEEL COMPANY

P.O. BOX 1220, SCRANTON, PA. 18501 PH. (717) 587-5191
PLANT LOCATION: INTERSTATE 81, WAVERLY EXIT 59

SOLD TO: BOC GASES (AIRCO)
LISLE IL

SHIP TO: process systems

CUSTOMER PURCHASE ORDER NO.: 693415

CERTIFICATE DATE: 10/03/96

SANDVIK ORDER NO.:

QUANTITY: 60 lbs

WORK ORDER / LOT NO.: 700627-r/v59049-042

TAG:

AWS A-5.9

STAINLESS STEEL WELDING WIRE TYPE ER 308L

DIAMETER: 1/16"

Filler Metal Analysis, %

Heat	C	Si	Mn	P	S	Cr	Ni
S437864	.013	.430	1.720	.020	.013	19.88	9.98

	Mo	Cb/Nb	Ta	Ti	Cu	Cb/Nb+Ta	N
	.250	.010		.005	.150		.055

PSI QC CW

The material has not come in contact with mercury or mercury-containing compounds.

"Material not touched by hand after final production process cleaning."

Material has been manufactured in accordance with Sandvik Steel Company Quality Manual Revision 10 dated October 1, 1995. Quality system approved to ISO-9002/ANSI/ASQC Q9002-1994.

BOC GASES
RESEARCH ROAD
HINGHAM, MA 02043

Bengt H. Berg, Director, Quality and Metallurgy
Daniel Damiani, Quality Engineer

15(661(9)(10)

5

(2)

SANDVIK Steel

We make Quality happen . . .

MATERIAL CERTIFICA

SANDVIK STEEL COMPANY

P.O. BOX 1220, SCRANTON, PA. 18501 PH. (717) 587-5191

PLANT LOCATION: INTERSTATE 81, WAVERLY EXIT 59

SOLD TO: BOC GASES (AIRCO)
LISLE IL

SHIP TO: AIRCO-NEW ENGLAND
HINGHAM MA

CUSTOMER PURCHASE ORDER NO.: 42100

CERTIFICATE DATE: 9/09/96

SANDVIK ORDER NO.: 90816

QUANTITY: PER PACKING NOTE

WORK ORDER / LOT NO.: 967819

TAG:

AWS A-5.9

STAINLESS STEEL WELDING WIRE TYPE ER 308L

DIAMETER: 3/32"

Filler Metal Analysis, %

Heat	C	Si	Mn	P	S	Cr	Ni
S437864	.013	.430	1.720	.020	.013	19.88	9.98

PSI OC CW

Mo	Cb/Nb	Ta	Ti	Cu	Cb/Nb+Ta	N
.250	.010		.005	.150		.055

The material has not come in contact with mercury or mercury-containing compounds.

"Material not touched by hand after final production process cleaning."

Material has been manufactured in accordance with Sandvik Steel Company Quality Manual Revision 10 dated October 1, 1995. Quality system approved to ISO-9002/ANSI/ASQC Q9002-1994.

PROCESS SYSTEMS
700627-R/V59049-0
TK 693420
240 LB.

Bengt H. Berg, Director, Quality and Metallurgy

15(66119)(10)

BOC GASES
80 RESEARCH ROAD
HINGHAM, MA 02043

28

AlcoTec

A Partnership of Alcoa Weld Wire Company, Inc.
and Aluminum Technology Corporation

AlcoTec Wire Company
2750 Aero Park Drive
Traverse City, MI 49686 USA
(616) 941-4111 Phone
(616) 941-9154 Fax

05/07/96

CERTIFIED MATERIAL REPORT

Alloy	Diameter	Package	Lot Number
R5183	.125	TIG Rod Box	362769

P.O.# - 72454

PSI
QC
CW

Chemical Composition limits

Element	Minimum %	Maximum %
Si	---	0.40
Fe	---	0.40
Cu	---	0.10
Mn	0.50	1.0
Mg	4.3	5.2
Cr	0.05	0.25
Zn	---	0.25
Ti	---	0.15
Be	---	0.0008
Other Each	---	0.05
Other Total	---	0.15
Aluminum	Remainder	

AlcoTec Wire Company hereby certifies that the material covered by this report has been inspected in accordance with and been found to meet the applicable requirements of specification AWS A5.10-92 and any order requirements listed below.

All Packaging materials are in compliance with CONEG legislation.

Additional Order Requirements:

Signature

Certifying Signature

29

HARRIS
SOLDERING BRAZING & WELDING PRODUCTS

J. W. HARRIS CO., INC. | 10930 DEERFIELD ROAD | CINCINNATI, OHIO 45242

J..W. Harris Comp
Certificate of Compl

Date 10-17-96

Sold To: AIRCO NEW ENGLAND
90 RESEARCH ROAD
HINGHAM, MA 02043

Shipped To: PROCESS SYSTEMS INTL
WESTBORO MA.

Date Shipped 10-18-96

Order No. 712222

P.O. No. PO#

Item	Weight	Size	Alloy	Heat No.
1.	9LB	5/32 X 36	ALUM	AA1005183D
2.	10LB	5/32 X 36	ALUM	7995
3.				

PS QC CW

Comments: P.O. 700643-R/V5904904302

Alloy	AWS A5.10-88 ASME SFA5.10		QQ-R-566B Class	Si	Fe	Cu	Mn	Mg	Cr	Zn	Ti	Percent Other Element Each	Ti
1100 Aluminum (B)	ER1100	R1100	1100	A	A	0.05-0.20	0.05			0.10		0.05	
2319 Aluminum (C)	ER2319	R2319	2319	0.20	0.30	5.8-6.8	0.20-0.40	0.02		0.10	0.10-0.20	0.05	
4043 Aluminum	ER4043	R4043	4043	4.5-6.0	0.8	0.30	0.05	0.05		0.10	0.20	0.05	
710 Aluminum	ER4047	R4047	4047	11.0-13.0	0.8	0.30	0.15	0.10		0.20		0.05	
5183 Aluminum	ER5183	R5183	5183	.40	0.40	0.10	0.50-1.0	4.3-5.2	0.05-0.25	0.25	0.15	0.05	
5356 Aluminum	ER5356	R5356	5356	0.25	0.40	0.10	0.05-0.20	4.5-5.5	0.05-0.20	0.10	0.06-0.20	0.05	
5554 Aluminum	ER5554	R5554	5554	0.25	0.40	0.10	0.50-1.0	2.4-3.0	0.05-0.20	0.25	0.05-0.20	0.05	
5556 Aluminum	ER5556	R5556	5556	0.25	0.40	0.10	0.50-1.0	4.7-5.5	0.05-0.20	0.25	0.05-0.20	0.05	
5654 Aluminum	ER5654	R5654	5654	D	D	0.05	0.01	3.1-3.9	0.15-0.35	0.20	0.05-0.15	0.05	

NOTES:

1. Single values shown are maximum percentages, except where a minimum is specified.
2. Beryllium shall not exceed 0.0008 percent, all alloys.
A. Silicon plus iron shall not exceed 0.95 percent.
B. The aluminum content is the difference between 100.00 percent and the sum of all other metallic elements present in amounts of 0.010 percent or more each, expressed to the second decimal before determing the sum, and shall not be less than 99.0.
C. Vanadium content shall be 0.05-0.15 percent. Zirconium content shall be 0.10-0.25 percent.
D. Silicon plus iron shall not exceed 0.45 percent.

BOC G...
90 RESEARCH ...
HINGHAM, MA 02043

30

HARRIS
SOLDERING, BRAZING & WELDING PRODUCTS

J. W. HARRIS CO., INC. | 10930 DEERFIELD ROAD | CINCINNATI, OHIO 45242

J. W. Harris Comp
Certificate of Compl

Date _____

Sold To:
AIRCO NEW ENGLAND
90 RESEARCH ROAD
HINGHAM, MA 02043

Shipped To: PROCESS SYSTEMS INTL

Date Shipped 10-25-96

P.O. No. PO# PO 700643R/V5904.9043000

Order No. 713960-01

Item	Weight	Size	Alloy	Heat No.
1.	50LB	5/32	ALUM	0233
2.				
3.				

PSI QC CW

Comments:

BOC
90 RESEARCH
HINGHAM, MA 02043

Alloy	AWS A5.10-88 ASME SFA5.10		QQ-R-566B Class	Si	Fe	Cu	Mn	Mg	Cr	Zn	Ti	Percent Other Element Each	Ti
1100 Aluminum (B)	ER1100	R1100	1100	A	A	0.05-0.20	0.05			0.10		0.05	
2319 Aluminum (C)	ER2319	R2319	2319	0.20	0.30	5.8-6.8	0.20-0.40	0.02		0.10	0.10-0.20	0.05	
4043 Aluminum	ER4043	R4043	4043	4.5-6.0	0.8	0.30	0.05	0.05		0.10	0.20	0.05	
718 Aluminum	ER4047	R4047	4047	11.0-13.0	0.8	0.30	0.15	0.10		0.20		0.05	
5183 Aluminum	ER5183	R5183	5183	.40	0.40	0.10	0.50-1.0	4.3-5.2	0.05-0.25	0.25	0.15	0.05	
5356 Aluminum	ER5356	R5356	5356	0.25	0.40	0.10	0.05-0.20	4.5-5.5	0.05-0.20	0.10	0.06-0.20	0.05	
5554 Aluminum	ER5554	R5554	5554	0.25	0.40	0.10	0.50-1.0	2.4-3.0	0.05-0.20	0.25	0.05-0.20	0.05	
5556 Aluminum	ER5556	R5556	5556	0.25	0.40	0.10	0.50-1.0	4.7-5.5	0.05-0.20	0.25	0.05-0.20	0.05	
5654 Aluminum	ER5654	R5654	5654	D	D	0.05	0.01	3.1-3.9	0.15-0.35	0.20	0.05-0.15	0.05	

NOTES:

1. Single values shown are maximum percentages, except where a minimum is specified.
2. Beryllium shall not exceed 0.0008 percent, all alloys.
A. Silicon plus iron shall not exceed 0.95 percent.
B. The aluminum content is the difference between 100.00 percent and the sum of all other metallic elements present in amounts of 0.010 percent or more each, expressed to the second decimal before determing the sum, and shall not be less than 99.0.
C. Vanadium content shall be 0.05-0.15 percent. Zirconium content shall be 0.10-0.25 percent.
D. Silicon plus iron shall not exceed 0.45 percent.

We certify that the items

FROM :AIRCO/BOC GASES HINGHM TO 5083705930 1996.10-31 04:01 #926 P.02/02

HARRIS
SOLDERING BRAZING & WELDING PRODUCTS

J. W. HARRIS CO., INC. | 10930 DEERFIELD ROAD | CINCINNATI, OHIO 45242

J..W. Harris Co
Certificate of Con

Sold To:
AIRCO NEW ENGLAND
90 RESEARCH ROAD
HINGHAM, MA 02043

Shipped To: PROCESS SYSTEMS
700643-R/V5904904300

Date 10-31-96

Date Shipped

Order No. 712225

P.O. No. PO#

Item	Weight	Size	Alloy	Heat No.
1.	50	5/32	ALUM	96248
2.				
3.				

PSI
QC
CW

Comments:

Alloy	AWS A.510-00, ASME SFA.5.10		QQ-R-566D Class	Si	Fe	Cu	Mn	Mg	Cr	Zn	Ti	Percer Other Elen Each
1100 Aluminum (B)	ER1100	R1100	1100	A	A	0.05-0.20	0.05			0.10		0.05
2319 Aluminum (C)	ER2319	R2319	2319	0.20	0.30	5.8-6.8	0.20-0.40	0.02		0.10	0.10-0.20	0.05
4043 Aluminum	ER4043	R4043	4043	4.5-6.0	0.8	0.30	0.05	0.05		0.10	0.20	0.05
718 Aluminum	ER4047	R4047	4047	11.0-13.0	0.8	0.30	0.15	0.10		0.20		0.05
5183 Aluminum	ER5183	R5183	5183	.40	0.40	0.10	0.50-1.0	4.3-5.2	0.05-0.25	0.25	0.15	0.05
5356 Aluminum	ER5356	R5356	5356	0.25	0.40	0.10	0.05-0.20	4.5-5.5	0.05-0.20	0.10	0.06-0.20	0.05
5554 Aluminum	ER5554	R5554	5554	.0.25	0.40	0.10	0.50-1.0	2.4-3.0	0.05-0.20	0.25	0.05-0.20	0.05
5556 Aluminum	ER5556	R5556	5556	0.25	0.40	0.10	0.50-1.0	4.7-5.5	0.05-0.20	0.25	0.05-0.20	0.05
5654 Aluminum	ER5654	R5654	5654	D	D	0.05	0.01	3.1-3.9	0.15-0.35	0.20	0.05-0.15	0.05

NOTES:

1. Single values shown are maximum percentages, except where a minimum is specified.
2. Beryllium shall not exceed 0.0008 percent, all alloys.
A. Silicon plus iron shall not exceed 0.95 percent.
D. The aluminum content is the difference between 100.00 percent and the sum of all other metallic elements present in amounts of 0.010 percent or more each, expressed to the second decimal before determing the sum, and shall not be less than 99.0.
C. Vanadium content shall be 0.05-0.15 percent. Zirconium content shall be 0.10-0.25 percent.
D. Silicon plus iron shall not exceed 0.45 percent.

We certify that the items and/or materials lised above are in accordanc
applicable purchase specifi

AlcoTec

A Partnership of Alcoa Weld Wire Company, Inc.
and Aluminum Technology Corporation

AlcoTec Wire Company
2750 Aero Park Drive
Traverse City, MI 49686 USA
(616) 941-4111 Phone
(616) 941-9154 Fax
alcotec@traverse.com E-mail

11/13/96

CERTIFIED MATERIAL REPORT

Alloy	Diameter	Package	Lot Number
R5183	.156	TIG Rod Box	362884

P.O.# - 86330

Chemical Composition limits

Element	Minimum %	Maximum %
Si	---	0.40
Fe	---	0.40
Cu	---	0.10
Mn	0.50	1.0
Mg	4.3	5.2
Cr	0.05	0.25
Zn	---	0.25
Ti	---	0.15
Be	---	0.0008
Other Each	---	0.05
Other Total	---	0.15
Aluminum	Remainder	

PSI @ CW

AlcoTec Wire Company hereby certifies that the material covered by this report has been inspected in accordance with and been found to meet the applicable requirements of specification AWS A5.10-92 and any order

All Packaging materials are in compliance with CONEG legislation.

Additional Order Requirements:

V.P. - Quality Control

AlcoTec

A Partnership of Alcoa Weld Wire Company, Inc.
and Aluminum Technology Corporation

AlcoTec Wire Company
2750 Aero Park Drive
Traverse City, MI 49686 USA
(616) 941-4111 Phone
(616) 941-9154 Fax
alcotec@traverse.com E-mail

11/11/96

CERTIFIED MATERIAL REPORT

Alloy	Diameter	Package	Lot Number
R5183	.156	TIG Rod Box	362884

P.O.# - 86330

Chemical Composition limits

Element	Minimum %	Maximum %
Si	---	0.40
Fe	---	0.40
Cu	---	0.10
Mn	0.50	1.0
Mg	4.3	5.2
Cr	0.05	0.25
Zn	---	0.25
Ti	---	0.15
Be	---	0.0008
Other Each	---	0.05
Other Total	---	0.15
Aluminum	Remainder	

PSI
QC
CW

AlcoTec Wire Company hereby certifies that the material covered by this report has been inspected in accordance with and been found to meet the applicable requirements of specification AWS A5.10-92 and any order requirements listed below.

All Packaging materials are in compliance with CONEG legislation.

Additional Order Requirements:

V.P. - Quality Control

34

MATERIAL CERTIFICATE

SANDVIK Steel

We make Quality happen...

SANDVIK STEEL COMPANY
P.O. BOX 1220, SCRANTON, PA. 18501 PH. (717) 587-5191
PLANT LOCATION: INTERSTATE 81, WAVERLY EXIT 59

SOLD TO: BOC GASES (AIRCO)
LISLE IL

SHIP TO: PROCESS SYSTEMS

CUSTOMER PURCHASE ORDER NO.: 700650-R/VS904904500

CERTIFICATE DATE: 9/04/96

SANDVIK ORDER NO.: 90816

QUANTITY: 60 LB

WORK ORDER / LOT NO.:

TAG:

AWS A-5.9

STAINLESS STEEL WELDING WIRE TYPE ER 308L

DIAMETER: 1/8"

PSI QC CW

Filler Metal Analysis, %

Heat	C	Si	Mn	P	S	Cr	Ni
S710840	.015	.430	1.800	.016	.013	20.01	9.78

	Mo	Cb/Nb	Ta	Ti	Cu	Cb/Nb+Ta	N
	.050	—		.002	.050	.040	.050

The material has not come in contact with mercury or mercury-containing compounds.

"Material not touched by hand after final production process cleaning."

Material has been manufactured in accordance with Sandvik Steel Company Quality Manual Revision 10 dated October 1, 1995. Quality system approved to ISO-9002/ANSI/ASQC Q9002-1994.

Bengt H. Berg, Director, Quality and Metallurgy

15(66119)(10)

BOC GASES
RESEARCH LTD
HINGHAM, MA 02043

CUSTOMER ORIGINAL

SANDVIK Steel

We make Quality happen...

MATERIAL CERTIFICATE

SANDVIK STEEL COMPANY
P.O. BOX 1220, SCRANTON, PA. 18501, PH. (717) 587-5191
PLANT LOCATION: INTERSTATE 81, WAVERLY EXIT 59

SOLD TO: BOC GASES (AIRCO)
LISLE IL

SHIP TO: PROCESS SYSTEM

CUSTOMER PURCHASE ORDER NO.: 700650-R/N5904904500

CERTIFICATE DATE: 10/04/96

SANDVIK ORDER NO.: 92899

QUANTITY: 1840

WORK ORDER / LOT NO.:

TAG:

AWS A-5.9

PSI QC CW

STAINLESS STEEL WELDING WIRE TYPE ER 308L

DIAMETER: 1/8"

Filler Metal Analysis, %

Heat	C	Si	Mn	P	S	Cr	Ni
S437864	.013	.430	1.720	.020	.013	19.88	9.98

	Mo	Cb/Nb	Ta	Ti	Cu	Cb/Nb+Ta	N
	.250	.010		.005	.150		.055

The material has not come in contact with mercury or mercury-containing compounds.

"Material not touched by hand after final production process cleaning."

Material has been manufactured in accordance with Sandvik Steel Company Quality Manual Revision 10 dated October 1, 1995. Quality system approved to ISO-9002/ANSI/ASQC Q9002-1994.

Bengt H. Berg, Director, Quality and Metallurgy
Daniel Damiani, Quality Engineer

15(66119)(10)

5

BOC GASES
RESEARCH ROAD
INGHAM, MA 02043

CUSTOMER ORIGINAL

HARRIS
SOLDERING, BRAZING & WELDING PRODUCTS

J. W. HARRIS CO., INC. | 10930 DEERFIELD ROAD | CINCINNATI, OHIO 45242

J. W. Harris Compl
Certificate of Comp

Date _____

Sold To: AIRCO NEW ENGLAND
90 RESEARCH ROAD
HINGHAM, MA 02043

Shipped To: Process Systems Int'L
60 70015R/7741000

Date Shipped 3-28-97

Order No. 797282

P.O. No. PO#

Item	Weight	Size	Alloy	Heat No.
1.	40 LB	1/16 x 36	ALUM	0268
2.				
3.				

PSI QC CVI

Comments:

BOC GASES
90 RESEARCH ROAD
HINGHAM, MA 02043

Alloy	AWS A5.10-88, ASME SFA5.10		QQ-R-566B Class	Si	Fe	Cu	Mn	Mg	Cr	Zn	Ti	Percent Other Elemen Each	
1100 Aluminum (B)	ER1100	R1100	1100	A	A	0.05-0.20	0.05			0.10		0.05	
2319 Aluminum (C)	ER2319	R2319	2319	0.20	0.30	5.8-6.8	0.20-0.40	0.02		0.10	0.10-0.20	0.05	
4043 Aluminum	ER4043	R4043	4043	4.5-6.0	0.8	0.30	0.05	0.05		0.10	0.20	0.05	
718 Aluminum	ER4047	R4047	4047	11.0-13.0	0.8	0.30	0.15	0.10		0.20		0.05	
5183 Aluminum	ER5183	R5183	5183	.40	0.40	0.10	0.50-1.0	4.3-5.2	0.05-0.25	0.25	0.15	0.05	
5356 Aluminum	ER5356	R5356	5356	0.25	0.40	0.10	0.05-0.20	4.5-5.5	0.05-0.20	0.10	0.06-0.20	0.05	
5554 Aluminum	ER5554	R5554	5554	0.25	0.40	0.10	0.50-1.0	2.4-3.0	0.05-0.20	0.25	0.05-0.20	0.05	
5556 Aluminum	ER5556	R5556	5556	0.25	0.40	0.10	0.50-1.0	4.7-5.5	0.05-0.20	0.25	0.05-0.20	0.05	
5654 Aluminum	ER5654	R5654	5654	D	D	0.05	0.01	3.1-3.9	0.15-0.35	0.20	0.05-0.15	0.05	

NOTES:

1. Single values shown are maximum percentages, except where a minimum is specified.
2. Beryllium shall not exceed 0.0000 percent, all alloys.
A. Silicon plus iron shall not exceed 0.95 percent.
D. The aluminum content is the difference between 100.00 percent and the sum of all other metallic elements present in amounts of 0.010 percent or more each, expressed to the second decimal before determing the sum, and shall not be less than 99.0.
C. Vanadium content shall be 0.05-0.15 percent. Zirconium content shall be 0.10-0.25 percent.
D. Silicon plus iron shall not exceed 0.45 percent.

We certify that the items and/or materials lised above are in accordance applicable purchase specifications having passed our ections as not

HARRIS-WELCO | 1051 YORK ROAD P.O. BOX 69 | KINGS MOUNTAIN, NC 28086

SOLDERING, BRAZING & WELDING PRODUCTS

CERTIFICATE OF COMPLIANCE

RML ISSUE DATE: 04-15-96

PROCESS SYSTEMS
PO 700/SR/774/1000
10 LBS 4043 1/16X36

HEAT NUMBER/LOT NUMBER: 0243

CHEMICAL COMPOSITION LIMITS

PSI QC CW

ALLOY: 4043
SPEC : AWS A5.10R/ER4043/AMS 4190D
ASME SFA 5.10/QQ-R-566-B

SILICON	4.500 -	6.000	TITANIUM		.200
COPPER		.300	MAGNESIUM		.050
IRON		.800	ZINC		.100
BERYLLIUM		.0008	REMAINDER		ALUMINUM
OTHER		.15			

SINGLE VALUES ARE MAXIMUM UNLESS OTHERWISE SPECIFIED.

SAFETY SILV, STAY SILV, STAY CLEAN, STAY BRITE & BRIDGIT ARE REGISTERED TRADEMARKS OF J.W. HARRIS CO., INC

WE CERTIFY THAT THE ITEMS AND/OR MATERIALS LISTED ABOVE ARE IN ACCORDANCE WITH ALL APPLICABLE PURCHASE SPECIFICATIONS HAVING PASSED OUR INSPECTIONS AS NOTED.

Robin M. Poe
CERTIFICATION CLERK

BOC GASES
90 RESEARCH ROAD
HINGHAM, MA 02043

(35)

SANDVIK Steel

We make Quality happen

MATERIAL CERTIFICAT

SANDVIK STEEL COMPANY
P.O. BOX 1220, SCRANTON, PA. 18501 PH. (717) 587-5191
PLANT LOCATION: INTERSTATE 81, WAVERLY EXIT 59

SOLD TO: PROCESS SYSTEMS

SHIP TO: AIRCO-NEW ENGLAND
HINGHAM MA

CUSTOMER PURCHASE ORDER NO.: 7005R/774101500

CERTIFICATE DATE: 3/20/97

SANDVIK ORDER NO.:

QUANTITY: 180 LBS.

WORK ORDER / LOT NO.:

TAG:

AWS A-5.9

STAINLESS STEEL WELDING WIRE TYPE ER 308L

DIAMETER: 1/16"

Filler Metal Analysis, %

Heat	C	Si	Mn	P	S	Cr	Ni
S711375	.007	.400	1.800	.014	.012	20.02	9.85

PSI QC CW

Mo	Cb/Nb	Ta	Ti	Cu	Cb/Nb+Ta	N
.010			.002	.030	.030	.055

The material has not come in contact with mercury or mercury-containing compounds.

"Material not touched by hand after final production process cleaning."

Material has been manufactured in accordance with Sandvik Steel Company Quality Manual Revision 10 dated October 1, 1995. Quality system approved to ISO-9002/ANSI/ASQC Q9002-1994.

Keith M. Hottle, Manager, Quality & Metallurgy
Celeste Brennan, Sr. Quality Engineer

Celeste Brennan/cc

15(66119)(10)

BOC GASES
90 RESEARCH ROAD
HINGHAM, MA 02043

(39)

SANDVIK Steel

We make Quality happen...

MATERIAL CERTIFICA

SANDVIK STEEL COMPANY

P.O. BOX 1220, SCRANTON, PA. 18501 PH. (717) 587-5191
PLANT LOCATION: INTERSTATE 81, WAVERLY EXIT 59

SOLD TO: BOC GASES (AIRCO)
LISLE IL

SHIP TO: AIRCO-NEW ENGLAND
HINGHAM MA

CUSTOMER PURCHASE ORDER NO.: 42100

CERTIFICATE DATE: 9/09/96

SANDVIK ORDER NO.: 90816

PSI QC CW

QUANTITY: PER PACKING NOTE

WORK ORDER / LOT NO.: 967819

TAG:

AWS A-5.9

STAINLESS STEEL WELDING WIRE TYPE ER 308L

DIAMETER: 3/32"

Filler Metal Analysis, %

Heat	C	Si	Mn	P	S	Cr	Ni
S710840	.013	.430	1.720	.020	.013	19.88	9.98

Mo	Cb/Nb	Ta	Ti	Cu	Cb/Nb+Ta	N
.250	.010		.005	.150		.055

The material has not come in contact with mercury or mercury-containing compounds.

"Material not touched by hand after final production process cleaning."

Material has been manufactured in accordance with Sandvik Steel Company Quality Manual Revision 10 dated October 1, 1995. Quality system approved to ISO-9002/ANSI/ASQC Q9002-1994.

PROCESS SYSTEMS
70018R/774101500

Bengt H. Berg, Director, Quality and Metallurgy

15(66119)(10)

BOC GASES
90 RESEARCH ROAD
HINGHAM, MA 02043

4

SANDVIK Steel

We make Quality happen

MATERIAL CERTIFICAT

SANDVIK STEEL COMPANY

P.O. BOX 1220, SCRANTON, PA. 18501 PH. (717) 587-5191

PLANT LOCATION: INTERSTATE 81, WAVERLY EXIT 59

SOLD TO: BOC GASES (AIRCO)
LISLE IL

SHIP TO: AIRCO-NEW ENGLAND
HINGHAM MA

CUSTOMER PURCHASE ORDER NO.: 46682

CERTIFICATE DATE: 4/21/97

SANDVIK ORDER NO.: 12603

QUANTITY: PER PACKING NOTE

WORK ORDER / LOT NO.: 978457

TAG:

AWS A-5.9

STAINLESS STEEL WELDING WIRE TYPE ER 308L

DIAMETER: 3/32"

Filler Metal Analysis, %

Heat	C	Si	Mn	P	S	Cr	Ni
S712976 -60LB	.013	.440	1.800	.015	.015	19.96	9.63

PSI QC CW 4-28-97

Mo	Cb/Nb	Ta	Ti	Cu	Cb/Nb+Ta	N
.070			.002	.060	.030	.035

PROCESS SYSTEMS

P.O. 70018R/77410500

Shipped 4-25-97 ORDER #805966-01

The material has not come in contact with mercury or mercury-containing compounds.

"Material not touched by hand after final production process cleaning."

Material has been manufactured in accordance with Sandvik Steel Company Quality Manual Revision 10 dated October 1, 1995. Quality system approved to ISO-9002/ANSI/ASQC Q9002-1994.

Keith M. Hottle, Manager, Quality & Metallurgy
Celeste Brennan, Sr. Quality Engineer

Celeste Brennan/cp

15(66119)(10)

BOC GASES
90 RESEARCH ROAD
HINGHAM, MA 02043

(3) (41)

SANDVIK Steel

We make Quality happen...

MATERIAL CERTIFICAT

SANDVIK STEEL COMPANY
P.O. BOX 1220, SCRANTON, PA. 18501 PH. (717) 587-5191
PLANT LOCATION: INTERSTATE 81, WAVERLY EXIT 59

SOLD TO: BOC GASES (AIRCO)
LISLE IL

SHIP TO: PROCESS SYSTEMS INTL
WESTBOTO MA

CUSTOMER PURCHASE ORDER NO.: 47334

CERTIFICATE DATE: 4/29/97

SANDVIK ORDER NO.: 14445

QUANTITY: PER PACKING NOTE

WORK ORDER / LOT NO.: 970470

TAG:

AWS A-5.9

STAINLESS STEEL WELDING WIRE TYPE ER 308L

DIAMETER: .035"

Filler Metal Analysis, %

Heat	C	Si	Mn	P	S	Cr	Ni
S711375	.007	.400	1.800	.014	.012	20.02	9.85

	Mo	Cb/Nb	Ta	Ti	Cu	Cb/Nb+Ta	N
	.010			.002	.030	.030	.055

PSI QC CW

The material has not come in contact with mercury or mercury-containing compounds.

Keith M. Kottle, Manager, Quality & Metallurgy

15(03030, REV.2)(10)

CUSTOMER ORIGINAL

42

AlcoTec

A Partnership of Alcoa Weld Wire Company, Inc.
and Aluminum Technology Corporation

AlcoTec Wire Company
2750 Aero Park Drive
Traverse City, MI 49686 USA
(616) 941-4111 Phone
(616) 941-9154 Fax
alcotec@traverse.com E-mail

1/8

01/13/97

CERTIFIED MATERIAL REPORT

Alloy	Diameter	Package	Lot Number
R5183	.125	TIG Rod Box	363423

P.O.# - 93118

PSI QC CW

Chemical Composition limits

Element	Minimum %	Maximum %
Si	---	0.40
Fe	---	0.40
Cu	---	0.10
Mn	0.50	1.0
Mg	4.3	5.2
Cr	0.05	0.25
Zn	---	0.25
Ti	---	0.15
Be	---	0.0008
Other Each	---	0.05
Other Total	---	0.15
Aluminum	Remainder	

AlcoTec Wire Company hereby certifies that the material covered by this report has been inspected in accordance with and been found to meet the applicable requirements of specification AWS A5.10-92 and any order requirements listed below.

All Packaging materials are in compliance with CONEG legislation.

Additional Order Requirements:

V.P. - Quality Control

RANOR, INC

BELLA DRIVE, P.O. BOX 458 • WESTMINSTER, MASSACHUSETTS 01473

Certificate of Compliance

The undersigned hereby certifies that the following material and/or services are in accordance with the requirements of Process Systems International, Inc.

Purchase Order Number 555822-00 and RANOR, INC Shop Order Number 7300FM

Quantity	Description, Part or Assembly Number	Material Type	Specification Number or Material Heat Number
1	Beam Splitter Chamber Per V049-4-003 Rev. 0 Ranor s/n 7300-09 Dimensional Inspection Reports & Stress Relief Chart attached	SA240-304L	Material Supplied by P.S.I., Inc.

RSI DOC # V049-8-634-09

Signature

Title Assistant Quality Assurance Manager

Date 6 - 24 - 97

This certification shall be completed and signed by either an officer of the company, or a designated responsible person.

RANOR, INC

NONCONFORMANCE REPORT

FORM QA 12.1 REV. 6 (07/30/96)

NCR NUMBER	PAGE
NCR- 1058	PAGE 1 OF 3 SKETCH ATTACHED ☒

JOB NUMBER	CUSTOMER	PURCHASE ORDER NUMBER	QUANTITY
7300 Flm	P.S.I.	555822-00	1

PART DESCRIPTION	DOCUMENT NUMBER AND REVISION	SERIAL NUMBER
BSC SHELL	V049-4-003 REV-3	003-09

CODE/SPECIFICATION: ☐ ASME SECTION III ☐ SAFETY RELATED ☐ ASME SECTION VIII ☐ MIL SPEC ☒ COMMERCIAL

DESCRIPTION OF NONCONFORMANCE

ITEM	REQUIREMENT	NONCONFORMANCE
1	NOTE: 11 MIN WALL THK	PLEASE SEE SKETCH FOR
	0.375	REFACS.

REMARKS:

ROUTING SHEET IDENTIFIED WITH NCR NO. AND DATE OF ISSUE: BY [signature] DATE: 6-13-97

ORIGINATOR/INSPECTOR: [signature] DATE: 6-13-97

RESPONSIBILITY FOR NONCONFORMANCE

☐ VENDOR ☐ DESIGN ☐ MATERIAL ☐ CUTTING ☐ FORMING ☐ WELDING
☐ MACHINING ☐ INSPECTION ☐ CALIBRATION ☐ QC ☐ QA ☒ OTHER _____

TECHNICAL JUSTIFICATION/DESCRIPTION OF DISPOSITION

ITEM	TECHNICAL JUSTIFICATION	DESCRIPTION OF DISPOSITION
1	SUBMIT TO PSI FOR TECH	USE-AS-IS. SEE ATTACHED REPORT.
	JUSTIFICATION & WRITTEN DISPOSITION.	
	[signature] 6.17.97	

TECHNICAL JUSTIFICATION: BY [signature] DATE: 6/20/97

DISPOSITION: BY [signature] DATE: 6/20/97

DISPOSITION OF NONCONFORMANCE:	RECOMMENDED DISPOSITION:	10CFR21 EVALUATION REQUIRED: ☐ YES ☒ NO
☐ ACCEPT AS IS ☒ USE AS IS	☒ ACCEPTED	CORRECTIVE ACTION REQUIRED: ☐ YES ☒ NO
☐ REPAIR /REWORK ☐ REJECT	☐ NOT ACCEPTED	CUSTOMER APPROVAL REQUIRED: ☒ YES ☐ NO
CONDITIONAL RELEASE: CR NO. _____		APPROVED BY: [signature] DATE 6.13.97

APPROVAL OF DISPOSITION:		VERIFICATION OF DISPOSITION:	
VP-ENGINEERING _____	DATE _____	ACCEPTED BY [signature]	DATE 6/20/97
QA MANAGER [signature]	DATE 6/20/97	QA MANAGER [signature]	DATE 6/20/97
ANI _____	DATE _____	ANI _____	DATE _____

(1)

RANOR, INC

NONCONFORMANCE REPORT

FORM QA 12.1 REV. 6 (07/30/96)

NCR NUMBER: NCR- 1058 | PAGE 1 OF 3 | SKETCH ATTACHED ☒

JOB NUMBER	CUSTOMER	PURCHASE ORDER NUMBER	QUANTITY
7300 Plus	P.S.I.	555822-00	1

PART DESCRIPTION	DOCUMENT NUMBER AND REVISION	SERIAL NUMBER
BSC SHELL	V049-4-003 REV-3	003-09

CODE/SPECIFICATION: ☐ ASME SECTION III ☐ SAFETY RELATED ☐ ASME SECTION VIII ☐ MIL SPEC ☒ COMMERCIAL

DESCRIPTION OF NONCONFORMANCE

ITEM	REQUIREMENT	NONCONFORMANCE
1	NOTE: 11 MIN WALL THK	PLEASE SEE SKETCH FOR
	0.375	DETAILS.

REMARKS: _____

ROUTING SHEET IDENTIFIED WITH NCR NO AND DATE OF ISSUE: BY _____ DATE: 6-13-97

ORIGINATOR/INSPECTOR: _____ DATE: 6-13-97

RESPONSIBILITY FOR NONCONFORMANCE

☐ VENDOR ☐ DESIGN ☐ MATERIAL ☐ CUTTING ☐ FORMING ☐ WELDING
☐ MACHINING ☐ INSPECTION ☐ CALIBRATION ☐ QC ☐ QA ☒ OTHER _____

TECHNICAL JUSTIFICATION/DESCRIPTION OF DISPOSITION

ITEM	TECHNICAL JUSTIFICATION	DESCRIPTION OF DISPOSITION
1	SUBMIT TO PSI FOR TECH	USE AS IS. REDUCED
	JUSTIFICATION WITH TSA DISPOSITION.	THICKNESS DOES NOT IMPAIR
	6-13-97	STRUCTURAL INTEGRITY

TECHNICAL JUSTIFICATION BY R. J. Curtis DATE: 6/13/97

DISPOSITION BY _____ DATE: 6/20/97

DISPOSITION OF NONCONFORMANCE:	RECOMMENDED DISPOSITION:	10CFR21 EVALUATION REQUIRED: ☐ YES ☒ NO
☐ ACCEPT AS IS ☒ USE AS IS	☐ ACCEPTED	CORRECTIVE ACTION REQUIRED: ☐ YES ☒ NO
☐ REPAIR/REWORK ☐ REJECT	☐ NOT ACCEPTED	CUSTOMER APPROVAL REQUIRED: ☒ YES ☐ NO
CONDITIONAL RELEASE: CR NO. _____		APPROVED BY: _____ DATE 6.13.97

APPROVAL OF DISPOSITION:		VERIFICATION OF DISPOSITION:	
VP-ENGINEERING	DATE	ACCEPTED BY	DATE
QA MANAGER	DATE	QA MANAGER	DATE
ANI	DATE	ANI	DATE

(2)

NCR# 1058 2/3

DEGREE 0°

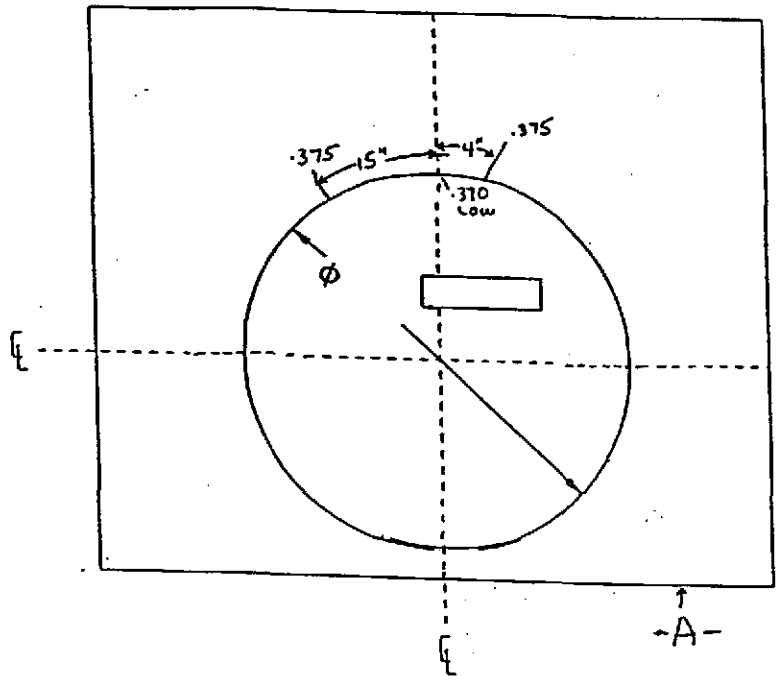

DEGREE 90°

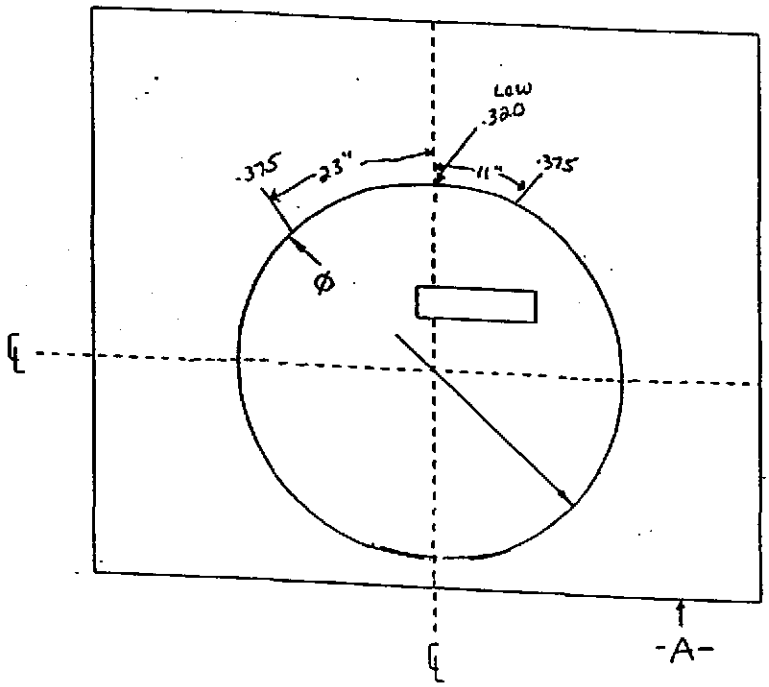

3d3

NCR# 1058

DEGREE 180°

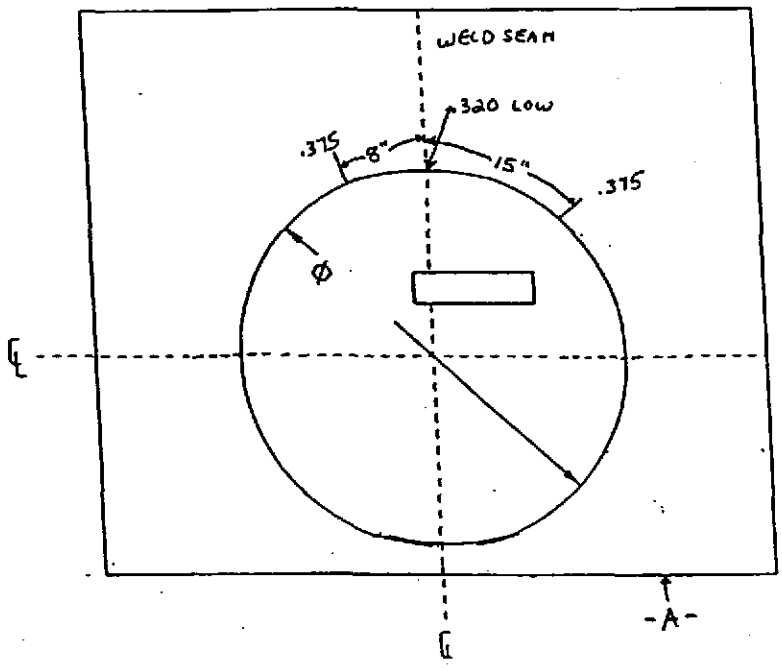

DEGREE 270°

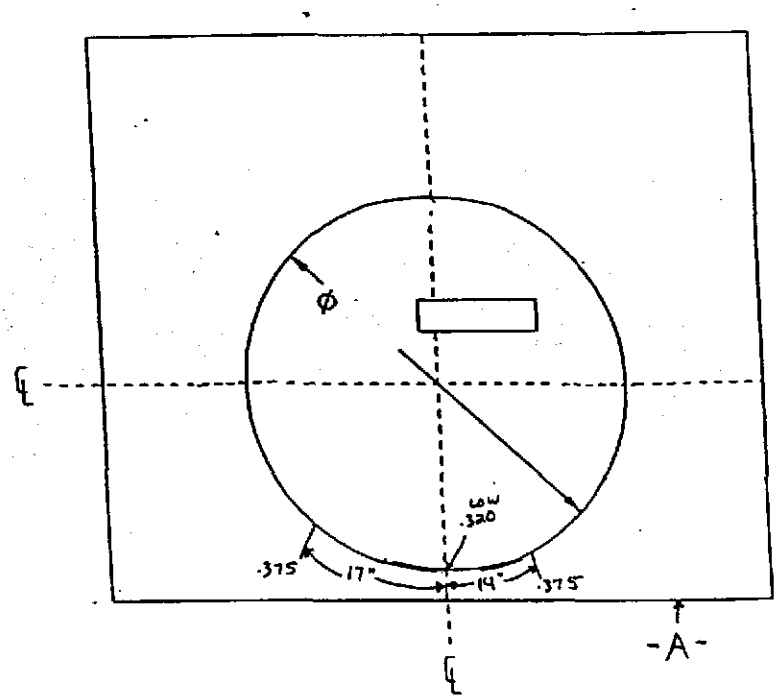

RANOR, INC

NONCONFORMANCE REPORT

FORM QA 12.1 REV. 6 (07/30/96)

NCR NUMBER	PAGE / OF 3
NCR- 1063	SKETCH ATTACHED ☒

JOB NUMBER	CUSTOMER	PURCHASE ORDER NUMBER	QUANTITY
7300 FM	P.S.I.	555822-00	1

PART DESCRIPTION	DOCUMENT NUMBER AND REVISION	SERIAL NUMBER
BSC SHELL	V049-4-003 REV-3	003-09

CODE/SPECIFICATION: ☐ ASME SECTION III ☐ SAFETY RELATED ☐ ASME SECTION VIII ☐ MIL SPEC ☒ COMMERCIAL

DESCRIPTION OF NONCONFORMANCE

ITEM	REQUIREMENT	NONCONFORMANCE
1 *	48.44 ± .045 ZONE B-8	48.383 +-.012 48.393 -.002 48.418 90° R.S, 48.415 270° R.S.
2	96.875 ± .10 ZONE B-8	96.765 MIN -.010 270°
3	⊥ | .030 | A | ZONE B-5	0.043 +.013
4	⊥ | .030 | B | ZONE D-7	0.033 +003
*	ITEM #1 CONTINUED →	48.372 48.396 -.023 270°

REMARKS: PLEASE REFERENCE WORK SHEETS FOR ACTUAL DETAIL LOCATIONS *

23 SB 4/23/97

ROUTING SHEET IDENTIFIED WITH NCR NO. AND DATE OF ISSUE: BY _____ DATE: 6-24-97

ORIGINATOR/INSPECTOR: _____ DATE: 6-24-97 (23) SB 4/23/97

RESPONSIBILITY FOR NONCONFORMANCE

☐ VENDOR ☒ MACHINING ☐ DESIGN ☐ INSPECTION ☐ MATERIAL ☐ CALIBRATION ☐ CUTTING ☐ QC ☐ FORMING ☐ QA ☒ WELDING ☒ OTHER _____

TECHNICAL JUSTIFICATION/DESCRIPTION OF DISPOSITION

ITEM	TECHNICAL JUSTIFICATION	DESCRIPTION OF DISPOSITION
	Submit to PSI for tech. justification & written disposition. 6.23.97	Use-as-is. See attached report.

TECHNICAL JUSTIFICATION: BY _____ DATE: 6/23/97

DISPOSITION: BY _____ DATE: 6/23/97

DISPOSITION OF NONCONFORMANCE	RECOMMENDED DISPOSITION	
☐ ACCEPT AS IS ☒ USE AS IS ☐ REPAIR /REWORK ☐ REJECT CONDITIONAL RELEASE: CR NO. _____	☒ ACCEPTED ☐ NOT ACCEPTED	10CFR21 EVALUATION REQUIRED: ☐ YES ☒ NO CORRECTIVE ACTION REQUIRED: ☐ YES ☒ NO CUSTOMER APPROVAL REQUIRED: ☒ YES ☐ NO APPROVED BY: _____ DATE 6-23-97

APPROVAL OF DISPOSITION:		VERIFICATION OF DISPOSITION:	
VP-ENGINEERING _____	DATE _____	ACCEPTED BY _____	DATE 6/23/97
QA MANAGER _____	DATE 6/23/97	QA MANAGER _____	DATE 6/23/97
ANI _____	DATE _____	ANI _____	DATE _____

-B-

L-20-97

PSI DRAWING # V049-4-003 REV 1
V049-4-101 REV 3

DATE OF INSPECTION 6-20-97
WITNESS (PSI) GS

SERIAL #V0494003-09
RANOR JOB # 7300Pm

SHIFTED PLUS .02 f/ original

DEGREE 0° (MACHINE ORIENTATION)
DEGREE ∅ (DRAWING ORIENTATION)

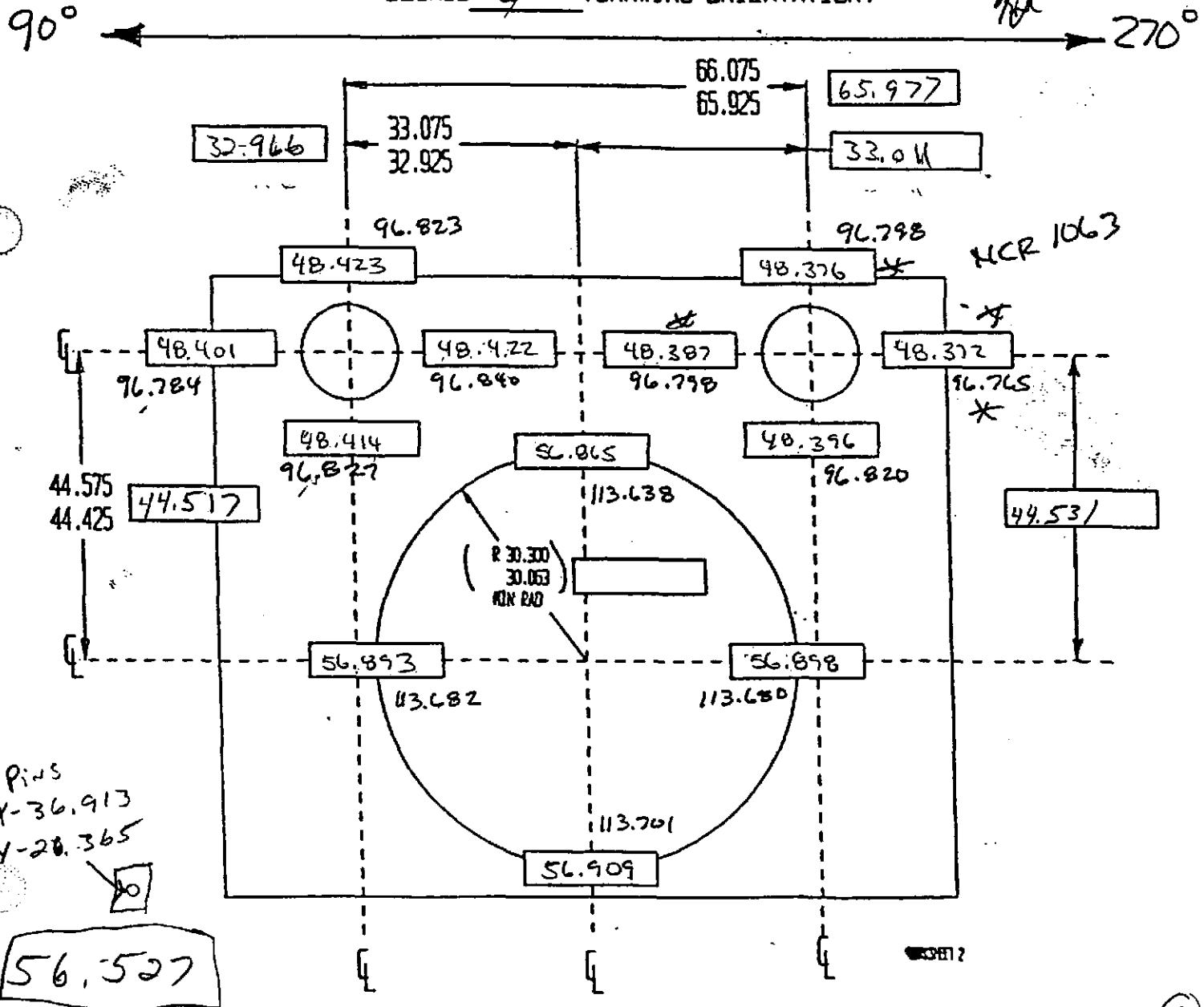

6-20-97

PSI DRAWING # V049-4-003 REV 1
V049-4-101 REV 3
SERIAL #V0494003-09
RANOR JOB # 7300FM

DATE OF INSPECTION 6-20-97
WITNESS (PSI) GS

SHIFTED -02 F/ OTIONAL NOZ

DEGREE 180° (MACHINE ORIENTATION)
DEGREE -180 (DRAWING ORIENTATION)

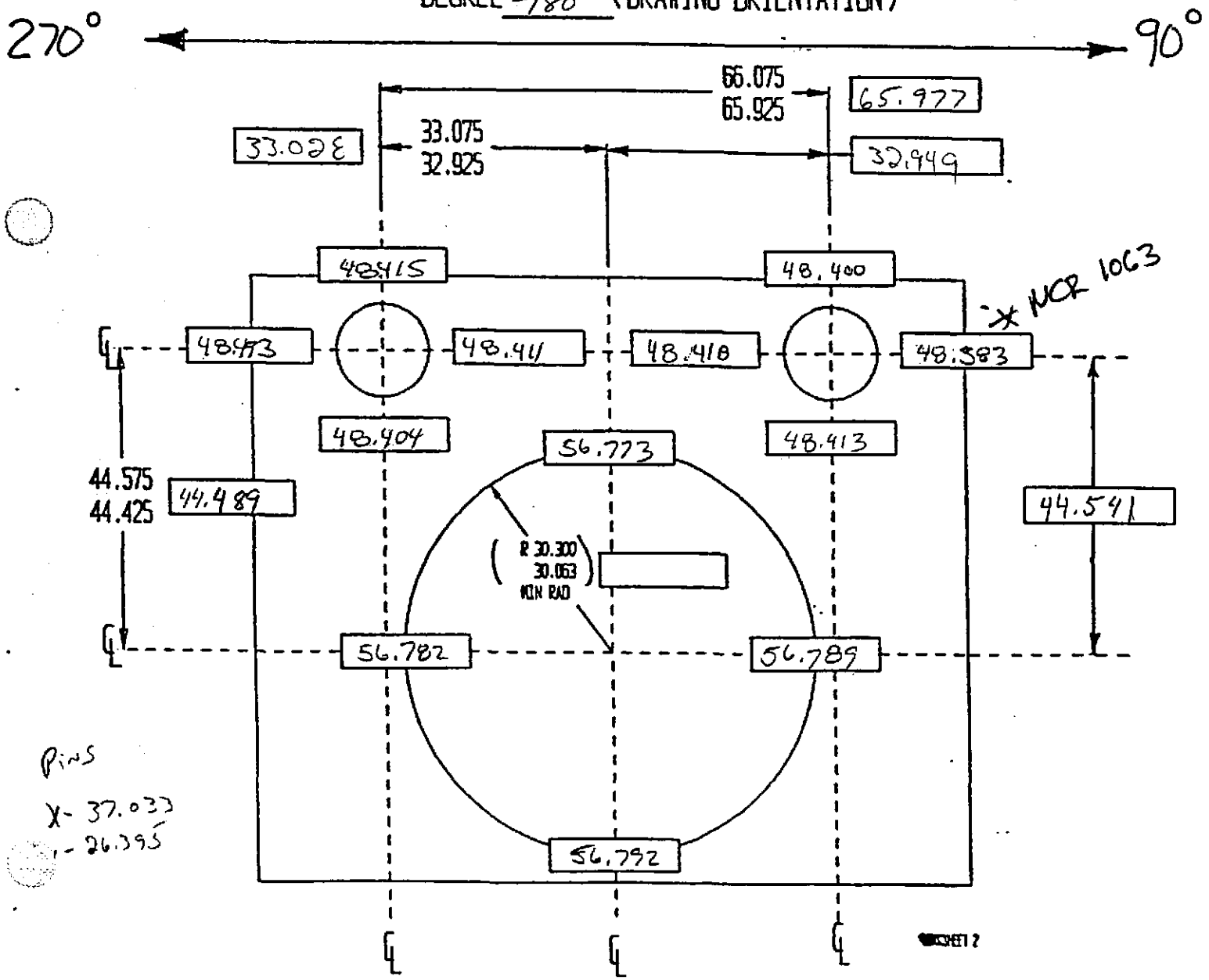

NCR 1063

Pins
X- 37.033
Y- 26.395

RANOR, INC

3.45.4-46

NONCONFORMANCE REPORT

FORM QA 12.1 REV. 6 (07/30/96)

NCR NUMBER NCR. 1063 | PAGE 1 OF 3 | SKETCH ATTACHED ☒

JOB NUMBER	CUSTOMER	PURCHASE ORDER NUMBER	QUANTITY
7300 PM	P.S.I.	555822-00	1

PART DESCRIPTION	DOCUMENT NUMBER AND REVISION	SERIAL NUMBER
BSC SHELL	V049-4-003 REV-3	003-09

CODE/SPECIFICATION: ☐ ASME SECTION III ☐ SAFETY RELATED ☐ ASME SECTION VIII ☐ MIL SPEC ☒ COMMERCIAL

DESCRIPTION OF NONCONFORMANCE

ITEM	REQUIREMENT	NONCONFORMANCE
1 *	48.44 ±.045 ZONE B-8	48.383 -.013 48.393 -.002 48.418 90° RS, 48.415 270° RS
2	96.875 ± .10 ZONE B-8	96.765 MW -.010 270°
3	⊥ | .030 | A | ZONE B-5	0.043 +.013
4	⊥ | .030 | B | ZONE D-7	0.033 +.03
*	ITEM #1 CONTINUED	48.372 48.396 -.023 270°

REMARKS: PLEASE REFERENCE WORK SHEETS FOR ACTUAL DETAIL LOCATIONS *

ROUTING SHEET IDENTIFIED WITH NCR NO. AND DATE OF ISSUE: BY _____ DATE: 6-23-97

ORIGINATOR/INSPECTOR: _____ DATE: 6-23-97

RESPONSIBILITY FOR NONCONFORMANCE

☐ VENDOR ☒ MACHINING ☐ DESIGN ☐ INSPECTION ☐ MATERIAL ☐ CALIBRATION ☐ CUTTING ☐ QC ☐ FORMING ☐ QA ☒ WELDING ☒ OTHER _____

TECHNICAL JUSTIFICATION/DESCRIPTION OF DISPOSITION

ITEM	TECHNICAL JUSTIFICATION	DESCRIPTION OF DISPOSITION
	Submit to PSI for tech. justification	Part is acceptable. Use
	& written disposition	as is.
	6-23-97	6-23-97

TECHNICAL JUSTIFICATION: BY _____ DATE 6-23-97

DISPOSITION: BY _____ DATE 6/23/97

DISPOSITION OF NONCONFORMANCE:	RECOMMENDED DISPOSITION:	10CFR21 EVALUATION REQUIRED: ☐ YES ☒ NO
☐ ACCEPT AS IS ☐ USE AS IS ☐ REPAIR /REWORK ☐ REJECT	☐ ACCEPTED ☐ NOT ACCEPTED	CORRECTIVE ACTION REQUIRED: ☐ YES ☐ NO
CONDITIONAL RELEASE: CR NO. _____		CUSTOMER APPROVAL REQUIRED: ☒ YES ☐ NO
		APPROVED BY: _____ DATE 6-23-97

APPROVAL OF DISPOSITION:		VERIFICATION OF DISPOSITION:	
VP-ENGINEERING	DATE	ACCEPTED BY	DATE
QA MANAGER	DATE	QA MANAGER	DATE
ANI	DATE	ANI	DATE

8

S/N V0494003-9

NCR# 1063

INSP [signature] 6-20-97 Date

BSC
INSPECTION LOG

Sect "A-A"		Dimension	Actual @ 0	Actual @ 90	Actual @ 180	Actual @ 270	Tolerance	
1	Face to Face "D"	96.875"		96.784 MIN		96.765 MIN	.1"	-.010 *
2				96.840 MAX		96.820 MAX		
3	Perpendicular to "A"	0.032	L /R0.004				.075"	
4	Perpendicular to "C"	0.049	L /R0.044				.075"	
5	Parrallel to "B"	0.026	L /R0.017				.075"	
6	Center 60" to Face "D"	~~48.437~~	R.S.	48.383-48.418	R.S.	48.393-48.415	.045"	-.012, -.002 *
	[signature] 6-20-97	48.44	L.S.	48.401-48.423	L.S.	48.372-48.396		-.023 *
7	Perpendicular to "A"			0.035	L /R0.011		.075"	
8	Perpendicular to "C"			0.011	L /R0.064		.075"	
9	Parrallel to "B"			0.023	L /R0.040		.075"	
10	Center to Center "D"	66"	65.977	—	65.977	—		
11	Parrallel to "A"	0.066					.075"	
12	Perpendicular to "B"	0.061					.075"	
13	Parrallel to "C"	0.012					.075"	
14	Center 60" to Center "D"	33"	32.966	TOP	32.949	TOP		
			33.011	BOTTOM	33.028	BOTTOM		
15	Parrallel to "A"	0.066					.075"	
16	Perpendicular to "B"	0.019					.075"	
17	Parrallel to "C"	0.012					.075"	

(8)

S/N V0494003-9

BSC
INSPECTION LOG

INSP [signature] 6-20-97 Date

Elevation		Dimension	Actual @ 0	Actual @ 90	Actual @ 180	Actual @ 270	
View 18	Center 60" to Center "D"	44.50"	44.531	RS	44.541	RS.	
	Diff. of "B" & "B"	0.015	44.517	L.S.	44.489	L.S.	
	Diff. of "C" & "C"	0.015					
	Total Differance	0.030					.075"
19	B's Parrallel to "A"	0.009					.030"
20	C's Parrallel to "A"	0.018					.030"
21	5/8 Port 48 Deg to Rt.		> —		> —		
22	5/8 Port 48 Deg to Lf.			> —		> —	
Plan							
View 23	Face to Face 60"	113-3/4"	113.683				
			113.701				
	"B" Nozzles	Actual ↓	>		>		.1"
24	Parrallel to"B"	= 0.002	>		>		.030"
25	Perpendicular to "A"	= 0.043	>		>		.030"
26	Perpendicular to "C"	= 0.022	>	>	>	>	.030"
27	56-7/8" Left & Right		56.865 MIN		56.773 MIN		.1"
			56.909 MAX		56.792 MAX		.1"
28	Face to Face 60"	113-3/4"	113.663				
	"C" Nozzles	Actuals ↓	113.713	>		>	.1"
29	Parrallel to"C"	= 0.001		>		>	.030"
30	Perpendicular to "A"	= 0.008		>		>	.030"
31	Perpendicular to "B"	= 0.033	>	>	>	>	.030"
32	56-7/8" Left & Right			56.803 MIN		56.852 MIN	.1"
				56.844 MAX		56.881 MAX	.1"

+.013 ✗

+.003 ✗

(10)

S/N V0494003-9

BSC
INSPECTION LOG

INSP _____ 6-20-97 Date

Annulus Port on 104.5" flange is @ 135 & 315 Deg							
Drawing V0494003							
	Support Leg Lug Dim.						
		26.48"	26.37	26.37	26.39	26.25	
		Dimension	Actual @ 0	Actual @ 90	Actual @ 180	Actual @ 270	
		60.5" Dia.	> 60.500	> 60.500	> 60.540	> 60.47	
			60.52	60.53	60.555	60.54	
		104.5" Dia.	> 104.490	> 104.416	> 45° = 104.520	> 315° = 104.407	
	RAD	30.300 30.063	30.210 30.310	30.230 30.250	30.255 30.290	30.210 30.310	

-B-

L-20-97

PSI DRAWING # V049-4-003 REV 1
V049-4-101 REV 3

DATE OF INSPECTION 6-20-97
WITNESS (PSI) GS

SERIAL #V0494003- 09
RANOR JOB # 7300Fm

DEGREE 0° (MACHINE ORIENTATION)
DEGREE ∅ (DRAWING ORIENTATION)

SHIFTED PLUS .02 F/ original

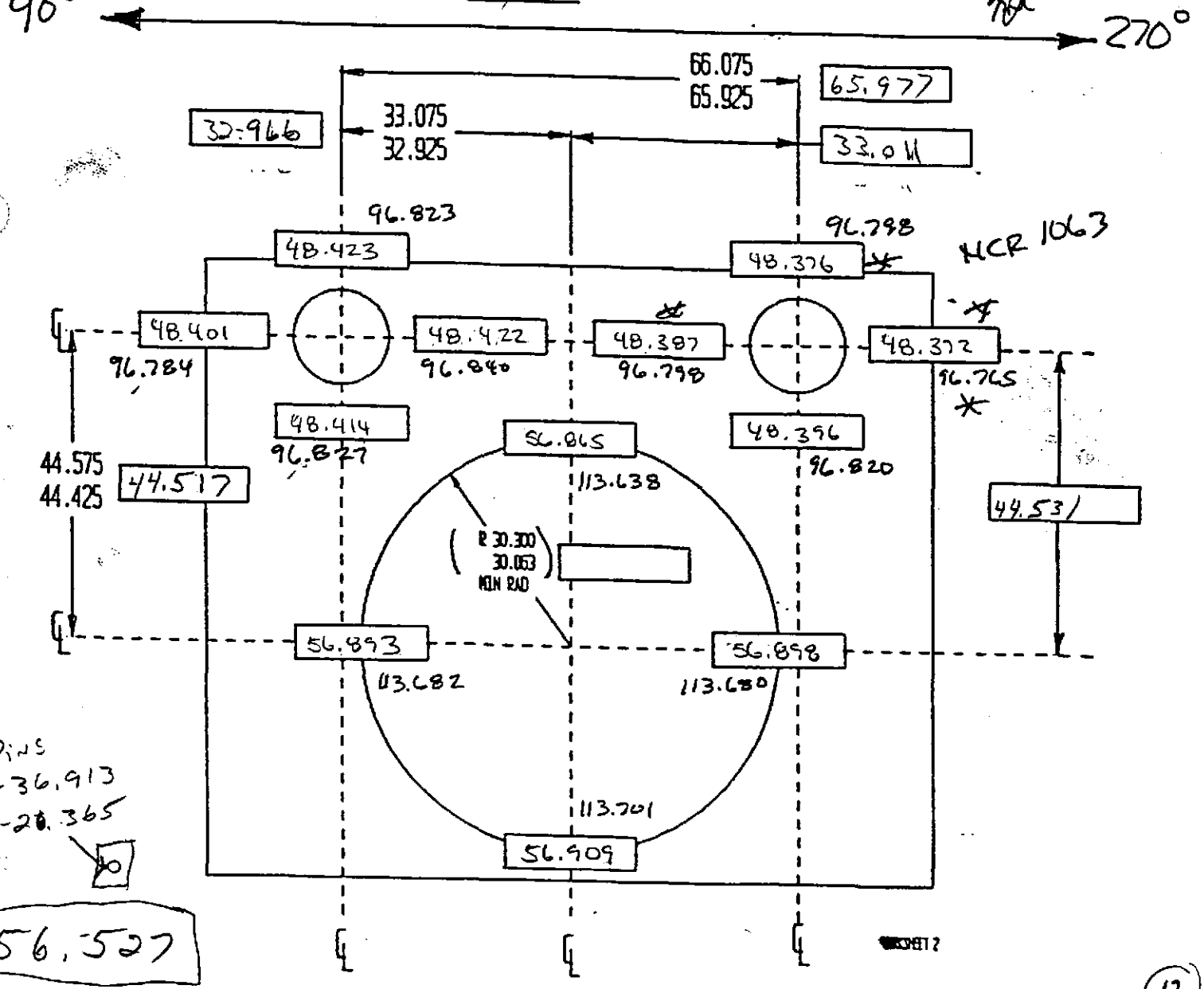

L 2097

PSI DRAWING # V049-4-003 REV 1
V049-4-101 REV 3

DATE OF INSPECTION 6-20-97
WITNESS (PSI) GS

SERIAL #V0494003-09
RANOR JOB # 7300PM

SHIFTED -02 F/ ORIGINAL AXIS

DEGREE 180° (MACHINE ORIENTATION)
DEGREE -180 (DRAWING ORIENTATION)

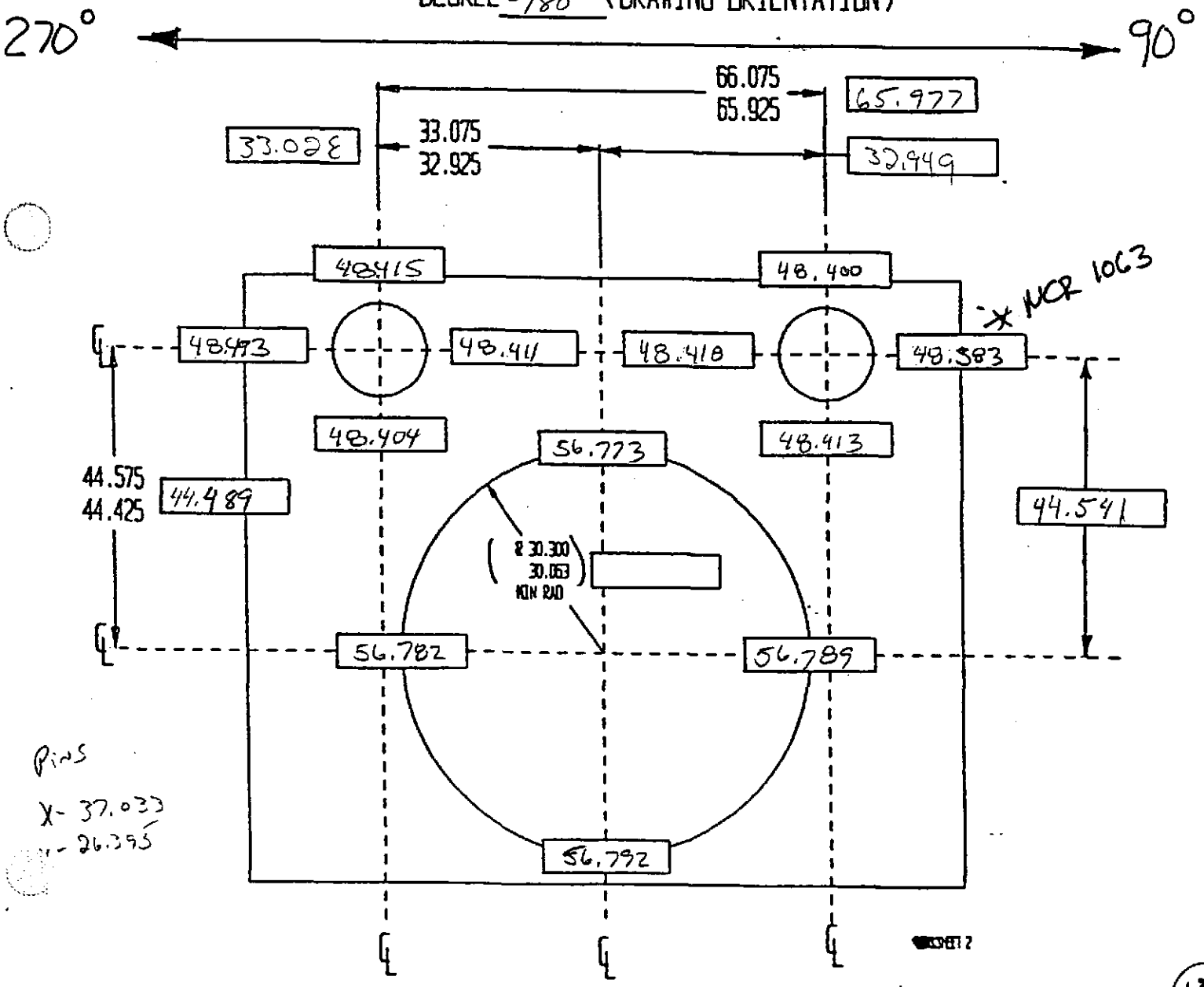

Pins

X- 37.033

Y- 26.395

L3

FACE LOCATIONS= [ ]

(Ø) RADIUS SWEEP F/ ℄ = ( )

PSI DRAWING # V049-4-003 REV 1
V049-4-101 REV 3

SERIAL #V0494003-09
RANOR JOB #7300FM

DATE OF INSPECTION 6-20-97
WITNESS (PSI) GS

DEGREE -90 (MACHINE ORIENTATION)
DEGREE 90° (DRAWING ORIENTATION)

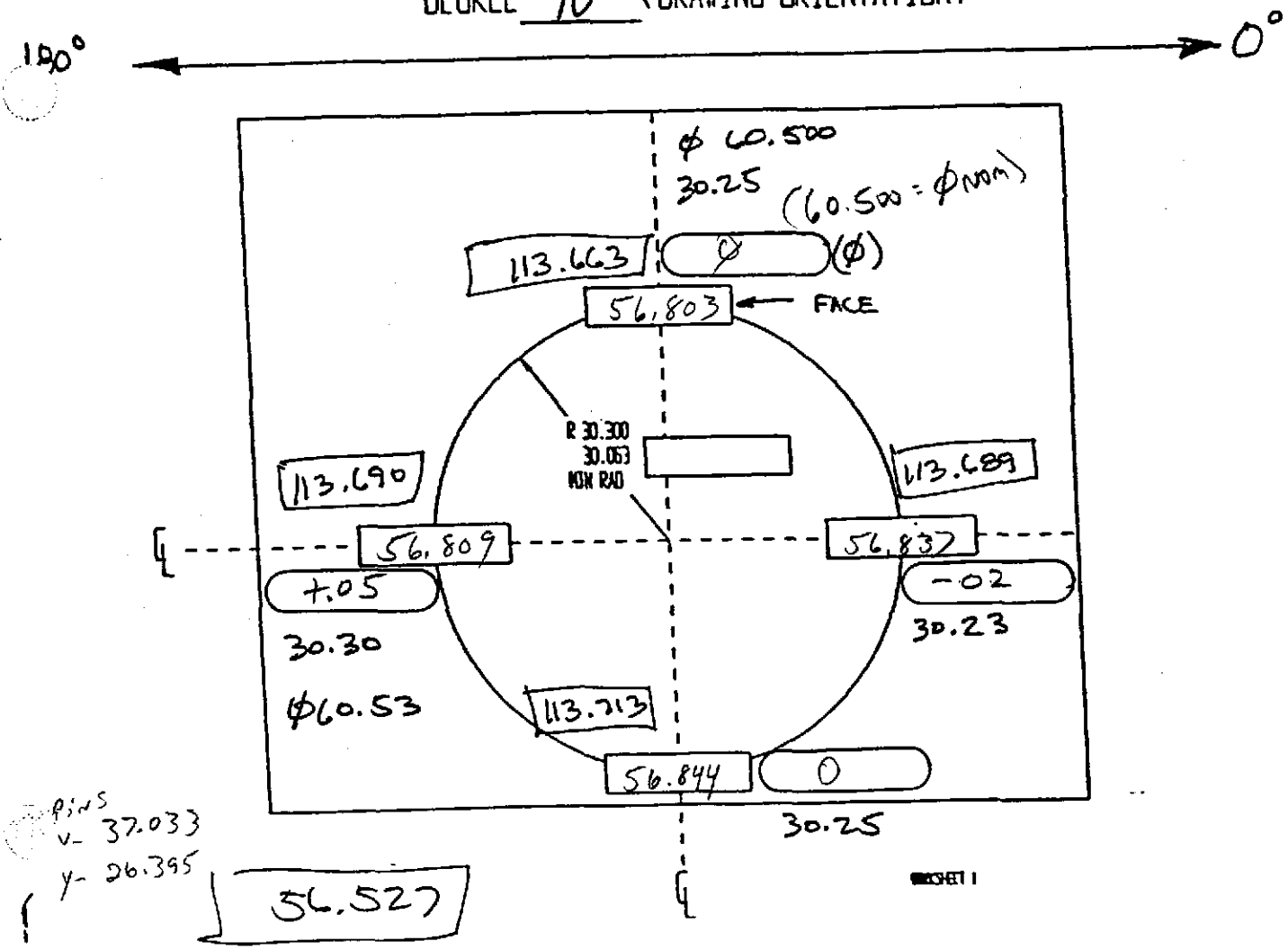

pins
x- 37.033
y- 26.395

56.527

FACE LOCATIONS= [ ]

(Ø) RADIUS SWEEP F/ ℄ = ( )

-C-

6-20-97

PSI DRAWING # V049-4-003 REV 1
V049-4-101 REV 3

DATE OF INSPECTION 6-20-97
WITNESS (PSI) CJ

SERIAL #V0494003- 09
RANDR JOB # 7300FN

DEGREE -270 (MACHINE ORIENTATION)
DEGREE 270° (DRAWING ORIENTATION)

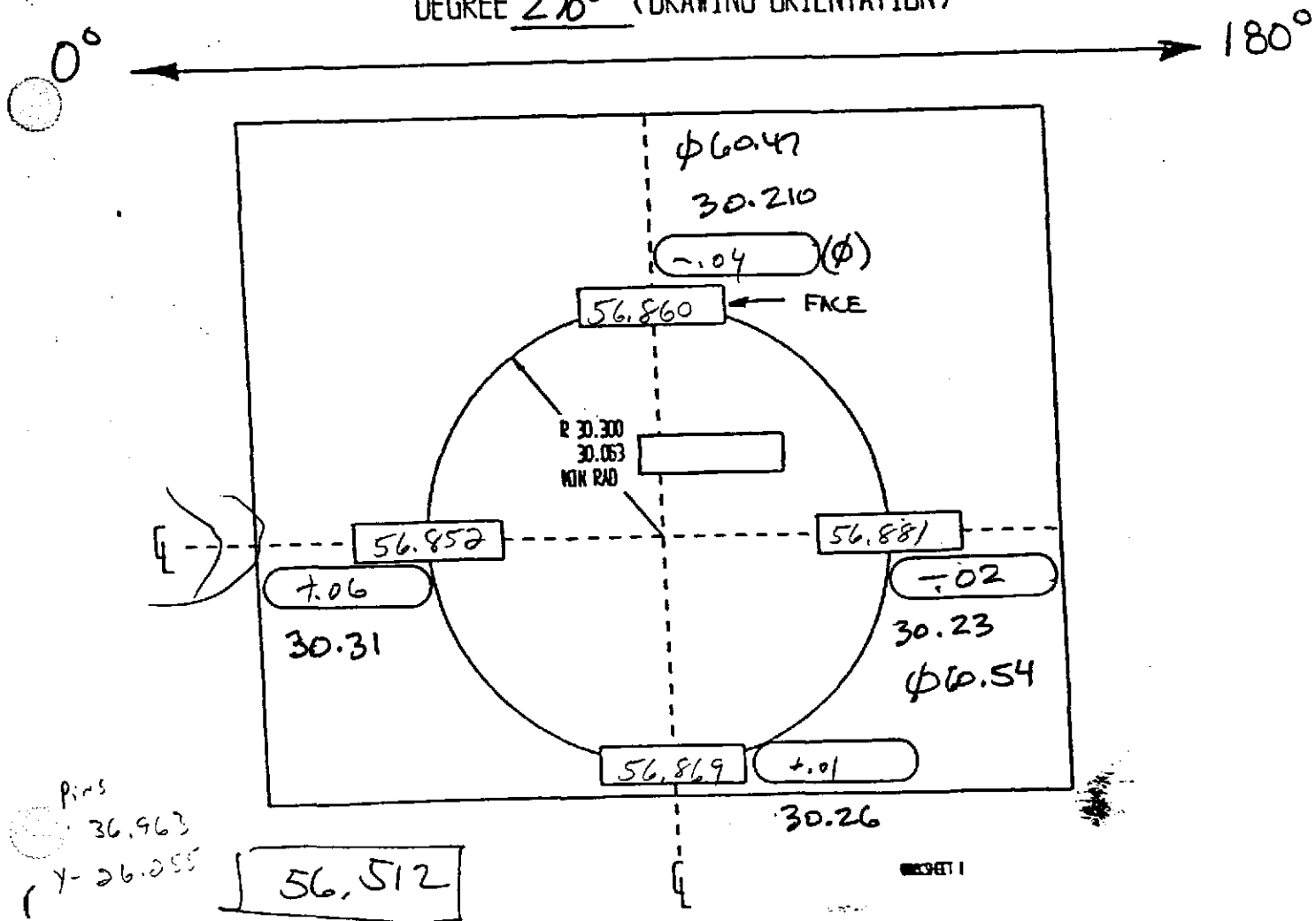

Pins
X- 36.963
Y- 26.055

56,512

(1E)

FACE LOCATIONS= [ ]

(Ø) RADIUS SWEEP F/ ℄ = [ ]

PSI DRAWING # V049-4-003 REV 1
V049-4-101 REV 3

DATE OF INSPECTION 6-20-97

WITNESS (PSI) _____

SERIAL #V0494003- 09

RANOR JOB # 7300 FM

DEGREE _____ (MACHINE ORIENTATION)

DEGREE 0° (DRAWING ORIENTATION)

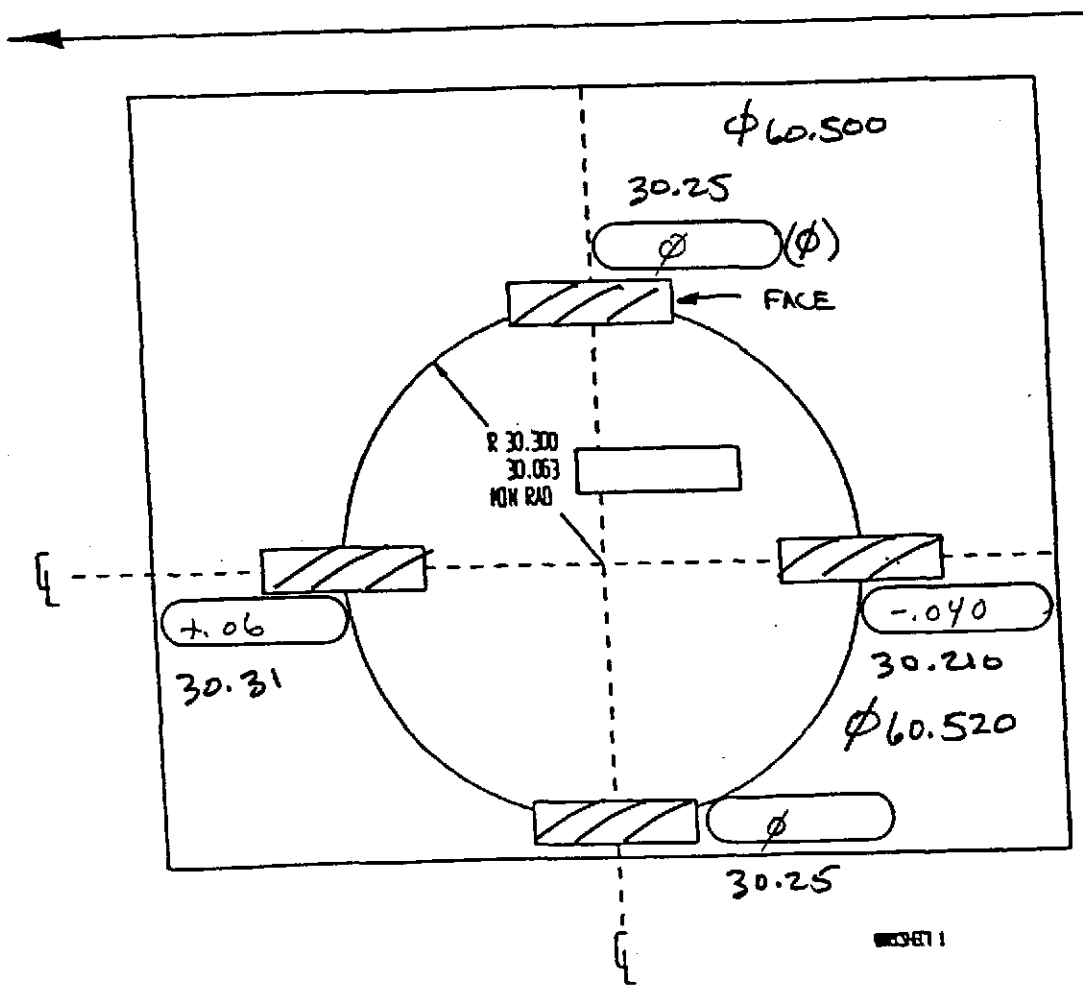

FACE LOCATIONS= [ ]

(Ø) RADIUS SWEEP F/ ℄ = [ ]

PSI DRAWING # V049-4-003 REV 1
V049-4-101 REV 3

DATE OF INSPECTION 6-20-97
WITNESS (PSI) _____

SERIAL #V0494003-09
RANOR JOB # 7300FM

DEGREE _____ (MACHINE ORIENTATION)
DEGREE 180° (DRAWING ORIENTATION)

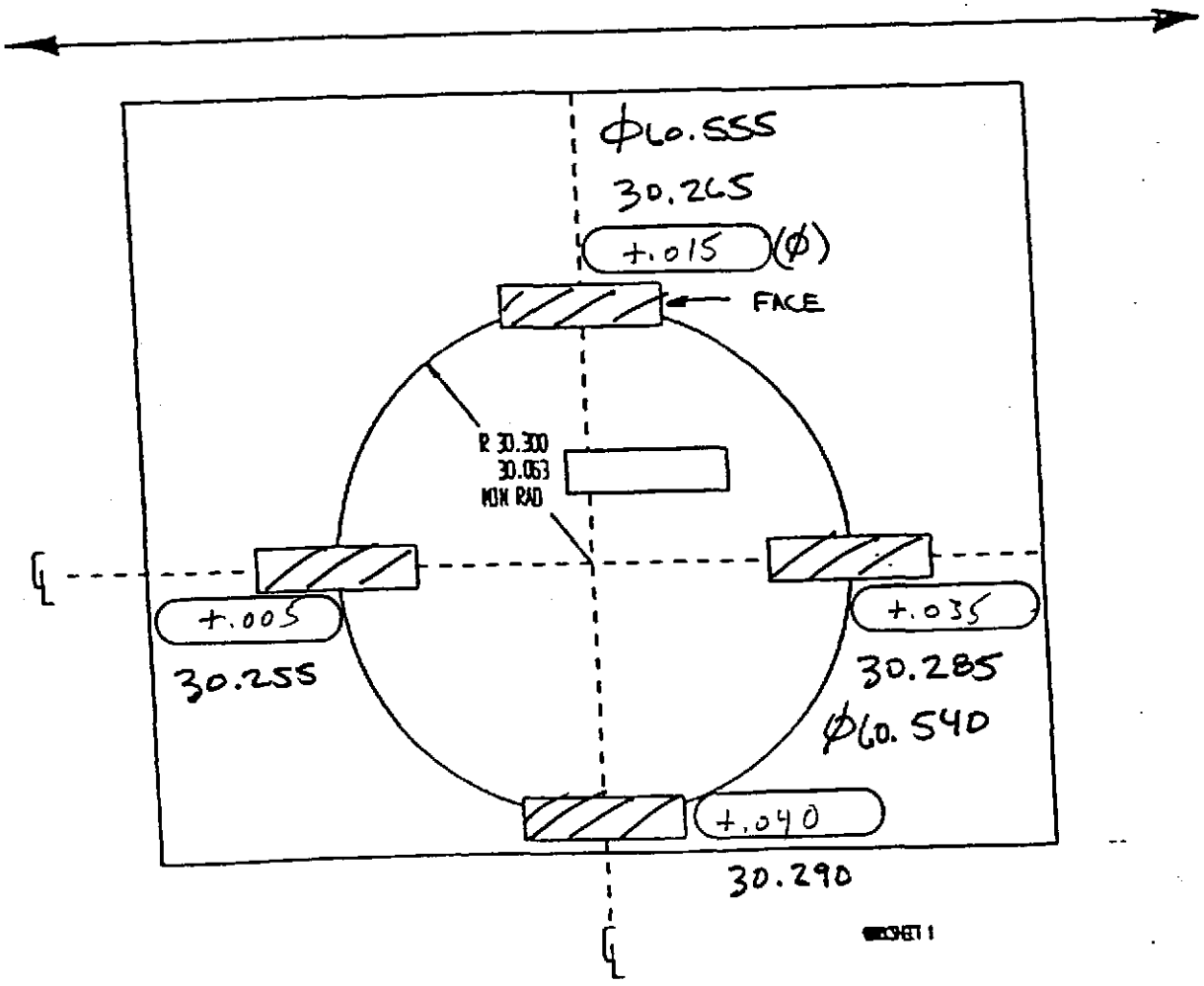

(6)

FLATNESS CHECK

PSI DRAWING # V049-4-003 REV 1
V049-4-101 REV 3
SERIAL #V0494003- 09
RANDR JOB # 7300PM

DATE OF INSPECTION 6-20-17
WITNESS (PSI) GS

DEGREE Ø (MACHINE ORIENTATION)
DEGREE 0 (DRAWING ORIENTATION)

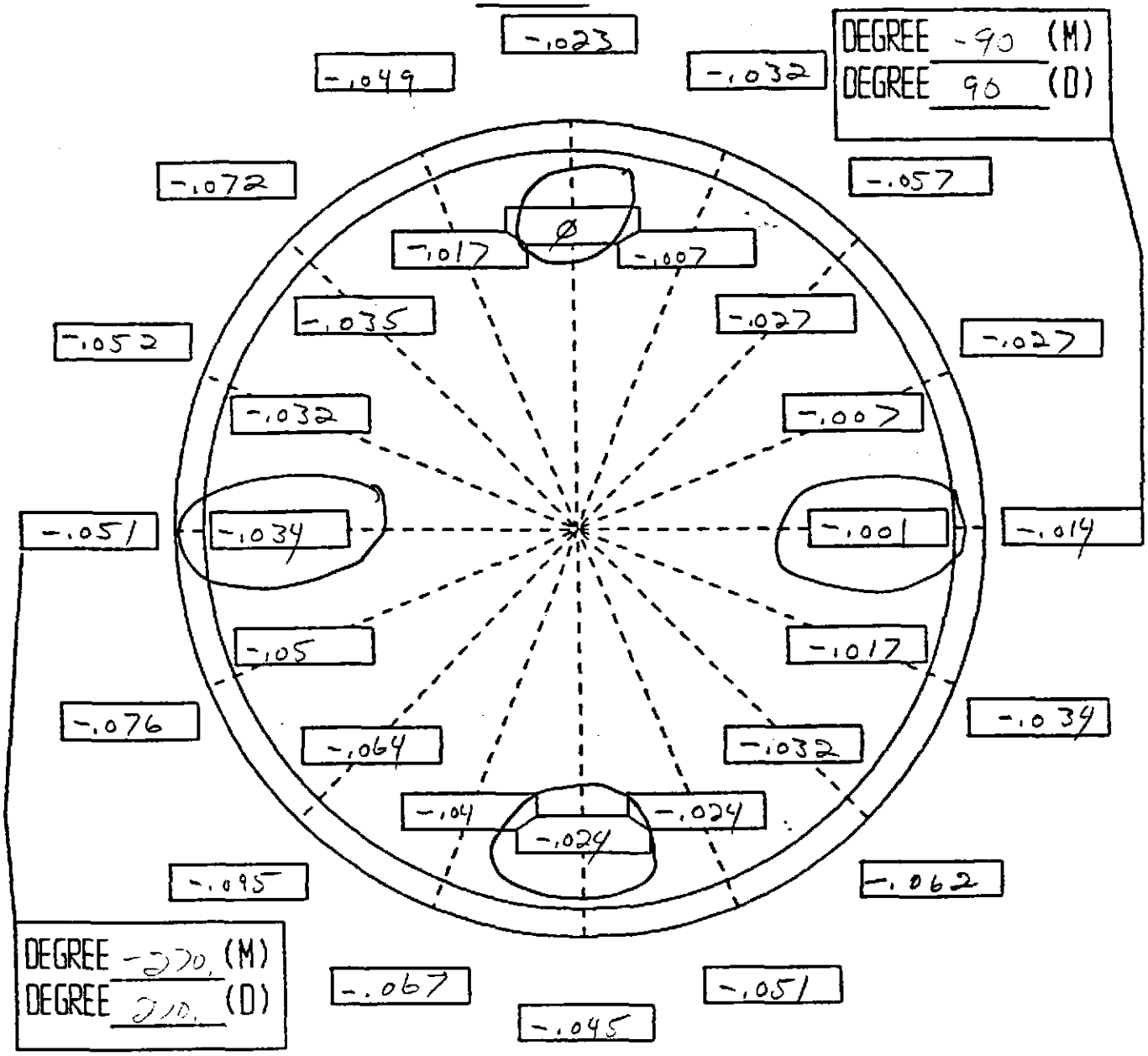

DEGREE -180 (MACHINE ORIENTATION)
DEGREE 180 (DRAWING ORIENTATION)

INNER DIMENSIONS FROM THIS AREA

OUTER DIMENSIONS FROM THIS AREA

T.I.R. & DIA CHECH
I.D. of RING.

6-20-97

PSI DRAWING # V049-4-003 REV 1
V049-4-101 REV 3

DATE OF INSPECTION 6-20-97
WITNESS (PSI) GS

SERIAL #V0494003-09
RANOR JOB # 7300PR

DEGREE ∅ (MACHINE ORIENTATION)
DEGREE 0 (DRAWING ORIENTATION)

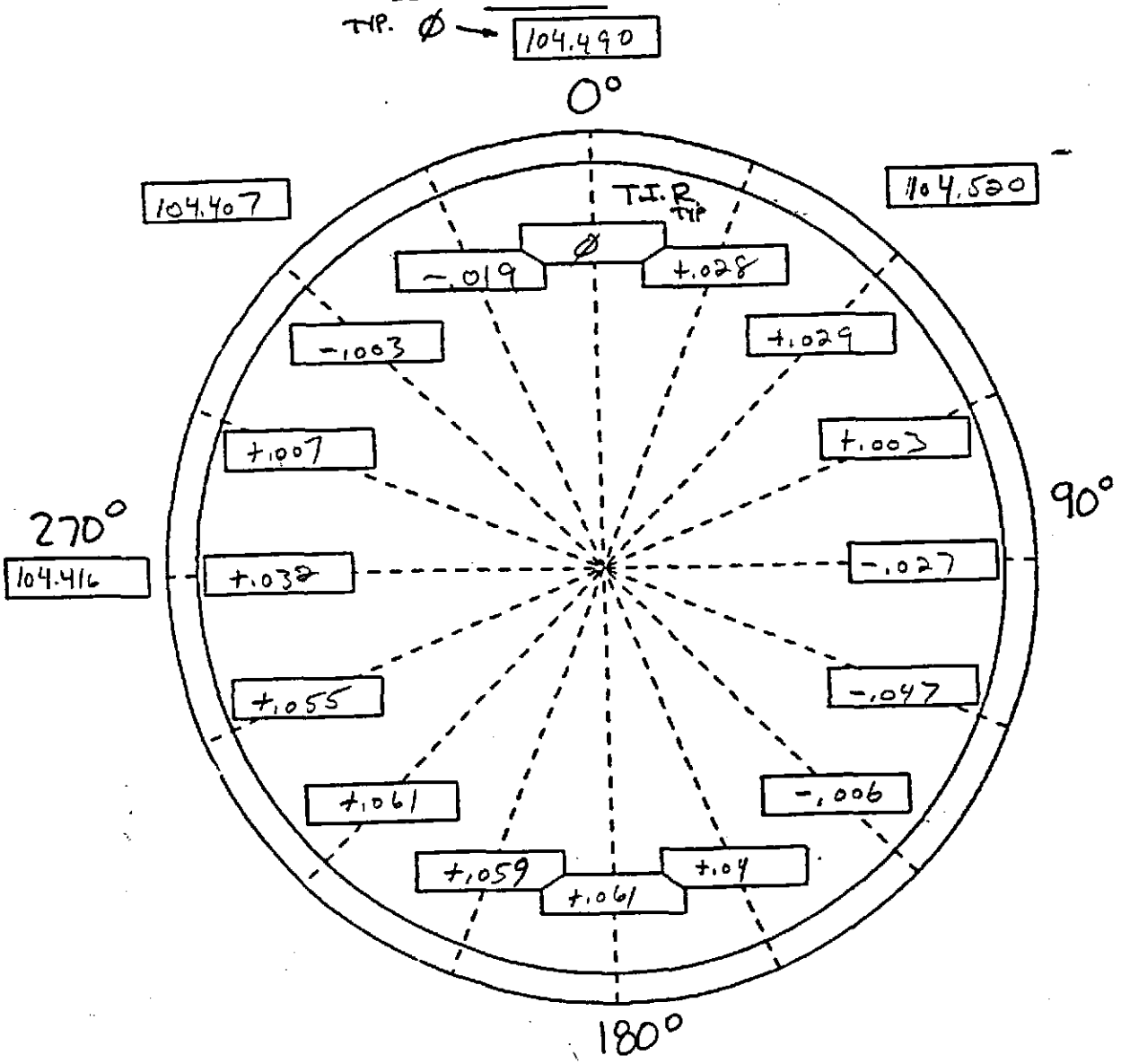

DEGREE -180 (MACHINE ORIENTATION)
DEGREE 180 (DRAWING ORIENTATION)

RANOR, INC 0° ORIENTATION G-2

DIMENSIONAL INSPECTION REPORT UNIT #9
FORM QA 9.1 REV. 2 (4/1/96)

Customer: PROCESS SYSTEMS INTER	Level No.: 1C	Report No.: N/A
Part Description: 60½" I.D. FLANGE (BSC) GROOVED	P.O. No. 555822-00	S.O. No. 7300 F/M
Drawing No. & Rev. V049-4-019 REV-4	Serial No. 7300-36	Sheet 1 con't 2 Rev.: —

Item No.	Drawing Dimension and Tolerances	Drawing Zone	Actual Dimension	Instrument Serial No.	Ref. / NCR Information	Sign Off
1	1.38 +.13 −.00	B-1	1.439 1.445	DVI2QC		KJC 6/8/97 RANOR 6/6/97
2	125	B-1	<125	VISUAL		
3	63	C-1	<63	VISUAL		
4	▱ | .010 |	C-1	W.003	VC-1		
5	1.00	C-3	0.995 1.004	DVI2QC		
6	Ø 60.50 +.03 +.00	B-3	60.482	IM4DI20QC		
7	63	B-3	<63	VISUAL		
8	Ø 61.40 +.03 −.00	B-3	61.412	DM06QC, CAL		
9	0.015 RAD	B-3	0.015	RGBQC		
10	0.06 RAD	C-3	0.06	RGBQC		
11	Ø 62.38	C-3	62.378	DVI2QC, CAL		
12	Ø 63.75	C-3	63.744	DVI2QC, CAL		
13	↧ 0.50	C-2	0.503	DM06QC		
14	0.03 RAD MAX TYP	C-4	0.03	RGBQC		
15	Ø 61.25	C-3	61.242	DVI2QC, CAL		
16	0.335 - 0.340	DETAIL-D B-4	OK TO GAGE	PGS2QC		
17	0.206 - 0.214	↓	0.209	DM06QC		
18	32 ▽C ± 8RMS	↓	23	PSOIQC		
19	Ø 64.25	C-2	64.240	DVI2QC, CAL		
20	0.335 - 0.340	DETAIL-D B-4	OK TO GAGE	PGS2QC		
21	0.206 - 0.214	↓	0.209	DM06QC		
22	32 ▽C ± 8RMS	↓	27	PSOIQC		
23	63	↓	<63	VISUAL		
24	RAD 0.020 0.035 TYP	↓	0.03	RGBQC		
25	75° TYP	↓	75°	VPIQC		↓
26	63 TYP	↓	<63	VISUAL		KJC 6/8/97 RANOR 6/6/97

RANOR, INC

G-2

DIMENSIONAL INSPECTION REPORT

FORM QA 9.1 REV. 2 (4/1/96)

Customer: PROCESS SYSTEM INTER	Level No.: 1C	Report No.: N/A
Part Description: 60 1/2 I.D. FLANGE (BSC) GROOVED	P.O. No. 555822-00	S.O. No. 7300 FM
Drawing No. & Rev. V049-4-019 REV-4	Serial No. 7300-36	Sheet 2 con't Rev.: —

Item No.	Drawing Dimension and Tolerances	Drawing Zone	Actual Dimension	Instrument Serial No.	Ref. / NCR Information	Sign Off
27	BREAK ALL EDGES (.005 R)	C-4	OK	VISUAL		KJC 881 RANOR 6-10-97
28	60° 6X DETAIL C	C-6	60°	DVI2QC		
29	0.25	D-5	0.248	DVI2QC		
30	0.50	D-5	0.496	DVI2QC		
31	BREAK ALL EDGES (.005 R)	D-3	OK	VISUAL		
32	↧ 0.146 - 0.156	C-5	0.148	DMO6QC		
33	↧ 0.080 - 0.156	C-3	0.119	DMO6QC		
34	BREAK ALL EDGES (.005 R)	C-3	OK	VISUAL		
35	Ø 1.00 30X	D-5	1.010	DVI2QC		
36	66.260 B.C.	D-5	66.25	DVI2QC		
37	60°	D-6	60°	DVI2QC		
38	12.0°	D-6	12°	DVI2QC		
39	48°	D-7	48°	DVI2QC		
40	Ø 5/8 THRU	D-2	0.627	DVI2QC		
41	0.76 C'BORE		0.754	DVI2QC		
42	↧ 1/8		1/8	SCALE		
43	31.531 RAD		31.53	DVI2QC		
44	45°		45°	SCALE		
45	1/8"		1/8	SCALE		
46	68.50 O.D. REF	C-2	—	—		
47	SCRIBE & STAMP 0°	B-2	OK	VISUAL		
48	SCRIBE S/N.	—	OK	VISUAL		KJC 881 RANOR 6-10-97

RANOR, INC. 0° ORIENTATION G-2

DIMENSIONAL INSPECTION REPORT
FORM QA 9.1 REV. 2 (4/1/96)

UNIT #9

Customer: PROCESS SYSTEMS INTER	Level No.: 1C	Report No.: N/A
Part Description: 60 1/2" I.D. FLANGE (BSC) GROOVED	P.O. No. 555822-00	S.O. No. 7300 F/m
Drawing No. & Rev. V049-4-019 REV-4	Serial No. 7300-37	Sheet 1 con't 2 Rev.: —

Item No.	Drawing Dimension and Tolerances	Drawing Zone	Actual Dimension	Instrument Serial No.	Ref. / NCR Information	Sign Off
1	1.38 +.13 −.00	B-1	1.443 1.450	DVI2QC		KJC 8611 RANOR 10-97
2	125	B-1	<125	VISUAL		
3	63	C-1	<63	VISUAL		
4	⏥ | .010 |	C-1	0-003	VC-1		
5	1.00	C-3	0.998 1.006	DVI2QC		
6	Ø 60.50 −.03 +.00	B-3	60.487	IM40120QC		
7	63	B-3	<63	VISUAL		
8	Ø 61.40 +.03 −.00	B-3	61.409	DM06QC, CAL		
9	0.015 RAD	B-3	0.015	RGBQC		
10	0.06 RAD	C-3	0.06	RGBQC		
11	Ø 62.38	C-3	62.390	DVI2QC, CAL		
12	Ø 63.75	C-3	63.750	DVI2QC, CAL		
13	⊥ 0.50	C-2	0.502	DM06QC		
14	0.03 RAD MAX TYP	C-4	0.03	RGBQC		
15	Ø 61.25	C-3	61.249	DVI2QC, CAL		
16	0.335 - 0.340	DETAIL-D B-4	OK TO GAGE	PGSZQC		
17	0.206 - 0.214		0.207	DM06QC		
18	32 √c ± 8RMS		21	PSOQC		
19	Ø 64.25	C-2	64.241	DVI2QC, CAL		
20	0.335 - 0.340	DETAIL-D B-4	OK TO GAGE	PGSZQC		
21	0.206 - 0.214		0.208	DM06QC		
22	32 √c ± 8RMS		29	PSOQC		
23	63		<63	VISUAL		
24	RAD 0.020 0.035 TYP		0.03	RGBQC		
25	75° TYP		75°	VPIQC		
26	63 TYP		<63	VISUAL		KJC 8611 RANOR 10-97

RANOR, INC

G-2

DIMENSIONAL INSPECTION REPORT

FORM QA 9.1 REV. 2 (4/1/96)

Customer: PROCESS SYSTEM INTER	Level No.: 1C	Report No.: N/A
Part Description: 60 1/2 I.D. FLANGE (BSC) GROOVED	P.O. No. 555822-00	S.O. No. 7300 FM
Drawing No. & Rev. V049-4-019 REV-4	Serial No. 7300-37	Sheet 2 con't Rev.: —

Item No.	Drawing Dimension and Tolerances	Drawing Zone	Actual Dimension	Instrument Serial No.	Ref. / NCR Information	Sign Off
27	BREAK ALL EDGES (.005 R)	C-4	OK	VISUAL		KJC 661 10-6-97 RANOR
28	60° 6X DETAIL C	C-6	60°	DV12QC		
29	0.25	D-5	0.25	DV12QC		
30	0.50	D-5	0.50	DV12QC		
31	BREAK ALL EDGES (.005 R)	D-3	OK	VISUAL		
32	↧ 0.146 - 0.156	C-5	0.150	DM06QC		
33	↧ 0.080 - 0.156	C-3	0.117	DM06QC		
34	BREAK ALL EDGES (.005 R)	C-3	OK	VISUAL		
35	Ø 1.00 30X	D-5	1.009	DV12QC		
36	66.250 B.C	D-5	66.25	DV12QC		
37	6.0°	D-6	6°	DV12QC		
38	12.0°	D-6	12°	DV12QC		
39	48°	D-7	48°	DV12QC		
40	Ø 5/8 THRU	D-2	0.626	DV12QC		
41	0.76 C'BORE		0.754	DV12QC		
42	↧ 1/8		1/8	SCALE		
43	31.531 RAD		31.53	DV12QC		
44	45°		45°	SCALE		
45	1/8"		1/8	SCALE		
46	68.50 O.D. REF	C-2	—	—		
47	SCRIBE & STAMP 0°	B-2	OK	VISUAL		
48	SCRIBE S/N.	—	OK	VISUAL		KJC 661 10-6-97 RANOR

RANOR, INC. 0° ORIENTATION G-1

DIMENSIONAL INSPECTION REPORT

FORM QA 9.1 REV. 2 (4/1/96)

UNIT #9

Customer: PROCESS SYSTEMS INTER	Level No.: 1C	Report No.: N/A
Part Description: 60 1/2" I.D. FLANGE (BSC) GROOVED	P.O. No. 555822-00	S.O. No. 7300 F/m
Drawing No. & Rev. V049-4-019 REV. 4	Serial No. 7300-26	Sheet 1 con't 2 Rev.: —

Item No.	Drawing Dimension and Tolerances	Drawing Zone	Actual Dimension	Instrument Serial No.	Ref. / NCR Information	Sign Off
1	1.38 +.13 −.00	B-1	1.344 1.348	DVI2QC		KJC 6611 4-1-97 RANOR
2	125	B-1	1.001 <125	VISUAL		
3	63	C-1	<63	VISUAL		
4	⏥ | .010 |	C-1	W/0.003	VC-1		
5	1.00	C-3	1.001 1.004	DVI2QC		
6	Ø 60.50 −.03 +.00	B-3	60.496	IM40120QC		
7	63	B-3	<63	VISUAL		
8	Ø 61.40 +.03 −.00	B-3	61.422	DM06QC, CAL		
9	0.015 RAD	B-3	0.015	RGBQC		
10	0.06 RAD	C-3	0.06	RGBQC		
11	Ø 62.38	C-3	62.382	DVI2QC, CAL		
12	Ø 63.75	C-3	63.746	DVI2QC, CAL		
13	⌶ 0.50	C-2	0.500	DM06QC		
14	0.03 RAD MAX TYP	C-4	0.03	RGBQC		
15	Ø 61.25	C-3	61.256	DVI2QC, CAL		
16	0.335 - 0.340	DETAIL-D B-4	OK TO GAGE	PGS2QC		
17	0.206 - 0.214	↓	0.207	DM06QC		
18	32 C ± 8RMS	↓	23	PSOQC		
19	Ø 64.25	C-2	64.258	DVI2QC, CAL		
20	0.335 - 0.340	DETAIL-D B-4	OK TO GAGE	PGS2QC		
21	0.206 - 0.214	↓	0.207	DM06QC		
22	32 C ± 8RMS	↓	27	PSOQC		
23	63	↓	<63	VISUAL		
24	RAD 0.020 0.035 TYP	↓	0.03	RGBQC		
25	75° TYP	↓	75°	VPIQC		↓
26	63 TYP	↓	<63	VISUAL		KJC 6611 4-1-97 RANOR

RANOR, INC

G-1

DIMENSIONAL INSPECTION REPORT

FORM QA 9.1 REV. 2 (4/1/96)

Customer: PROCESS SYSTEM INTER	Level No.: 1C	Report No.: N/A
Part Description: 60 1/2 I.D. FLANGE (BSC) GROOVED	P.O. No. 555822-00	S.O. No. 7300 FM
Drawing No. & Rev. V049-4-019 REV-4	Serial No. 7300-26	Sheet 2 con't Rev.: —

Item No.	Drawing Dimension and Tolerances	Drawing Zone	Actual Dimension	Instrument Serial No.	Ref. / NCR Information	Sign Off
27	BREAK ALL EDGES (.005 R)	C-4	OK	VISUAL		KJC 661 6-11-97 RANOR
28	60° 6X DETAIL C	C-6	60°	DVI2QC		
29	0.25	D-5	0.250	DVI2QC		
30	0.50	D-5	0.499	DVI2QC		
31	BREAK ALL EDGES (.005 R)	D-3	OK	VISUAL		
32	↧ 0.146 - 0.156	C-5	0.154	DMO6QC		
33	↧ 0.080 - 0.156	C-3	0.117	DMO6QC		
34	BREAK ALL EDGES (.005 R)	C-3	OK	VISUAL		
35	Ø 1.00 30X	D-5	1.007	DVI2QC		
36	66.250 B.C.	D-5	66.25	DVI2QC		
37	60°	D-6	60°	DVI2QC		
38	12.0°	D-6	12°	DVI2QC		
39	48°	D-7	48°	DVI2QC		
40	Ø 5/8 THRU	D-2	0.627	DVI2QC		
41	0.76 C'BORE		0.754	DVI2QC		
42	↧ 1/8		1/8	SCALE		
43	31.531 RAD		31.53	DVI2QC		
44	45°		45°	SCALE		
45	1/8"		1/8	SCALE		
46	68.50 O.D. REF	C-2	—	—		
47	SCRIBED STAMP 0°	B-2	OK	VISUAL		
48	SCRIBE S/N.	—	OK	VISUAL		KJC 661 6-11-97 RANOR

RANOR, INC. 0° ORIENTATION G-1

DIMENSIONAL INSPECTION REPORT

FORM QA 9.1 REV. 2 (4/1/96)

UNIT #9

Customer: PROCESS SYSTEMS INTER	Level No.: 1C	Report No.: N/A
Part Description: 60 1/2" I.D. FLANGE (BSC) GROOVED	P.O. No. 555822-00	S.O. No. 7300 F/M
Drawing No. & Rev. V049-4-019 REV-4	Serial No. 7300-27	Sheet 1 con't 2 Rev.: —

Item No.	Drawing Dimension and Tolerances	Drawing Zone	Actual Dimension	Instrument Serial No.	Ref. / NCR Information	Sign Off
1	1.38 +.13 −.00	B-1	1.443 1.454	DVI2QC		KJC 061 6-16-97 RANOR
2	125	B-1	<125	VISUAL		
3	63	C-1	<63	VISUAL		
4	▱ | .010 |	C-1	w 0.003	VC-1		
5	1.00	C-3	1.000 1.003	DVI2QC		
6	Ø 60.50 +.03 +.00	B-3	60.484	IM40120QC		
7	63	B-3	<63	VISUAL		
8	Ø 61.40 +.03 −.00	B-3	61.408	DM06QC, CAL		
9	0.015 RAD	B-3	.015	RGBQC		
10	0.06 RAD	C-3	0.06	RGBQC		
11	Ø 62.38	C-3	62.376	DVI2QC, CAL		
12	Ø 63.75	C-3	63.242	DVI2QC, CAL		
13	↧ 0.50	C-2	0.501	DM06QC		
14	0.03 RAD MAX TYP	C-4	0.13	RGBQC		
15	Ø 61.25	C-3	61.248	DVI2QC, CAL		
16	0.335 - 0.340	DETAIL-D B-4	OK-TO GAGE	PGS2QC		
17	0.206 - 0.214	↓	0.207	DM06QC		
18	32 C ± 8RMS	↓	21	PSOIQC		
19	Ø 64.25	C-2	64.248	DVI2QC, CAL		
20	0.335 - 0.340	DETAIL-D B-4	OK-TO GAGE	PGS2QC		
21	0.206 - 0.214	↓	0.209	DM06QC		
22	32 C ± 8RMS	↓	27	PSOIQC		
23	63	↓	<63	VISUAL		
24	RAD 0.020 0.035 TYP	↓	0.03	RGBQC		
25	75° TYP	↓	75°	VPIQC		
26	63 TYP	↓	<63	VISUAL		KJC 061 6-16-97 RANOR

RANOR, INC

G-1

DIMENSIONAL INSPECTION REPORT

FORM QA 9.1 REV. 2 (4/1/96)

Customer: PROCESS SYSTEM INTER	Level No.: 1C	Report No.: N/A
Part Description: 60 1/2 I.D. FLANGE (BSC) GROOVED	P.O. No. 555822-00	S.O. No. 7300 FM
Drawing No. & Rev. V049-4-019 REV-4	Serial No. 7300-27	Sheet 2 con't Rev.: —

Item No.	Drawing Dimension and Tolerances	Drawing Zone	Actual Dimension	Instrument Serial No.	Ref. / NCR Information	Sign Off
27	BREAK ALL EDGES (.005 R)	C-4	OK	VISUAL		KJC 6/16-11-97 RANOR
28	60° 6X DETAIL C	C-6	60°	DVI20QC		
29	0.25	D-5	0.250	DVI20QC		
30	0.50	D-5	0.501	DVI20QC		
31	BREAK ALL EDGES (.005 R)	D-3	OK	VISUAL		
32	↧ 0.146 - 0.156	C-5	0.152	DMO60QC		
33	↧ 0.080 - 0.156	C-3	0.120	DMO60QC		
34	BREAK ALL EDGES (.005 R)	C-3	OK	VISUAL		
35	Ø 1.00 30X	D-5	1.004	DVI20QC		
36	66.250 B.C.	D-5	66.25	DVI20QC		
37	6.0°	D-6	6°	DVI20QC		
38	12.0°	D-6	12°	DVI20QC		
39	48°	D-7	48°	DVI20QC		
40	Ø 5/8 THRU	D-2	0.628	DVI20QC		
41	0.76 C'BORE		0.754	DVI20QC		
42	↧ 1/8		1/8	SCALE		
43	31.531 RAD		31.53	DVI20QC		
44	45°		45°	SCALE		
45	1/8"		1/8	SCALE		
46	68.50 O.D. REF	C-2	—	—		
47	SCRIBE & STAMP 0°	B-2	OK	VISUAL		
48	SCRIBE S/N.	—	OK	VISUAL		KJC 6/16-11-97 RANOR

RANOR, INC Final Acceptance: By:_____ Date:_____

DIMENSIONAL INSPECTION REPORT

FORM QA 9.1 REV. 3 (10/15/96)

UNIT #9

Customer: PROCESS SYSTEMS INTER	Level No.: 2C	Report No.: N/A
Part Description: 104 1/2" I.D. FLANGE (BSC) FLAT FACE	P.O. No. 555822-00	Job No. 7300 F/M
Drawing No. & Rev. V049-4041 REV. 2	Serial No. 7300-9	Page 1 con't —

Item No.	Drawing Dimension and Tolerances	Drawing Zone	Actual Dimension	Instrument Serial No.	Ref. / NCR Information	Sign Off
1	1.00 +.13 −.00	D-1	1.052 1.058	DV12QCI		KJC 6611-11-97 RANOR
2	125 √		< 125	VISUAL		
3	32 √ C ± 8 RMS		30	PSO1QCI		
4	▱ | 0.015 |		w/0.005	I/C-3		
5	0.50	D-2	0.490 0.493	DV12QCI		
6	0.06 R.	D-2	0.06	RG8QCI		
7	1/8	C-3	1/8	SC06QCI-2		
8	45°	C-3	45°	SC06QCI-2		
9	∅ 105.13 +0.06 −0.00	D-3	105.152	DM06QCI		
10	∅ 1.00 THRU 48X	D-5	1.002	DV12QCI		
11	∅ 110.250 B.C.	D-5	110.25	DV12QCI		
12	3.75°	D-6	3.75°	DV12QCI		
13	7.50° (CHORD 7.2106)	D-6	7.5°	DV12QCI		
14	∅ 104.50 ±0.00 −0.03 I.D.	C-7	104.470	IM40K6QCI		
15	63 √		< 63	VISUAL		
16	∅ 5/8 THRU 2X	C-2	0.627	DV12QCI		
17	∅ 0.76 C'BORE		0.754			
18	1/8 ↧		1/8			
19	53.531 R.		53.53			
20	45°	D-7	45°			
21	180° APART	C-2	180°			
22	∅ 112.50 O.D. REF.	C-5	—	—		
23	SCRIBE & STAMP 0°	B-1	OK	VISUAL		
24	SCRIBE S/N	—	OK			KJC 6611-11-97 RANOR

RANOR, INC

DIMENSIONAL INSPECTION REPORT
FORM QA 9.1 REV. 2 (4/1/96)

UNIT #9

Customer: PROCESS SYSTEMS INTER.	Level No.: 1C	Report No.: N/A
Part Description: 104 1/2" I.D. FLANGE (BSC) GROOVED	P.O. No. 555822-00	S.O. No. 7300 FM
Drawing No. & Rev. V049-4-022 REV-5	Serial No. 7300-6	Sheet 1 con't 2 Rev.: —

Item No.	Drawing Dimension and Tolerances	Drawing Zone	Actual Dimension	Instrument Serial No.	Ref. / NCR Information	Sign Off
1	1.25 +0.13 −0.00	B-1	1.298-1.305	DV12QCI		RRG 689 3-6-97 RANOR
2	125		125	VISUAL		RRG 689 3-6-97 RANOR
3	63		63	VISUAL		RRG 689 3-6-97 RANOR
4	⏥ |.015|		0.002	VC-3 DI23891QCI		RRG 689 3-6-97 RANOR
5	1.00	B-3	0.985-0.992	MD1QCI-1		RRG 689 3-6-97 RANOR
6	Ø 104.50	B-3	R.D. 3-6-97 104.4829	IM40120QCI		RRG 689 3-6-97 RANOR
7	63	B-2	63	VISUAL		RRG 689 3-6-97 RANOR
8	Ø 105.63	B-2	105.64	DM06QCI		RRG 689 3-6-97 RANOR
9	0.015 RAD		0.015	RG8QCI		RRG 689 3-6-97 RANOR
10	0.060 RAD		0.060	RG8QCI		RRG 689 3-6-97 RANOR
11	Ø 106.38		106.389	DV12QCI		RRG 689 3-6-97 RANOR
12	Ø 107.75		107.745	DV12QCI		RRG 689 3-6-97 RANOR
13	↧ 0.38	B-1	0.381-0.383	DM06QCI		RRG 689 3-6-97 RANOR
14	0.03 RAD MAX	C-3	0.03	RG8QCI		RRG 689 3-6-97 RANOR
15	Ø 105.25	B-2	105.249	DV12QCI		RRG 689 3-6-97 RANOR
16	0.335-0.340	B-4	0.340	DV12QCI		RRG 689 3-6-97 RANOR
17	↧ 0.206-0.214		0.206-0.213	DM06QCI		RRG 689 3-6-97 RANOR
18	32 C ± 8 RMS		40	PS01QCI		RRG 689 3-6-97 RANOR
19	Ø 108.25	B-2	108.253	DV12QCI		RRG 689 3-6-97 RANOR
20	0.335-0.340	B-4	0.340	DV12QCI		RRG 689 3-6-97 RANOR
21	↧ 0.206-0.340		0.206-0.213	DM06QCI		RRG 689 3-6-97 RANOR
22	32 C ± 8 RMS		37	PS01QCI		RRG 689 3-6-97 RANOR
23	63 TYP		63	VISUAL		RRG 689 3-6-97 RANOR
24	R 0.020-0.035 TYP		0.025	RG8QCI		RRG 689 3-6-97 RANOR
25	75° TYP		75°	VP1QCI		RRG 689 3-6-97 RANOR
26	BREAK ALL EDGES (.005R)		O.K.	VISUAL		RRG 689 3-6-97 RANOR

RANOR, INC

DIMENSIONAL INSPECTION REPORT

FORM QA 9.1 REV. 2 (4/1/96)

Customer: PROCESS SYSTEMS INTER	Level No.: 1C	Report No.: N/A
Part Description: 10 4 1/2 I.D. FLANGE (BSC) GROOVED	P.O. No. 555822-00	S.O. No. 7300 FM
Drawing No. & Rev. V049-4-022 REV-5	Serial No. 7300-6	Sheet 2 con't — Rev.: —

Item No.	Drawing Dimension and Tolerances	Drawing Zone	Actual Dimension	Instrument Serial No.	Ref. / NCR Information	Sign Off
27	63	B-4	63	VISUAL		RRG 689 3-6-97 RANOR
28	45° 8X	C-8	45°	DV12QCI		RRG 689 3-6-97 RANOR
29	0.25	D-4	0.246-0.248	DV12QCI		RRG 689 3-6-97 RANOR
30	0.50	D-4	0.492-0496	DV12QCI		RRG 689 3-6-97 RANOR
31	BREAK EDGES (.005 R)	D-3	O.K.	VISUAL		RRG 689 3-6-97 RANOR
32	↧ 0.146 - 0.156	C-4	0.150-0.154	DM06QCI		RRG 689 3-6-97 RANOR
33	↧ 0.080 - 0.156	C-3	0.111-0.116	DM06QCI		RRG 689 3-6-97 RANOR
34	BREAK EDGES (.005 R)	C-2	O.K.	VISUAL		RRG 689 3-6-97 RANOR
35	Ø 1.00 THRU 48X	D-5	0.998	DV12QCI		RRG 689 3-6-97 RANOR
36	110.25 B.C. CHORD	D-5	110.25	DV12QCI		RRG 689 3-6-97 RANOR
37	3.75°	D-6	3.75°	DV12QCI		RRG 689 3-6-97 RANOR
38	7.50° CHORD 7.210	D-6	7.50°	DV12QCI		RRG 689 3-6-97 RANOR
39	7.50° SECTION A-A	PER D.B. D-6	7.50°	DV12QCI		RRG 689 3-6-97 RANOR
40	Ø 5/8 THRU 2X TYP	D-1	5/8	DV12QCI		RRG 689 3-6-97 RANOR
41	0.76 C'BORE		0.755	DV12QCI		RRG 689 3-6-97 RANOR
42	↧ 1/8		1/8	SC03QCI		RRG 689 3-6-97 RANOR
43	180°		180°	DV12QCI		RRG 689 3-6-97 RANOR
44	53.531 RAD		53.53	DV12QCI		RRG 689 3-6-97 RANOR
45	45°		45°	DV12QCI		RRG 689 3-6-97 RANOR
46	1/8"		1/8	SC03QCI		RRG 689 3-6-97 RANOR
47	SCRIBE & STAMP O°	B-8	O.K.	VISUAL		RRG 689 3-6-97 RANOR
48	37.5°	↓	37.5°	DV12QCI		RRG 689 3-6-97 RANOR
49	ETCH S/N		O.K.	VISUAL		RRG 689 3-6-97 RANOR

RANOR, INC Final Acceptance: By:_____ Date:_____

DIMENSIONAL INSPECTION REPORT

FORM QA 9.1 REV. 3 (10/15/96)

Customer: PSI	Level No.:	Report No.: —
Part Description: Pre BSC SHELL LOWER MACH	P.O. No. 555822-00	Job No. 7300F/m
Drawing No. & Rev. V049-4-003 REV-3	Serial No. 003-09	Page 1 con't

Item No.	Drawing Dimension and Tolerances	Drawing Zone	Actual Dimension	Instrument Serial No.	Ref. / NCR Information	Sign Off
1	Ø61.37 +.00 −.03 NOTE 11	B-5	61.353	10089639	0°	RNO 6-11-97
2	Ø61.37 +.00 −.03		61.355	10089639	90°	
3	Ø61.37 +.00 −.03		61.356	10089639	180°	
4	Ø61.37 +.00 −.03		61.359	10089639	270°	
5	0.375 MIN TYP	NOTE 11	0.320 0.550	M01QCI-1	NCR # 1058	
6	↧ 9/16 TYP	11	9/16	SC06RCI-2		
7	55.87	C-3	55.869 55.890	HC-9 DI23891QCI		
8	▱ .015	A-8	0.004	M.T.&E. TYP.	0°	
9	⊥ .015 A	A-8	0.006		↓	
10	▱ .015	A-4	0.007		90°	
11	⊥ .015 A	↓	0.009		↓	
12	// .015 B	↓	N/A	——	↓	
13	▱ .015	A-6	0.004		180°	
14	// .015 B	↓	0.004		↓	
15	⊥ .015 A	↓	0.006		↓	
16	▱ .015	A-5	0.007		270°	
17	⊥ .015 A	↓	0.008		↓	
18	⊥ .015 B	↓	0.008		↓	
19	55.500 TYP 4X	B-8	55.498 55.499			
20	▱ .015	B-8	0.001			
21	// .015 A	B-8	0.01			
22	⊥ .015 B	B-8	0.01	↓		
23	Ø 14.06 TYP 4X	3	MIN 14.057 MAX 14.068	HC-9 EF1QCI	"D" PARTS	
24	44.50 TYP 4X	B-8	44.504 44.510	HC-9 EF1QCI		
25	33.0 TYP 4X	D-8	32.9965 33.000	HC-9 EF1QCI		
26	// .025 A TYP	D-8	0.01	HC-9 DI23891QCI		
27	⊥ .025 B TYP	D-8	0.01	HC-9 DI23891QCI		

PROG: JC4100

USER: DRB

ROUTING SHEET

--- SHOP COPY ---

Parent Level

All Units

PAGE: 1
DATE: 12/1(
TIME: 15.0(

COMPANY: 1 RANOR, INC.

JOB/LOT NUMBER	JOB DESC.	PART NUMBER	PART DESCRIPTION	- CODES - REV #	JOB USER	CUSTOMER P.O. N
7300FM	LIGO VACUMM CHAMBER	V049-4-101	PSI BEAM SPLITTER CHAMBERS			555822

ORDER QTY	PROD QTY	U/M
15	15	EA

BILL TO: 16543/00
PROCESS SYSTEMS INTERNATIONAL
ACCOUNTS PAYABLE
20 WALKUP DRIVE
WESTBOROUGH MA 01581-5003

CONTACT: Kristin/Payables
TERMS: 01 1/2% 10, NET 30
SLS: TZ Tom Ziobrowski
REG: 01 Massachusetts

DATES	ORDER	REQ.SHIP	PROD START	PROD DUE
	8/26/96	2/15/97	1/15/96	2/14/97

OPERATIONS:

SEQ	W/C	OPR	DESCRIPTION	DPT	PCS/ASY	OP. QTY	OVERLAP	S/U STD	PROD STD	PROD HRS	START	DUE	IN
			THIS IS THE PARENT LEVEL, THIS LEVEL IS FOR ALL FINAL ASSEMBLY, CLEANING, & SHIPPING OF THE COMPLETED CHAMBER ASSEMBLIES CONSISTING OF										
			1X, LOWER BEAM SPLITTER CHAMBER PER DWG: V049-4-101										
			1X, UPPER BEAM SPLITTER CHAMBER PER DWG: V049-4-101										
			THIS LEVEL ALSO CONSISTS OF MODIFICATIONS TO A P.S.I. SUPPLIED SHIPPING SKID.										
5	EF1	010	LAY OUT	EF	1.00	15		.00		40.00	2/14/97	2/14/97	CC
10	SH1	100	Shear Per B.O.M.	SH	1.00	15		.00		3.00			
			SHEAR PARTS PER B.O.M., & SKETCHES.										
			BY: _____ DATE: _____										
20	SO1	150	Saw Cut	SW	1.00	15		.00		4.00			
			SAW PARTS PER B.O.M.										
			BY: _____ DATE: _____										
30	FC1	050	Thermal Cut	FC	1.00	15		.00		2.00			
			F/C ITEM No. 1 per B.O.M., & DNC.										
			BY: Rog- DATE: 12-17-96										
40	PB1	250	Forming per sketch	PB	1.00	15		.00		4.00			
			FORM THE 1/8" ALUM. LINER, & 1/2" STEEL PLATE PER SKETCHES.										

COMPANY: 1 RANOR, INC.

JOB/LOT NUMBER	JOB DESC.	PART NUMBER	PART DESCRIPTION	- CODES - REV #	JOB USER	CUSTOMER P.O. N
7300FM	LIGO VACUMM CHAMBER	V049-4-101	PSI BEAM SPLITTER CHAMBERS			555822

OPERATIONS:

SEQ	W/C	OPR	DESCRIPTION	DPT	PCS/ASY	OP. QTY	OVERLAP	S/U STD	PROD STD	PROD HRS	START	DUE	IN
			BY: _____ DATE: _____										
50	M1	615	Machine per print	MI	1.00		15	.00		4.00			
			MACHINE 1 1/8" DIA. CLEARANCE HOLES IN ITEM NO.6 6" ON CENTER FOR 1" HARDWARE.										
			BY: _____ DATE: _____										
60	AF1	400	Welding Assembly-Fitting	AS	1.00		15	.00		6.00			
			ASSEMBLE PARTS PER ASSEMBLY SKETCHES.										
			WELD TABS ITEM #5 TO THE EDGES OF ITEM NO. 4 TO CLIP TO ITEM NO 6.										
			BY: _____ DATE: _____										
80	WE1	473	GMAW - Other	WE	1.00		15	.00		8.00			
			WELD ASSEMBLY CRADLES COMPLETE PER SKETCHES.										
			BY: _____ DATE: _____										
100	FN1	480	Clean Welds & Spatters	FN	1.00		15	.00		2.50			
			BY: _____ DATE: _____										
150	AM1	795	Mechanical Assembly	DE	1.00		15	.00		10.00			
			PREPARE PART FOR FINAL INSPECTION, & shippment.										
			BY: _____ DATE: _____										
170	HC8	585	Dimensional Inspection	HB	1.00		15	.00		8.00			
			INSPECT PART COMPLETE PER CUSTOMER SUPPLIED INSPECTION PLAN (ON A N/C MACHINE).										
			BY: _____ DATE: _____										
190	FN1	500	STEAM CLEANING	FN	1.00		15	.00		4.00			
			FINAL CLEAN PART COMPLETE										

PROG: JC4100 R O U T I N G S H E E T PAGE: 3
USER: DRB --- SHOP COPY --- DATE: 12/1(
TIME: 15.04

COMPANY: 1 RANOR, INC.

JOB/LOT NUMBER	JOB DESC.	PART NUMBER	PART DESCRIPTION	REV	- CODES - #	JOB USER	CUSTOMER P.O. N
7300FM	LIGO VACUMM CHAMBER	V049-4-101	PSI BEAM SPLITTER CHAMBERS				555822

OPERATIONS:

SEQ	W/C	OPR	DESCRIPTION	DPT	PCS/ASY	OP. QTY	OVERLAP	S/U STD	PROD STD	PROD HRS	START	DUE	IN
			BY: _____ DATE: _____										
220	Z00	525	Packaging	FN	1.00	15		.00		8.00			
			PACKAGE, & PROTECT FOR SHIPMENT.										
			BY: _____ DATE: _____										

COMPANY: 1 RANOR, INC.

JOB/LOT NUMBER	JOB DESC.	PART NUMBER	PART DESCRIPTION	- CODES - REV # JOB USER	CUSTOMER P.O.
7300FM	LIGO VACUMM CHAMBER	V049-4-101	PSI BEAM SPLITTER CHAMBERS		555822

LEVEL OF ASSY:	REV	PART NUMBER	PART DESCRIPTION	PROD QTY	START DATE	DUE DATE	PARENT LEVEL
1		V049-4-101 LEV 1	P.S.I. LOWER CHAMBER	15	1/23/97	2/11/97	

OPERATIONS:

SEQ	W/C	OPR	DESCRIPTION	DPT	PCS/ASY	OP. QTY	OVERLAP	S/U STD	PROD STD	PROD HRS	START	DUE	IN

THIS IS LEVEL 1. THIS LEVEL IS TO BE USED FOR THE FABRICATION OF THE LOWER SHELL ASSEMBLY PER DRAWING V049-4-003 SHEET# 1.

WELDING ON THIS JOB MUST BE DONE BY QUALIFIED WELDERS ONLY. WELDING WILL BE DONE BY GTAW AND PAW WELD PROCEDURES LISTED ON EACH OF THE WELD MAPS. ALL WELDS WILL BE 100% VISUALY INSPECTED.

NO AIR TOOLS CAN BE USED FOR PROCESSING THIS MATERIAL. USE ONLY ELECTRIC TOOLS. GRINDING IS ALLOWED PROVIDED THE GROUND EDGE IS CLEANED WITH A CARBIDE BURR. PLASMA EDGES MUST ALSO BE CLEANED WITH CARBIDE BURRS.

ALL MATERAILS ARE BEING SUPPLIED BY THE CUSTOMER.

MATERIAL: 304 L STAINLESS STEEL.

USE ONLY CLEAN CINCINNATI MILICRON CIMTECK 410 FOR MACHINE COOLANT.

USE ONLY " OAKITE " IMPRO -CLEAN 1300 FOR PRESSURE WASHING MATERIAL, FOLLOWED BY CLEAN STEAM.

REFER TO THE LEVELS BELOW FOR COMPONENT PART FABRICATION.

LEV 1A: LOWER SHELL
LEV 1B: LOWER HEAD (ITEM NO 1)
LEV 1C: MISC. ASSEMBLY PARTS. (see lev.1C B.O.M.)
LEV 1D: FLANGE ASSEMBLY MACHINING (items 9b,10, 11, 13)
LEV 1E: 60" LOWER SHELL PORTS.

SEQ	W/C	OPR	DESCRIPTION	DPT	PCS/ASY	OP. QTY	OVERLAP	S/U STD	PROD STD	PROD HRS	START	DUE	IN
10	EF1	010	LAY OUT	EF	1.00	15		.00		10.00	1/23/97	1/23/97	
15	AF1	400	Welding Assembly-Fitting	AS	1.00	15		.00		5.00	1/23/97	1/23/97	

INSTALL THE LOWER CYLINDER FIXTURE FOR THE FOLLOWING OPERATION.

INSTALL THE MODIFIED CUSTOMER SPIDERS IN THE LOWER

PROG: JC4100 | ROUTING SHEET | PAGE: 3
USER: DRB | --- SHOP COPY --- | DATE: 12/12
TIME: 15.12

COMPANY: 1 RANOR, INC.

JOB/LOT NUMBER	JOB DESC.	PART NUMBER	PART DESCRIPTION	- CODES - REV #	JOB USER	CUSTOMER P.O.
7300FM	LIGO VACUMM CHAMBER	V049-4-101	PSI BEAM SPLITTER CHAMBERS			555822

LEVEL OF ASSY:	REV	PART NUMBER	PART DESCRIPTION	PROD QTY	START DATE	DUE DATE	PARENT LEVEL
1		V049-4-101 LEV 1	P.S.I. LOWER CHAMBER	15	1/23/97	2/11/97	

OPERATIONS:

SEQ	W/C	OPR	DESCRIPTION	DPT	PCS/ASY	OP. QTY	OVERLAP	S/U STD	PROD STD	PROD HRS	START	DUE	IN
			CYLINDER AND REROUND TO WITHIN 1/8".										
			CHECK ROUNDNESS BY Jeff DATE 2/8/97										
			USING THE UPPER FIXTURE, REROUND THE TOP OF THE LOWER CYLINDER TO WITHIN 1/8".										
			CHECK ROUNDNESS BY Jeff DATE 2/8/97										
			FITUP PT# 1 (LOWER HEAD) TO PT# 3 (LOWER SHELL). SEE DWG# V049-4-003 SHEET# 1 DETAIL: 3.										
			USING THE MODIFIED SPIDER, REROUND THE LOWER CYLINDER HEAD TO FIT THE LOWER CYLINDER.										
			BY Jeff DATE 2/14/97										
			FORMAN TO CHECK FITUP BY [illegible] DATE 2/16/97										
20	QC2	573	Visual Inspection	QC	1.00	15		.00		1.00	1/23/97	1/23/97	
			INSPECTION OF THE CYLINDER TO THE HEAD FITUP IS REQUIRED.										
			INSPECTION OF THE ROUNDNESS IS REQUIRED. ROUNDNESS W/IN 1/8										
			INSPECTED BY: (RANOR Q.C.) Jeff L. Mayne DATE: 2-10-97										
			INSPECTED BY: (P.S.I.) [illegible] DATE 2-12-97										
			REFERENCE P.S.I. QUALITY PLAN SEQ I										
25	WE1	466	WELDING SEQUENCE.	WE	1.00	15		.00		16.00	1/23/97	1/23/97	
			WELD THE HEAD TO CYLINDER COMPLETE PER THE DRAWING AND THE WELD MAPS. READ ALL WELDING NOTES ON THE WELD MAPS.										
			USE ONLY APPROPRATE WELDING PROCEDURE LISTED ON THE WELD MAP										
			COMPLETE THE WELD MAPS. NOTIFY QC FOR THE VT INSPECTION OF THE WELDS.										

32

PROG: JC4100 | ROUTING SHEET | PAGE: 4
USER: DRB | --- SHOP COPY --- | DATE: 12/12
TIME: 15.12

COMPANY: 1 RANOR, INC.

JOB/LOT NUMBER	JOB DESC.	PART NUMBER	PART DESCRIPTION	REV	- CODES - # JOB	USER	CUSTOMER P.O.
7300FM	LIGO VACUMM CHAMBER	V049-4-101	PSI BEAM SPLITTER CHAMBERS				555822

LEVEL OF ASSY:	REV	PART NUMBER	PART DESCRIPTION	PROD QTY	START DATE	DUE DATE	PARENT LEVEL
1		V049-4-101 LEV 1	P.S.I. LOWER CHAMBER	15	1/23/97	2/11/97	

OPERATIONS:

SEQ	W/C	OPR	DESCRIPTION	DPT	PCS/ASY	OP. QTY	OVERLAP	S/U STD	PROD STD	PROD HRS	START	DUE	IN

BY MW DATE 2-18-97

CHECK WELDS BY_____ DATE_____

30 QC2 573 Visual Inspection QC 1.00 15 .00 2.00 1/23/97 1/23/97

100% VISUAL INSPECTION OF THE WELDS IS REQUIRED.

COMPLETE VISUAL INSPECTION REPORT.

INSPECTED BY: (RANOR Q.C.) JP Magnan DATE: 5-2-97

REFERENCE P.S.I. QUALITY PLAN SEQ. I

35 AF1 250 ROUNDNESS INSPECTION. AS 1.00 15 .00 4.00 1/23/97 1/23/97

THIS SEQUENCE IS TO BE USED FOR CHECKING THE ROUNDNESS OF THE LOWER CYLINDER SUBASSEMBLY.

CHECK ROUNDNESS. ROUND WITHIN 1/8".
CHECKED BY_____ DATE_____

REROUND THE SUBASSEMBLY TO WITHIN 1/8".

BY JI DATE 4/17/97

60 AF1 400 Welding Assembly-Fitting AS 1.00 15 .00 15.00 1/23/97 1/23/97

INSTALL THE 60" PORT FIXTURES ON THE I.D. OF THE CYLINDER.

TRIAL FIT THE 60" DIA. PORTS TO EACH OF THE LOCATIONS.
INSPECT THE FITUP ON EACH OF THE PORTS.

CUT-OUT 59 1/2" ROUGH OPENINGS, & RE-CHECK THE FIT-UP OF AT LEAST ONE OF THE 60" DIA PORT.

BY: JI DATE: 4/16/97

********** SEND TO THE MACHINE SHOP **********
SEND THE CYLINDER ASSEMBLY TO THE MACHINE SHOP.

W1

PROG: JC4100 | ROUTING SHEET | PAGE: 5
USER: DRB | --- SHOP COPY --- | DATE: 12/12
TIME: 15.12

COMPANY: 1 RANOR, INC.

JOB/LOT NUMBER	JOB DESC.	PART NUMBER	PART DESCRIPTION	REV	- CODES - # JOB	USER	CUSTOMER P.O. N
7300FM	LIGO VACUMM CHAMBER	V049-4-101	PSI BEAM SPLITTER CHAMBERS				555822

LEVEL OF ASSY:	REV	PART NUMBER	PART DESCRIPTION	PROD QTY	START DATE	DUE DATE	PARENT LEVEI
1		V049-4-101 LEV 1	P.S.I. LOWER CHAMBER	15	1/23/97	2/11/97	

OPERATIONS:

SEQ	W/C	OPR	DESCRIPTION	DPT	PCS/ASY	OP. QTY	OVERLAP	S/U STD	PROD STD	PROD HRS	START	DUE	IN
70	EM1	600	Programming	EM	1.00	15		.00		8.00	1/23/97	1/23/97	

PROGRAM TO MACHINE THE 60" PORT OPENINGS, 1/2" EXTRA STOCK HAS BEEN ALLOWED ON THE I.D. FOR MACHINING.

LAYOUT ON THE MACHINE THE 1/2" EXTRA STOCK ON THE TOP FLANGE END, AND THE LOCATION (center line) OF THE OUTSIDE ATTACHMENTS.

BY_____ DATE_____

75	HC8	615	Machine per print	HB	1.00	15		.00		20.00	1/23/97	1/23/97	

MACHINE THE 60" PORT LOCATIONS PER THE MACHINE SHOP OPERATIONS SHEET AND INSTRUCTIONS. MACHINE THIS FEATURE TO SIZE PER DRAWING (60.50" DIA.)

LAYOUT ALL OUTSIDE ATTACHEMENTS AND THE EXTRA STOCK ON THE TOP SURFACE OF THE SHELL.
FEATURES TO INCLUDE:

. THE CENTER LINE AND CORNERS OF THE 4 STAND MOUNTING PADS, ITEM 20.

SCRIBE LAYOUT LINES APPROX. 3/8" LONG WITH CARBIDE AT 4 LOCATIONS , 0, 90, 180, 270,DEG. FOR THE 60" PORTS.

BY SB DATE 4-23-97

80	DE1	770	Deburring	DE	1.00	15		.00		4.00	1/23/97	1/23/97	

DEBURR EDGES, DO NOT ROUND OVER OR HEAVY CHAMFER

USE ONLY ELECTRIC TOOLS WITH CARBIDE BURRS FOR DEBURRING.

BY: JB DATE: 4-23-97

85	QC3	585	Dimensional Inspection	QC	1.00	15		.00		4.00	1/23/97	1/23/97	

DIMENSIONAL INSPECTION OF THE FOLLOWING ITEMS IS REQUIRED:

INSPECT THE 60"PORT LOCATIONS PER DWG# V049-4-003.

COMPANY: 1 RANOR, INC.

JOB/LOT NUMBER	JOB DESC.	PART NUMBER	PART DESCRIPTION	REV	- CODES - #	JOB USER	CUSTOMER P.O. N
7300FM	LIGO VACUMM CHAMBER	V049-4-101	PSI BEAM SPLITTER CHAMBERS				555822

LEVEL OF ASSY:	REV	PART NUMBER	PART DESCRIPTION	PROD QTY	START DATE	DUE DATE	PARENT LEVEI
1		V049-4-101 LEV 1	P.S.I. LOWER CHAMBER	15	1/23/97	2/11/97	

OPERATIONS:

SEQ	W/C	OPR	DESCRIPTION	DPT	PCS/ASY	OP. QTY	OVERLAP	S/U STD	PROD STD	PROD HRS	START	DUE	IN

INSPECT THE LAYOUT LOCATIONS FOR THE SUPPORT PAD LOCATIONS.

INSPECT THE EXTRA STOCK LAYOUT ON THE TOP OF THE SHELL.

INSPECTED BY: (RANOR Q.C.) R.R.D. DATE: 4-22-97

REFERENCE P.S.I. QUALITY PLAN SEQ. L

********** SEND TO THE FAB SHOP **********

90 FN1 500 STEAM CLEANING FN 1.00 15 .00 2.00 1/23/97 1/23/97

STEAM CLEAN WITH " OAKITE " IMPRO-CLEAN 1300 AND FOLLOW WITH PURE STEAM.

BY: JR DATE: 4-23-97

95 AF1 400 Welding Assembly-Fitting AS 1.00 15 .00 20.00 1/23/97 1/23/97

INSPECT THE ROUNDNESS OF THE CYLINDER ASSEMBLY. ROUNDNESS MUST BE WITHIN 1/8".

CHECK ROUNDNESS BY SI DATE 4/24/97

FITUP PART# 12 (60" PORTS) TO THE LOWER SHELL. BRACE AND FIXTURE THE ASSEMBLY AS REQUIRED FOR WELDING. SEE DWG# V049-4-003, SHEET# 1 DETAIL: 3.

NOTE: HAVE THE LOCATIONS BEHIND PT# 16 (STIFFINING RING) WELDED.

FITUP AND TACK PART# 16 (STIFFINING RING) TO THE SHELL SUBASSEMBLY.

FITUP AND TACK PART# 15 (SHELL STIFFINER) TO THE SHELL.

FITUP AND TACK THE SUPPORT PAD SUBASSEMBLIES (PT# 20 & 55) TO THE SHELL. SEE DWG# V049-4-101 FOR THE FITUP DIMENSIONS.

NOTE: THE OUTSIDE OF THE SHELL HAS BEEN SCRIBED FOR THE LOCATIONS OF THE PARTS.

PROG: JC4100

ROUTING SHEET

--- SHOP COPY ---

PAGE:
DATE: 12/1
TIME: 15.1

USER: DRB

COMPANY: 1 RANOR, INC.

JOB/LOT NUMBER	JOB DESC.	PART NUMBER	PART DESCRIPTION	REV #	- CODES - JOB USER	CUSTOMER P.O.
7300FM	LIGO VACUMM CHAMBER	V049-4-101	PSI BEAM SPLITTER CHAMBERS			555822

LEVEL OF ASSY:	REV	PART NUMBER	PART DESCRIPTION	PROD QTY	START DATE	DUE DATE	PARENT LEVEL
1		V049-4-101 LEV 1	P.S.I. LOWER CHAMBER	15	1/23/97	2/11/97	

OPERATIONS:

SEQ	W/C	OPR	DESCRIPTION	DPT	PCS/ASY	OP. QTY	OVERLAP	S/U STD	PROD STD	PROD HRS	START	DUE	IN
			BY SL DATE 4/28/97										
			FORMAN TO CHECK FITUP BY JAB DATE 4-28-97										
100	WE1	466	GTAW-SS / PAW	WE	1.00	15		.00		40.00	1/23/97	1/23/97	
			WELD THE SHELL SUBASSEMBLY COMPLETE PER THE DRAWING AND THE WELD MAPS. COMPLETE EACH OF THE WELD MAPS.										
			READ ALL NOTES ON THE WELD MAPS.										
			NOTIFY QC FOR THE VISUAL INSPECTION OF THE WELDS.										
			BY P DATE 4-30-97										
105	QC2	585	VISUAL INSPECTION.	QC	1.00	15		.00		10.00	1/23/97	1/24/97	
			100% VISUAL INSPECTION OF THE WELDED LOWER SHELL SUBASSEMBLY										
			COMPLETE THE VISUAL INSPECTION REPORT.										
			INSPECTED BY: (RANOR Q.C.) J.P. Magnan DATE: 5-2-97										
			INSPECTED BY: (P.S.I.) Rene Sevenal DATE 5-2-97										
110	AF1	400	Welding Assembly-Fitting	AS	1.00	15		.00		12.00	1/24/97	1/24/97	
			REMOVE THE UPPER SHELL REROUNDING FIXTURE.										
			FITUP AND TACK THE FOLLOWING INTERNAL PARTS:										
			12 PC'S PART# 21B (UPPER INTERNAL ATTACHMENT BRACKETS).										
			12 PC'S PART# 21A (LOWER INTERNAL ATTACHMENT BRACKETS).										
			4 PC'S PART# 22 (PLATFORM ATTACHMENT PLATES).										
			18 PC'S PART# 52 (INTERNAL SUPPORT RING BRACKETS).										
			2 PC'S PART# 51 (PLATFORM SUPPORT RING).										

36

PROG: JC4100

ROUTING SHEET

--- SHOP COPY ---

PAGE: 6
DATE: 12/12
TIME: 15.12

USER: DRB

COMPANY: 1 RANOR, INC.

JOB/LOT NUMBER	JOB DESC.	PART NUMBER	PART DESCRIPTION	- CODES - REV #	JOB USER	CUSTOMER P.O. N
7300FM	LIGO VACUMM CHAMBER	V049-4-101	PSI BEAM SPLITTER CHAMBERS			555822

LEVEL OF ASSY:	REV	PART NUMBER	PART DESCRIPTION	PROD QTY	START DATE	DUE DATE	PARENT LEVEI
1		V049-4-101 LEV 1	P.S.I. LOWER CHAMBER	15	1/23/97	2/11/97	

OPERATIONS:

SEQ	W/C	OPR	DESCRIPTION	DPT	PCS/ASY	OP. QTY	OVERLAP	S/U STD	PROD STD	PROD HRS	START	DUE	IN

BY SF DATE 5/1/97

FORMAN TO CHECK FITUP BY JB DATE 5/1/97

115 WE1 466 WELDING SEQUENCE. WE 1.00 15 .00 30.00 1/24/97 1/24/97

WELD THE INTERNAL PARTS COMPLETE PER THE WELD MAPS AND THE DRAWING.

SIGN OFF EACH OF THE WELD MAPS.
READ ALL NOTES ON THE WELD MAPS.

BY: P DATE: 5/1/97

120 QC2 573 Visual Inspection QC 1.00 15 .00 4.00 1/24/97 1/24/97

100% VISUAL INSPECTION OF ALL INTERNAL WELDS IS REQUIRED.
COMPLETE THE VISUAL INSPECTION REPORT.

INSPECTED BY: (RANOR Q.C.) RJE DATE: 6/18/97

REF. P.S.I. QUALITY PLAN SEQ. Q.

130 FN1 500 SPOT PASSIVATE FN 1.00 15 .00 8.00 1/24/97 1/24/97

READ THE MANUFACTURERS TECK DATA SHEETS 1 THRU 4 PRIOR TO APPLYING SOLUTION. USE APPROPRIATE MATERIAL HANDLING AND PROTECTIVE GEAR WHILE USING THE SOLUTION.

SPOT PASSIVAT THE I.D. USING CAL- CLEAN 76-2x

APPLY PER MANUFACTURERS INSTRUCTIONS. APPLY TO RUSTED AREAS ONLY.

SAFETY EQUIPMENT TO INCLUDE THE FOLLOWING:

ACID/CHEMICAL GOGGLES GLOVES
FACE SHIELD DISPOSABLE BUG SPRAYER

BY: JB DATE: 5/5/97

133 AF1 400 ROUNDNESS INSPECTION. AS 1.00 15 .00 2.00 1/24/97 1/24/97

(25)

PROG: JC4100 | ROUTING SHEET | PAGE: 5
USER: DRB | --- SHOP COPY --- | DATE: 12/12
TIME: 15.12

COMPANY: 1 RANOR, INC.

JOB/LOT NUMBER	JOB DESC.	PART NUMBER	PART DESCRIPTION	- CODES - REV # JOB USER	CUSTOMER P.O. N
7300FM	LIGO VACUMM CHAMBER	V049-4-101	PSI BEAM SPLITTER CHAMBERS		555822

LEVEL OF ASSY:	REV	PART NUMBER	PART DESCRIPTION	PROD QTY	START DATE	DUE DATE	PARENT LEVEI
1		V049-4-101 LEV 1	P.S.I. LOWER CHAMBER	15	1/23/97	2/11/97	

OPERATIONS:

SEQ	W/C	OPR	DESCRIPTION	DPT	PCS/ASY	OP. QTY	OVERLAP	S/U STD	PROD STD	PROD HRS	START	DUE	IN
			INSPECTION OF THE ROUNDNESS ON THE LOWER SHELL ASSEMBLY IS REQUIRED BEFORE STRESS RELIEVING.										
			ROUNDNESS OF THE SHELL IS TO BE WITHIN 1/8".										
			BY_____ DATE_____										
135	FN1	500	STEAM CLEANING	FN	1.00	15		.00		4.00	1/24/97	1/24/97	
			STEAM CLEAN PER P.S.I. PROCEDURE # 049-2-046, step 4.1										
			N/A Job BY: _____ DATE:_____										
140	OV1	546	Thermocouple Stress Cycle	FN	1.00	15		.00		12.00	1/27/97	1/27/97	
			STRESS RELIEVE THE LOWER SHELL IN THE NEUTRAL POSITION (standing up) WITH BAFFLES TO PROTECT FROM ANY DIRECT FLAME BURNERS. NO LOCALLIZED HOT SPOTS.										
			HEAT THE VESSEL AT A RATE OF 100 DER. F. PER HOUR ABOVE 350 DEG. F. UP TO 1000 DEG. F. +/-50 DEG. HOLD FOR 4 HOURS. COOL AT A RATE OF 100 DEG. F. PER HOUR TO 300 DEG. F. BEFORE REMOVING FROM THE FURNACE.										
			NOTE: THERMOCOUPLES REQUIRED FOR THE ENTIRE CYCLE PER STEP 4.2										
			BY: ML DATE: 5/6/97										
143	AF1	400	Welding Assembly-Fitting	AS	1.00	15		.00		2.00	1/27/97	1/27/97	
			INSTALL THE LOWER CYLINDER REROUNDING FIXTURE. NOTE THE TIMING OF THE FIXTURE TO THE PORT LOCATIONS.										
			ADJUST THE FIXTURE AND TIGHTEN AS REQUIRED FOR MACHINING.										
			BY SE DATE 5/9/97										
			********** SEND TO THE MACHINE SHOP **********										
145	HC8	615	Machine per print	HB	1.00	15		.00		40.00	1/27/97	1/27/97	

(2)

PROG: JC4100 ROUTING SHEET PAGE: 1(
USER: DRB --- SHOP COPY --- DATE: 12/1
TIME: 15.1

COMPANY: 1 RANOR, INC.

JOB/LOT NUMBER	JOB DESC.	PART NUMBER	PART DESCRIPTION	- CODES - REV #	JOB USER	CUSTOMER P.O. N
7300FM	LIGO VACUMM CHAMBER	V049-4-101	PSI BEAM SPLITTER CHAMBERS			555822

LEVEL OF ASSY:	REV	PART NUMBER	PART DESCRIPTION	PROD QTY	START DATE	DUE DATE	PARENT LEVEI
1		V049-4-101 LEV 1	P.S.I. LOWER CHAMBER	15	1/23/97	2/11/97	

OPERATIONS:

SEQ	W/C	OPR	DESCRIPTION	DPT	PCS/ASY	OP. QTY	OVERLAP	S/U STD	PROD STD	PROD HRS	START	DUE	IN

LAYOUT, & MACHINE ALL NON CRITICAL PORTS, PARTS 9,10 & 11
(REF. PORTS E,F & G).
NOTE: DO NOT MACHINE PART# 13 (D-PORT) LOCATIONS.

NOTIFY QC FOR A DIMENSIONAL INSPECTION OF THE PREMACHINING.
VERIFY CENTERLENES, AND THE EXTRA STOCK TO MACHINE THE
TOP OF THE CYLINDER FOR THE LARGE FLANGE.

LAYOUT & SCRIBE WITH CARBIDE 4 LOCATIONS 3/8" LONG AT
EACH OF THE PORTS AT 0, 90, 180, & 270 DEG.

BY: JD DATE: 5-21-97

SEQ	W/C	OPR	DESCRIPTION	DPT	PCS/ASY	OP. QTY	OVERLAP	S/U STD	PROD STD	PROD HRS	START	DUE	IN
150	QC3	585	Dimensional Inspection	QC	1.00	15		.00		2.00	1/27/97	1/27/97	

INSPECT MACHINED PORT FEATURES AND THE SCRIBE LOCATIONS.

INSPECTED BY: (RANOR Q.C.) R.H. DATE: 5-21-97

REFER TO P.S.I. QUALITY PLAN SEQ. Q

********** SEND TO THE FAB SHOP **********

SEQ	W/C	OPR	DESCRIPTION	DPT	PCS/ASY	OP. QTY	OVERLAP	S/U STD	PROD STD	PROD HRS	START	DUE	IN
155	FN1	500	STEAM CLEANING	FN	1.00	15		.00		3.00	1/27/97	1/27/97	

STEAM CLEAN USING "OAKITE 1300 THEN FOLLOWED BY STEAM ONLY.

BY: JB DATE: 5-22-97

SEQ	W/C	OPR	DESCRIPTION	DPT	PCS/ASY	OP. QTY	OVERLAP	S/U STD	PROD STD	PROD HRS	START	DUE	IN
160	AF1	400	Welding Assembly-Fitting	AS	1.00	15		.00		10.00	1/27/97	1/27/97	

FITUP AND TACK PART# 9,10 & 11 (REF. E,F & G PORTS) TO THE
LOWER SHELL SUBASSEMBLY.
SEE DWG# V049-4-003, SHEET:1, DETAIL:2

BY: JB DATE: 5-23-97

FORMAN TO CHECK FITUP BY JAB DATE 5/23/97

SEQ	W/C	OPR	DESCRIPTION	DPT	PCS/ASY	OP. QTY	OVERLAP	S/U STD	PROD STD	PROD HRS	START	DUE	IN
165	WE1	466	WELDING SEQUENCE.	WE	1.00	15		.00		20.00	1/27/97	1/27/97	

(26)

PROG: JC4100 | ROUTING SHEET | PAGE: 11
USER: DRB | --- SHOP COPY --- | DATE: 12/12
TIME: 15.12

COMPANY: 1 RANOR, INC.

JOB/LOT NUMBER	JOB DESC.	PART NUMBER	PART DESCRIPTION	- CODES - REV # JOB USER	CUSTOMER P.O. N
7300FM	LIGO VACUMM CHAMBER	V049-4-101	PSI BEAM SPLITTER CHAMBERS		555822

LEVEL OF ASSY:	REV	PART NUMBER	PART DESCRIPTION	PROD QTY	START DATE	DUE DATE	PARENT LEVEI
1		V049-4-101 LEV 1	P.S.I. LOWER CHAMBER	15	1/23/97	2/11/97	

OPERATIONS:

SEQ	W/C	OPR	DESCRIPTION	DPT	PCS/ASY	OP. QTY	OVERLAP	S/U STD	PROD STD	PROD HRS	START	DUE	IN
			WELD ALL NON CRITICAL PORTS, PART# 9,10 & 11 (REF.E,F & G PORTS) PER THE DRAWING AND WELD MAPS.										
			COMPLETE THE WELD MAPS. READ ALL NOTES ON THE WELD MAPS.										
			BY: RPL. DATE: 6/17/97										
170	QC2	573	Visual Inspection	QC	1.00	15		.00		6.00	1/27/97	1/28/97	
			INSPECT WELDING OF PART# 9,10 & 11 (E,F & G PORTS). 100% VISUAL INSPECTION OF THE WELDS IS REQUIRED. COMPLETE THE VISUAL INSPECTION REPORTS.										
			INSPECTED BY: (RANOR Q.C.) RJE DATE: 6/18/97										
			REFERENCE P.S.I. QUALITY PLAN SEQUENCE R										
180	HC8	615	Machine per print	HB	1.00	15		.00		20.00	1/28/97	1/29/97	
			SET-UP PART TO MACHINE THE ENDS OF THE 60" NOZZLES SQUARE.										
			LAYOUT AND MACHINE THE EXTRA STOCK ON THE TOP OF THE CYLINDER SHELL SUBASSEMBLY FOR THE LARGE FLANGE FITUP.										
			MACHINE THE FOUR CRITICAL "D" PORT LOCATIONS (PT# 13).										
			BY: SD JG DATE: 6-11-97										
			********** SEND TO THE FAB SHOP **********										
185	QC3	585	Dimensional Inspection	QC	1.00	15		.00		60.00	1/29/97	2/04/97	
			INSPECT THE 60" NOZZLE MACHINING, & TOP WELD PREP.										
			INSPECTED BY: (RANOR Q.C.) R.H. DATE: 6-11-97										
			INSPECTED BY: (P.S.I.) GS DATE 6-20-97										
			REFERENCE P.S.I. QUALITY PLAN SEQ. T										
			INSPECT THE LOCATION OF 4 "D" PORTS.										

(a)

PROG: JC4100 | ROUTING SHEET | PAGE: 12
USER: DRB | --- SHOP COPY --- | DATE: 12/12
TIME: 15.12

COMPANY: 1 RANOR, INC.

JOB/LOT NUMBER	JOB DESC.	PART NUMBER	PART DESCRIPTION	REV #	- CODES - JOB USER	CUSTOMER P.O. N
7300PM	LIGO VACUMM CHAMBER	V049-4-101	PSI BEAM SPLITTER CHAMBERS			555822

LEVEL OF ASSY:	REV	PART NUMBER	PART DESCRIPTION	PROD QTY	START DATE	DUE DATE	PARENT LEVEI
1		V049-4-101 LEV 1	P.S.I. LOWER CHAMBER	15	1/23/97	2/11/97	

OPERATIONS:

SEQ	W/C	OPR	DESCRIPTION	DPT	PCS/ASY	OP. QTY	OVERLAP	S/U	STD	PROD STD	PROD HRS	START	DUE	IN
			INSPECTED BY: (RANOR Q.C.) R.B. DATE: 6-11-97 NCR# 1058											
			INSPECTED BY: (P.S.I.) GS DATE 6-20-97											
			REF. P.S.I. QUALITY PLAN SEQUENCE NO. U											
190	FN1	500	STEAM CLEANING	FN	1.00		15		.00		4.00	2/04/97	2/04/97	
			STEAM CLEAN USING OAKITE 1300 , THEN STEAM ONLY.											
			BY: GS DATE: 6-11-97											
195	AF1	400	Welding Assembly-Fitting	AS	1.00		15		.00		6.00	2/04/97	2/04/97	
			FIT-UP , & FIXTURE THE LOWER SHELL FOR FLANGE ATTACHMENT.											
			NOTE: BOTH UPPER, & LOWER FLANGES WILL BE USED FOR FOR ALIGNMENT, AND RIDIGITY.											
			BY: SF DATE: 6/12/97											
200	QC2	585	Dimensional Inspection	QC	1.00		15		.00		2.00	2/04/97	2/04/97	
			INSPECT THE FIT-UP OF THE UPPER, & LOWER FLANGES TO SHELL.											
			INSPECTED BY: (RANOR Q.C.) FCS. DATE: 6/15/97											
			INSPECTED BY: (P.S.I.) GS DATE 6-20-97											
			REF. P.S.I. QUALITY PLAN SEQ. W.											
205	WE1	466	WELDING SEQUENCE.	WE	1.00		15		.00		10.00	2/04/97	2/05/97	
			WELD THE UPPER , AND LOWER FLANGES TO THE SHELLS PER DWG. AND WELD MAPS. REF. WELD MAP SHEET #9											
			READ ALL NOTES ON THE WELD MAPS. COMPLETE THE WELD MAPS.											
			BY_____ DATE_____											

(24)

PROG: JC4100 | ROUTING SHEET | PAGE: 13
USER: DRB | --- SHOP COPY --- | DATE: 12/12
TIME: 15.12

COMPANY: 1 RANOR, INC.

JOB/LOT NUMBER	JOB DESC.	PART NUMBER	PART DESCRIPTION	- CODES - REV # JOB USER	CUSTOMER P.O. N
7300FM	LIGO VACUMM CHAMBER	V049-4-101	PSI BEAM SPLITTER CHAMBERS		555822

LEVEL OF ASSY: 1 REV	PART NUMBER	PART DESCRIPTION	PROD QTY	START DATE	DUE DATE	PARENT LEVEI
	V049-4-101 LEV 1	P.S.I. LOWER CHAMBER	15	1/23/97	2/11/97	

OPERATIONS:

SEQ	W/C	OPR	DESCRIPTION	DPT	PCS/ASY	OP. QTY	OVERLAP	S/U	STD	PROD STD	PROD HRS	START	DUE	IN
210	QC2	573	Visual Inspection	QC	1.00	15			.00		1.00	2/05/97	2/05/97	

INSPECT LOWER SHELL TO FLANGE WELDS
100% VISUAL INSPECTION OF THE FLANGE WELDS IS REQUIRED.

COMPLETE THE VISUAL INSPECTION REPORT.

INSPECTED BY: (RANOR Q.C.) ~~6/17/97~~ RJE DATE: 6/17/97

INSPECTED BY: (P.S.I.) OS DATE 6-20-97

REFERENCE P.S.I. QUALITY PLAN SEQ. X

SEQ	W/C	OPR	DESCRIPTION	DPT	PCS/ASY	OP. QTY	OVERLAP	S/U	STD	PROD STD	PROD HRS	START	DUE	IN
215	AF1	400	Welding Assembly-Fitting	AS	1.00	15			.00		8.00	2/05/97	2/05/97	

FIT-UP THE 60" WELD FLANGES PER DRAWING SHEET 1
USE A STRONGBACK FIXTURE BOLTED TO THE FLANGE FOR
REINFORCEMENT WITH 1/8" ALUMINUM SHIMS BOLTED IN
BETWEEN. (this will prevent arcing of the finish surfaces)

BY: SF DATE: 6/12/97

SEQ	W/C	OPR	DESCRIPTION	DPT	PCS/ASY	OP. QTY	OVERLAP	S/U	STD	PROD STD	PROD HRS	START	DUE	IN
220	WE1	466	WELDING SEQUENCE.	WE	1.00	15			.00		16.00	2/05/97	2/06/97	

WELD THE 60" FLANGES TO NOZZLES, PER DRAWING SHEET 1.
READ ALL NOTES ON THE WELD MAP.
COMPLETE THE WELD MAPS.

BY RPL DATE 6/13/97

SEQ	W/C	OPR	DESCRIPTION	DPT	PCS/ASY	OP. QTY	OVERLAP	S/U	STD	PROD STD	PROD HRS	START	DUE	IN
225	QC2	573	Visual Inspection	QC	1.00	15			.00		4.00	2/06/97	2/06/97	

INSPECT THE 60" FLANGE TO SHELL WELDS
100% VISUAL INSPECTION OF THE 60" FLANGE WELDS IS REQUIRED.

COMPLETE THE VISUAL INSPECTION REPORT.

INSPECTED BY: (RANOR Q.C.) RJE DATE: 6/17/97

INSPECTED BY: (P.S.I.) [illegible] DATE 6-24-97

REF. P.S.I. QUALITY PLAN SEQ. Y

(42)

PROG: JC4100 | ROUTING SHEET | PAGE: 14
USER: DRB | --- SHOP COPY --- | DATE: 12/12
| | | TIME: 15.12

COMPANY: 1 RANOR, INC.

JOB/LOT NUMBER	JOB DESC.	PART NUMBER	PART DESCRIPTION	REV	- CODES - JOB USER	CUSTOMER P.O. N
7300FM	LIGO VACUMM CHAMBER	V049-4-101	PSI BEAM SPLITTER CHAMBERS			555822

LEVEL OF ASSY:	REV	PART NUMBER	PART DESCRIPTION	PROD QTY	START DATE	DUE DATE	PARENT LEVEI
1		V049-4-101 LEV 1	P.S.I. LOWER CHAMBER	15	1/23/97	2/11/97	

OPERATIONS:

SEQ	W/C	OPR	DESCRIPTION	DPT	PCS/ASY	OP. QTY	OVERLAP	S/U STD	PROD STD	PROD HRS	START	DUE	IN
230	AF1	400	Welding Assembly-Fitting	AS	1.00	15		.00		12.00	2/06/97	2/07/97	

FITUP PART# 13 (D-PORTS) USING THE ASSEMBLY FIXTURE PER DWG# V049-4-003 DEATIL: 2.

QC IS TO VERIFY THE LOCATIONS.
NOTIFY QC TO INSPECT THE LOCATIONS.

QC INSPECTION BY SE DATE 6/12/97

BY_____ DATE_____

235	WE1	466	WELDING SEQUENCE.	WE	1.00	15		.00		15.00	2/07/97	2/10/97	

WELD PART# 13 (D-PORTS) COMPLETE PER THE DRAWING AND THE WELD MAPS.
READ ALL NOTES ON THE WELD MAPS.
COMPLETE THE WELD MAPS.

BY RAR DATE 6-17-97

240	QC3	585	VISUAL INSPECTION.	QC	1.00	15		.00		4.00	2/10/97	2/10/97	

100% VISUAL INSPECTION OF PT# 13 (D-PORT) WELD IS REQUIRED.

COMPLETE THE VISUAL INSPECTION REPORT.

INSPECTED BY: (RANOR Q.C.) RJE DATE: 6/18/97

INSPECTED BY: (P.S.I.) OS DATE 6-20-97

REF. P.S.I. QUALITY PLAN SEQ. BB.

260	FN1	500	STEAM CLEANING	FN	1.00	15		.00		6.00	2/10/97	2/10/97	

STEAM CLEAN USING oakite 1300 FOLLOWED BY CLEAN STEAM.

BY: JR DATE: 6-23-97

265	QC3	585	Dimensional Inspection	QC	1.00	15		.00		10.00	2/10/97	2/11/97	

44

PROG: JC4100

USER: DRB

ROUTING SHEET

--- SHOP COPY ---

PAGE: 1
DATE: 12/12
TIME: 15.12

COMPANY: 1 RANOR, INC.

JOB/LOT NUMBER	JOB DESC.	PART NUMBER	PART DESCRIPTION	- CODES - REV #	JOB USER	CUSTOMER P.O.
7300FM	LIGO VACUMM CHAMBER	V049-4-101	PSI BEAM SPLITTER CHAMBERS			555822

LEVEL OF ASSY:	REV	PART NUMBER	PART DESCRIPTION	PROD QTY	START DATE	DUE DATE	PARENT LEVEL
1		V049-4-101 LEV 1	P.S.I. LOWER CHAMBER	15	1/23/97	2/11/97	

OPERATIONS:

SEQ	W/C	OPR	DESCRIPTION	DPT	PCS/ASY	OP. QTY	OVERLAP	S/U STD	PROD STD	PROD HRS	START	DUE	IN

FINAL INSPECTION TO BE PERFORMED ON A NC MACHINE.

.

INSPECT FINAL WELDED ASSEMBLY, CHECK WELDS, CRITICAL PORT DIMENSIONS, & FLATNESS.

.

INSPECTED BY: (RANOR Q.C.) _____ DATE: _____ MACH DIM ONLY 6-24-97 NCR# 1063

.

INSPECTED BY: (P.S.I.) _____ DATE 6-24-97

.

REF. P.S.I. QUALITY PLAN SEQ. BB.

.

.

NEXT LEVEL OF ASSEMBLY: PARENT LEVEL

7300FM

RAMOR, INC

BILL OF MATERIAL

FORM QA 4.1
REV. 1 (6/22/90)

DUE DATE

CUSTOMER PROCESS SYSTEMS DRAWING NO. V049-4-003 UNITS REQUIRED SHEET 1 OF 1

JOB NO. 7300 FM PART DESCRIPTION LOWER SHELL ASSY. PREPARED BY DJH 9-20-96 Q.C. APPROVAL

ITEM NO.	QUANTITY	MATERIAL SPECIFICATION	THICKNESS	LEVEL # 1 SIZE	LEV	SKETCH	SHEAR	SAW	THERMAL CUTTING	BEVEL	PRE-MACH.	FORM	RECORD SERIAL #'S COMMENTS	MATERIAL S-P-C	HEAT NUMBER
3	1	304LS/S		BOTTOM SHELL	1A									S	48852-1A
1	1	304LS/S		BOTTOM HEAD	1B										Y1163-5AA
		304LS/S		MISC. ASS'Y. PARTS	1C										
9	6	304LS/S		"E-PORTS" FLANGE ASS'Y.	1D										
10	6			"F-PORTS" FLANGE ASS'Y.	1D										
11	12			"G-PORTS" FLANGE ASS'Y.	1D										
12	4			60" PORTS	1E							00 90°	39734-2A 48945-5A		180° -39734-2A 270° -39734-2A
13	4			"D-PORTS" FLANGE ASS'Y.	1D									S	
20	4	304L S/S		1/2 x 12 x 12	1C										96985-2A
55	8	304L S/S		1/2 x 6.5 x 8.00	1C										47804-5A

RANOR, INC

SERIAL NO. 9

WELD MAP/WELD JOINT IDENTIFICATION SHEET

WELD MAP PAGE	CUSTOMER	CUST P.O.	JOB NO.	LEVEL NO.
1 CON'T 2	PROCESS SYSTEMS	555822-00	7300 F/M	1

DESCRIPTION **LOWER SHELL SUBASSEMBLY**
DWG. No. V049-4-003

MATERIAL 304L S/S

WELDING PROCESS:	GMAW	GTAW	FCAW	SMAW	SAW
WELD PROCEDURES	G1	T1 P-P8-P8-2 REV.0	F1	M1	S1
	G2	T2 T-P8-P8-PSI REV.0	F2	M2	S2
	G3	T3	F3	M3	S3
FILLER METAL					

PREPARED BY: DJH 9-16-96 | APPROVED BY: | W/M REV. A 10-3-96

WELDING NOTES:
1. GTAW PASS #1 FROM THE O.D.
2. GTAW PASS #2 FROM THE I.D.
3. PAW PASSES FROM THE I.D. AS REQUIRED.
4. FIT-UP WITH 1/8 TO 3/16 GAP
5. TACK FROM OUTSIDE WITH PURGE INSIDE (GTAW)
6. ONE INCH TACKS ON TEN INCH CENTERS.
7. BACKSTEP WELD ROOT PASS FROM TACK TO TACK FROM OUTSIDE (TIG)
8. GTAW PASS FROM INSIDE (TIG)
9. FILL FROM I.D. AS REQUIRED (PAW)
10. TACK BOTH SIDES (PAW)
11. WELD BOTH SIDES ALTERNATING; END WELDS ON TACKS (PAW)
12. PAW WELD AS REQUIRED.

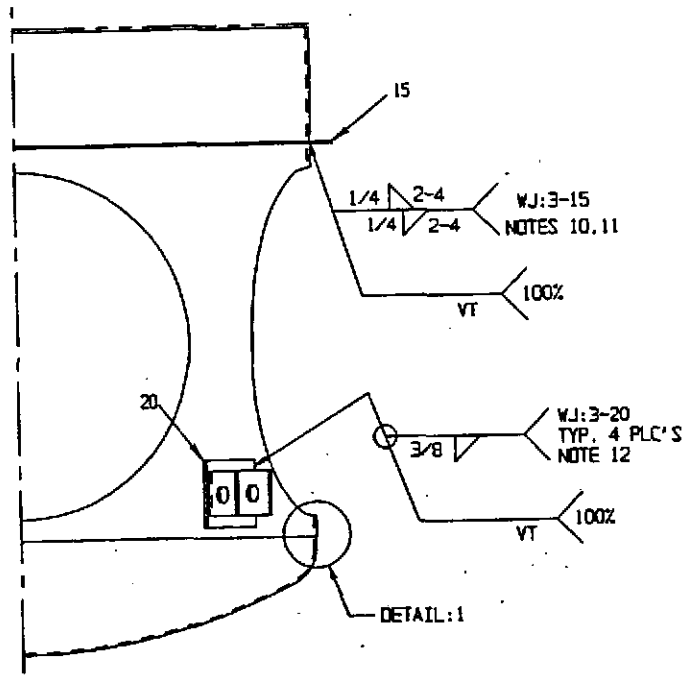

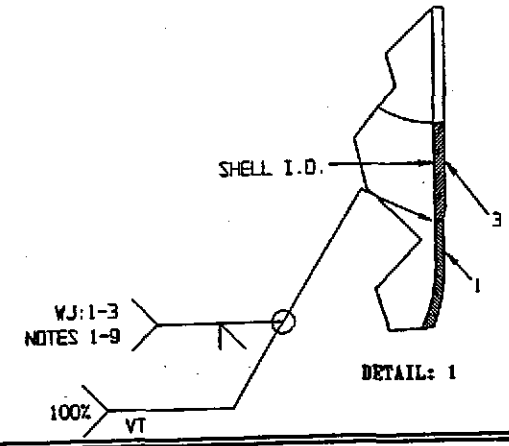

ASSEMBLY NUMBER	LOCATION NUMBER	WELD JOINT	TACKING RECORD: WELDER I.D.	TACKING RECORD: FILLER METAL HEAT/LOT NO.	TACKING RECORD: PROC.	WELD JOINT RECORD: WELDER I.D.	WELD JOINT RECORD: FILLER METAL HEAT/LOT NO.	WELD JOINT RECORD: PROC.	REPAIR RECORD: REPAIR WELDER	REPAIR RECORD: WELD REPAIR FILLER MET.	REPAIR RECORD: PROC.
1	1	3-20	O	5437864	T2	P/W	5437864	T2/T1			
1	2	3-20	O	5437864	T2	P/W	5437864	T2/T1			
1	3	3-20	O	5437864	T2	P/W	5437864	T2/T1			
1	4	3-20	O	5437864	T2	P/W	5432864	T2/T1			
1	1	1-3	BB	S710804	T2	N-A	S710840	T2/T1			
1	1	3-15	O	5437864	T2	LL/P/W	5437864 S710840	T2/T1			
		1-3				P WW	AFC834 CFC834	T2 T1			

RANOR, INC

SERIAL NO. 9

WELD MAP/WELD JOINT IDENTIFICATION SHEET

WELD MAP PAGE	CUSTOMER	CUST P.O.	JOB NO.	LEVEL NO.
2 CON'T 3	PROCESS SYSTEMS	555822-00	7300 F/M	1

DESCRIPTION: LOWER SHELL SUBASSEMBLY
DWG. No. V049-4-003

MATERIAL: 304L S/S

WELDING PROCESS:	GMAW		GTAW		FCAW		SMAW		SAW	
WELD PROCEDURES	G1		T1	P-P8-P8-2 REV.0	F1		M1		S1	
	G2		T2	T-P8-P8-PSI REV.0	F2		M2		S2	
	G3		T3		F3		M3		S3	
FILLER METAL										

PREPARED BY: DJH 9-16-96 | APPROVED BY: | W/M REV. -

WELDING NOTES:
1. GTAW TACK OUTSIDE
2. GTAW WELD INSIDE
3. PAW STICH WELD OUTSIDE AS REQUIRED.

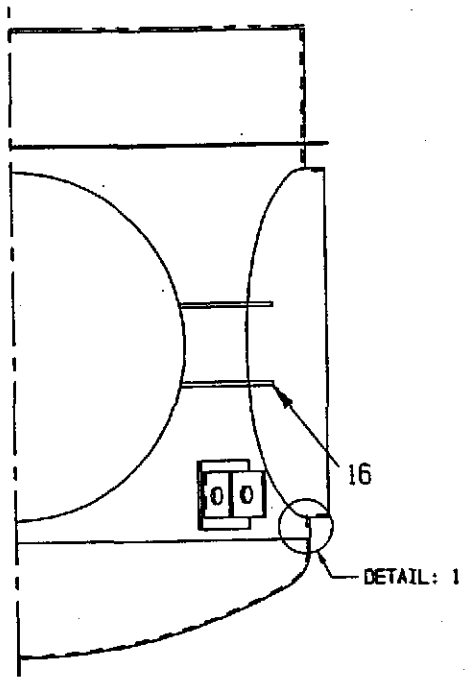

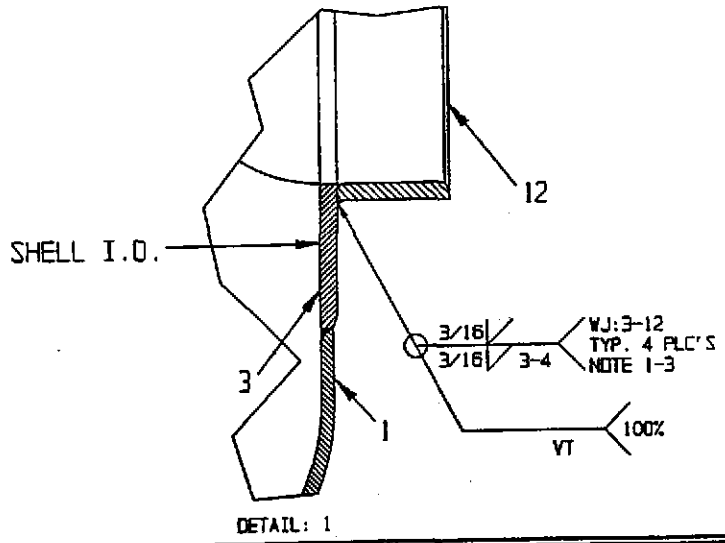

ASSEMBLY NUMBER	LOCATION NUMBER	WELD JOINT	TACKING RECORD: WELDER I.D.	TACKING RECORD: FILLER METAL HEAT/LOT NO.	TACKING RECORD: PROC.	WELD JOINT RECORD: WELDER I.D.	WELD JOINT RECORD: FILLER METAL HEAT/LOT NO.	WELD JOINT RECORD: PROC.	REPAIR RECORD: REPAIR WELDER	REPAIR RECORD: WELD REPAIR FILLER MET.	REPAIR RECORD: PROC.
1	1	3-12 0°	O	S43687F	T2	LL/P/W	5437864 S710840	T2/T1			
1	2	3-12 90°	O	S436879	T2	LL/P/W	5437864 S710840	T2/T1			
1	3	3-12 180°	O	S436879	T2	LL/P/W	5437864 S710840	T2/T1			
1	4	3-12 270°	O	S436376	T2	LL/P/W	5437864 S710840	T2/T1			

RANOR, INC

SERIAL NO. 9

WELD MAP/WELD JOINT IDENTIFICATION SHEET

WELD MAP PAGE	CUSTOMER	CUST P.O.	JOB NO.	LEVEL NO.
3 CON'T 4	PROCESS SYSTEMS	555822-00	7300 F/M	1

DESCRIPTION: LOWER SHELL SUBASSEMBLY
DWG. No. V049-4-003

MATERIAL: 304L S/S

WELDING PROCESS:	GMAW	GTAW	FCAW	SMAW	SAW
WELD PROCEDURES	G1	T1 P-P8-P8-2 REV.0	F1	M1	S1
	G2	T2 T-P8-P8-PSI REV.0	F2	M2	S2
	G3	T3	F3	M3	S3
FILLER METAL					

PREPARED BY: DJH 9-16-96

APPROVED BY:

W/M REV. -

WELDING NOTES:
1. TACK BOTH SIDES (PAW)
2. WELD BOTH SIDES ALTERNATING; END WELDS ON TACKS (PAW)

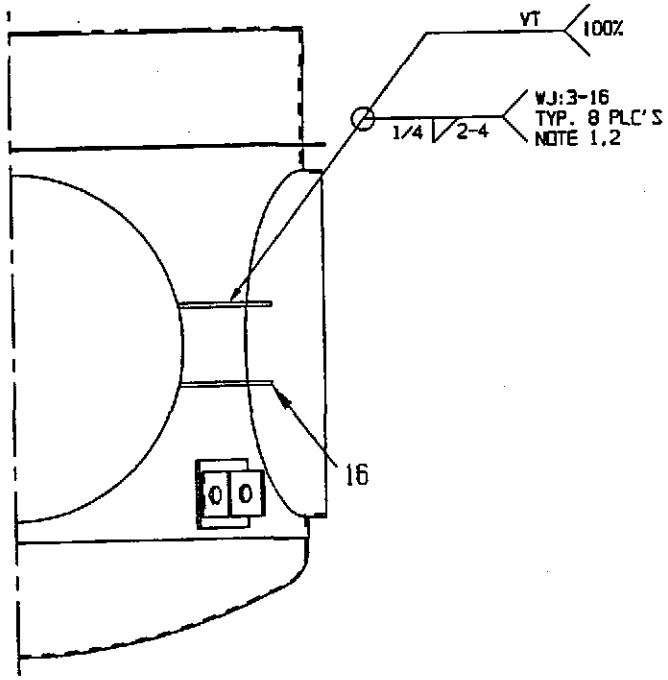

ASSEMBLY NUMBER	LOCATION NUMBER	WELD JOINT	TACKING RECORD: WELDER I.D.	TACKING RECORD: FILLER METAL HEAT/LOT NO.	TACKING RECORD: PROC.	WELD JOINT RECORD: WELDER I.D.	WELD JOINT RECORD: FILLER METAL HEAT/LOT NO.	WELD JOINT RECORD: PROC.	REPAIR RECORD: REPAIR WELDER	REPAIR RECORD: WELD REPAIR FILLER MET.	REPAIR RECORD: PROC.
1	1	3-16	O	S437864	T2	LL/P/W	5437864 S710840	T2/T1			
1	2	3-16	O	S437864	T2	LL/P/W	5437864 S710840	T2/T1			
1	3	3-16	O	S437864	T2	LL/P/W	5437864 S710840	T2/T1			
1	4	3-16	O	S437864	T2	LL/P/W	5437864 S710840	T2/T1			
1	5	3-16	O	S437864	T2	LL/P/W	5437864 S710840	T2/T1			
1	6	3-16	O	S437864	T2	LL/P/W	5437864 S710840	T2/T1			
1	7	3-16	O	S437864	T2	LL/P/W	5437864 S710840	T2/T1			
1	8	3-16	O	S437864	T2	LL/P/W	5437864 S710840	T2/T1			

RANOR, INC

SERIAL NO. 9

WELD MAP/WELD JOINT IDENTIFICATION SHEET

WELD MAP PAGE	CUSTOMER	CUST P.O.	JOB NO.	LEVEL NO.
4A CON'T 4B	PROCESS SYSTEMS	555822-00	7300 F/M	1

DESCRIPTION: LOWER SHELL SUBASSEMBLY
DWG. No. V049-4-003

MATERIAL: 304L S/S

WELDING PROCESS:	GMAW	GTAW	FCAW	SMAW	SAW
WELD PROCEDURES	G1	T1 P-P8-P8-2 REV.0	F1	M1	S1
	G2	T2 T-P8-P8-PSI REV.0	F2	M2	S2
	G3	T3	F3	M3	S3
FILLER METAL					

PREPARED BY: DJH 9-16-96 | APPROVED BY: | W/M REV. -

WELDING NOTES:
1. GTAW WELD FROM BEVEL SIDE
2. GTAW WASH BACKSIDE AS REQUIRED.

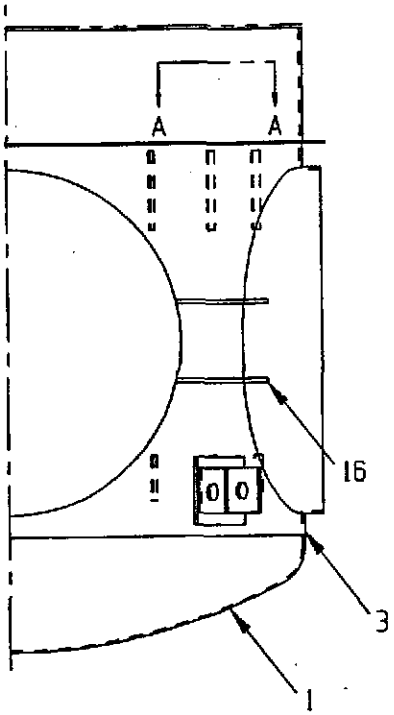

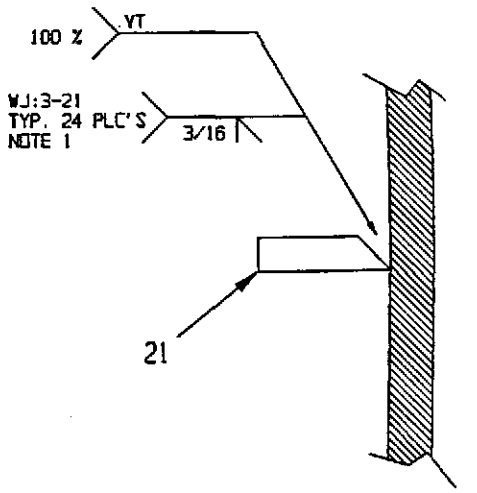

SECTION A-A

ASSEMBLY NUMBER	LOCATION NUMBER	WELD JOINT	TACKING RECORD: WELDER I.D.	TACKING RECORD: FILLER METAL HEAT/LOT NO.	TACKING RECORD: PROC.	WELD JOINT RECORD: WELDER I.D.	WELD JOINT RECORD: FILLER METAL HEAT/LOT NO.	WELD JOINT RECORD: PROC.	REPAIR RECORD: REPAIR WELDER	REPAIR RECORD: WELD REPAIR FILLER MET.	REPAIR RECORD: PROC.
1	1	3-21	O	S437864	T2	LL P	S437864 S710840	T2			
1	2	3-21	O	S437864	T2	LL P	S437864 S710840	T2			
1	3	3-21	O	S437864	T2	LL P	S437864 S710840	T2			
1	4	3-21	O	S437864	T2	LL P	S437864 S710840	T2			
1	5	3-21	O	S437864	T2	LL P	S437864 S710840	T2			
1	6	3-21	O	S437864	T2	LL P	S437864 S710840	T2			
1	7	3-21	O	S437864	T2	LL P	S437864 S710840	T2			
1	8	3-21	O	S437864	T2	LL P	S437864 S710840	T2			

RANOR, INC

SERIAL NO. 9

WELD MAP/WELD JOINT IDENTIFICATION SHEET

WELD MAP PAGE	CUSTOMER	CUST P.O.	JOB NO.	LEVEL NO.
4B CON'T 5	PROCESS SYSTEMS	555822-00	7300 F/M	1

DESCRIPTION LOWER SHELL ASSEMBLY
DWG. No. V049-4-003

MATERIAL 304L S/S

WELDING PROCESS:	GMAW		GTAW		FCAW		SMAW		SAW	
WELD PROCEDURES	G1		T1	P-P8-P8-2 REV.0	F1		M1		S1	
	G2		T2	T-P8-P8-PSI REV.0	F2		M2		S2	
	G3		T3		F3		M3		S3	
FILLER METAL										

PREPARED BY: DJH 9-16-96 | APPROVED BY: | W/M REV. -

ASSEMBLY NUMBER	LOCATION NUMBER	WELD JOINT	TACKING RECORD			WELD JOINT RECORD				REPAIR RECORD		
			WELDER I.D.	FILLER METAL HEAT/LOT NO.	PROC.	WELDER I.D.		FILLER METAL HEAT/LOT NO.	PROC.	REPAIR WELDER	WELD REPAIR FILLER MET.	PROC.
1	9	3-21	O	5437864	T2	LL	P	5437864 S710840	T2			
1	10	3-21	O	5437864	T2	LL	P	5437864 S710840	T2			
1	11	3-21	O	5437864	T2	LL	P	5437864 S710840	T2			
1	12	3-21	O	5437864	T2	LL	P	5437864 S710840	T2			
1	13	3-21	O	5437864	T2	LL	P	5437864 S710840	T2			
1	14	3-21	O	5437864	T2	LL	P	5437864 S710840	T2			
1	15	3-21	O	5437864	T2	LL	P	5437864 S710840	T2			
1	16	3-21	O	5437864	T2	LL	P	5437864 S710840	T2			
1	17	3-21	O	5437864	T2	LL	P	5437864 S710840	T2			
1	18	3-21	O	5437864	T2	LL	P	5437864 S710840	T2			
1	19	3-21	O	5437864	T2	LL	P	5437864 S710840	T2			
1	20	3-21	O	5437864	T2	LL	P	5437864 S710840	T2			
1	21	3-21	O	5437864	T2	LL	P	5437864 S710840	T2			
1	22	3-21	O	5437864	T2	LL	P	5437864 S710840	T2			
1	23	3-21	O	5437864	T2	LL	P	5437864 S710840	T2			
1	24	3-21	O	5437864	T2	LL	P	5437864 S710840	T2			
			~~O~~									
			~~O~~									
			~~O~~									

RANOR, INC

SERIAL NO. 9

WELD MAP/WELD JOINT IDENTIFICATION SHEET

WELD MAP PAGE	CUSTOMER	CUST P.O.	JOB NO.	LEVEL NO.
5A CON'T 5B	PROCESS SYSTEMS	555822-00	7300 F/M	1

DESCRIPTION LOWER SHELL SUBASSEMBLY
DWG. No. V049-4-003

MATERIAL 304L S/S

WELDING PROCESS:	GMAW		GTAW		FCAW		SMAW		SAW	
WELD PROCEDURES	G1		T1	P-P8-P8-2 REV.0	F1		M1		S1	
	G2		T2	T-P8-P8-PSI REV.0	F2		M2		S2	
	G3		T3		F3		M3		S3	
FILLER METAL										

PREPARED BY: DJH 9-16-96 | APPROVED BY: | W/M REV. -

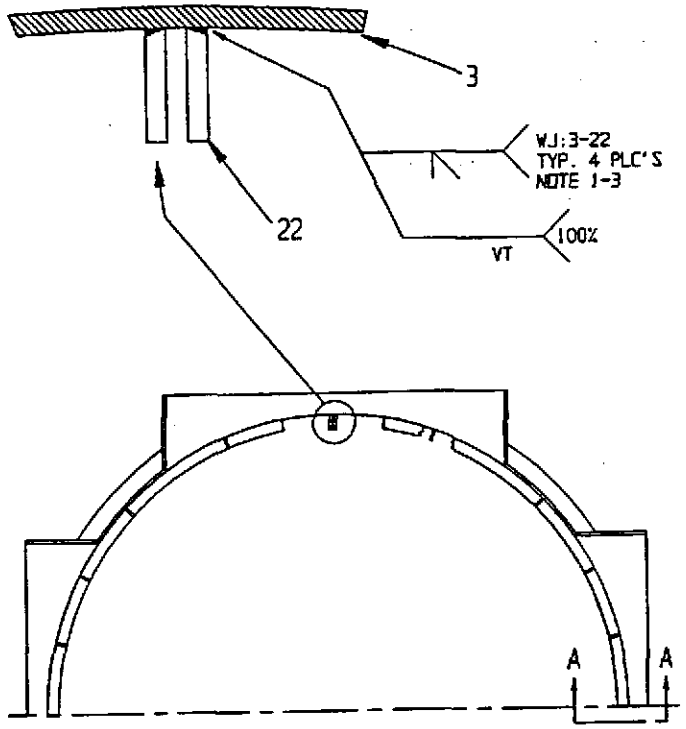

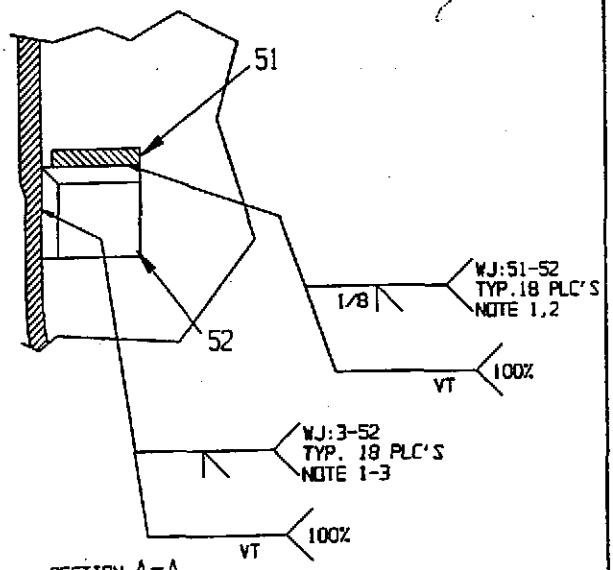

SECTION A-A

NOTE:
1. TIG WELD FROM THE BEVEL SIDE
2. TIG WASH BACKSIDE AS REQUIRED.
3. WELDS TO BE FULL PENETRATION

ASSEMBLY NUMBER	LOCATION NUMBER	WELD JOINT	TACKING RECORD			WELD JOINT RECORD			REPAIR RECORD		
			WELDER I.D.	FILLER METAL HEAT/LOT NO.	PROC.	WELDER I.D.	FILLER METAL HEAT/LOT NO.	PROC.	REPAIR WELDER	WELD REPAIR FILLER MET.	PROC.
1	1	3-22	P	5437864	T2	LL/P	5437864 5710840	T2			
1	2	3-22	P	5437864	T2	LL/P	5437864 5710840	T2			
1	3	3-22	P	5437864	T2	LL/P	5437864 5710840	T2			
1	4	3-22	P	5437864	T2	LL/P	5437864 5710840	T2			
1	1	3-52	P	5437864	T2	LL/P	5437864 5710840	T2/T1			
1	2	3-52	P	5437864	T2	LL/P	5437864 5710840	T2/T1			
1	3	3-52	P	5437864	T2	LL/P	5437864 5710840	T2/T1			
1	4	3-52	P	5437864	T2	LL/P	5437864 5710840	T2/T1			

RANOR, INC

SERIAL NO. 9

WELD MAP/WELD JOINT IDENTIFICATION SHEET

WELD MAP PAGE	CUSTOMER	CUST P.O.	JOB NO.	LEVEL NO.
5B CON'T 5C	PROCESS SYSTEMS	555822-00	7300 F/M	1

DESCRIPTION	MATERIAL
LOWER SHELL ASSEMBLY DWG. No. V049-4-003	304L S/S

WELDING PROCESS:	GMAW	GTAW	FCAW	SMAW	SAW
WELD PROCEDURES	G1	T1 P-P8-P8-2 REV.0	F1	M1	S1
	G2	T2 T-P8-P8-PSI REV.0	F2	M2	S2
	G3	T3	F3	M3	S3
FILLER METAL					

PREPARED BY:	APPROVED BY:	W/M REV.
DJH 9-16-96		-

ASSEMBLY NUMBER	LOCATION NUMBER	WELD JOINT	TACKING RECORD			WELD JOINT RECORD			REPAIR RECORD		
			WELDER I.D.	FILLER METAL HEAT/LOT NO.	PROC.	WELDER I.D.	FILLER METAL HEAT/LOT NO.	PROC.	REPAIR WELDER	WELD REPAIR FILLER MET.	PROC.
1	5	3-52	P	5437864	T2	LL/P	5437864 S710840	T2/T1			
1	6	3-52	P	5437864	T2	LL/P	5437864 S710840	T2/T1			
1	7	3-52	P	5437864	T2	LL/P	5437864 S710840	T2/T1			
1	8	3-52	P	5437864	T2	LL/P	5437864 S710840	T2/T1			
1	9	3-52	P	5437864	T2	LL/P	5437864 S710840	T2/T1			
1	10	3-52	P	5437864	T2	LL/P	5437864 S710840	T2/T1			
1	11	3-52	P	5437864	T2	LL/P	5437864 S710840	T2/T1			
1	12	3-52	P	5437864	T2	LL/P	5437864 S710840	T2/T1			
1	13	3-52	P	5437864	T2	LL/P	5437864 S710840	T2/T1			
1	14	3-52	P	5437864	T2	LL/P	5437864 S710840	T2/T1			
1	15	3-52	P	5437864	T2	LL/P	5437864 S710840	T2/T1			
1	16	3-52	P	5437864	T2	LL/P	5437864 S710840	T2/T1			
1	17	3-52	P	5437864	T2	LL/P	5437864 S710840	T2/T1			
1	18	3-52	P	5437864	T2	LL/P	5437864 S710840	T2/T1			
1	1	51-52	O	5437864	T2	W	5437864	T2			
1	2	51-52	O	5437864	T2	W	5437864	T2			
1	3	51-52	O	5437864	T2	W	5437864	T2			
1	4	51-52	O	5437864	T2	W	5437864	T2			
1	5	51-52	O	5437864	T2	W	5437864	T2			
1	6	51-52	O	5437864	T2	W	5437864	T2			
1	7	51-52	O	5437864	T2	W	5437864	T2			
1	8	51-52	O	5437864	T2	W	5437864	T2			
1	9	51-52	O	5437864	T2	W	5437864	T2			
1	10	51-52	O	5437864	T2	W	5437864	T2			
1	11	51-52	O	5437864	T2	W	5437864	T2			

RANOR, INC

SERIAL NO. 9

WELD MAP/WELD JOINT IDENTIFICATION SHEET

WELD MAP PAGE	CUSTOMER	CUST P.O.	JOB NO.	LEVEL NO.
5C CON'T 6	PROCESS SYSTEMS	555822-00	7300 F/M	1

DESCRIPTION	MATERIAL
LOWER SHELL ASSEMBLY DWG. No. V049-4-003	304L S/S

WELDING PROCESS:	GMAW		GTAW		FCAW		SMAW		SAW	
WELD PROCEDURES	G1		T1	P-P8-P8-2 REV.0	F1		M1		S1	
	G2		T2	T-P8-P8-PSI REV.0	F2		M2		S2	
	G3		T3		F3		M3		S3	
FILLER METAL										

PREPARED BY:	APPROVED BY:	W/M REV.
DJH 9-16-96		-

ASSEMBLY NUMBER	LOCATION NUMBER	WELD JOINT	TACKING RECORD			WELD JOINT RECORD			REPAIR RECORD		
			WELDER I.D.	FILLER METAL HEAT/LOT NO.	PROC.	WELDER I.D.	FILLER METAL HEAT/LOT NO.	PROC.	REPAIR WELDER	WELD REPAIR FILLER MET.	PROC.
1	12	51-52	O	5437864	T2	W	5437864	T2			
1	13	51-52	O	5437864	T2	W	5437864	T2			
1	14	51-52	O	5437864	T2	W	5437864	T2			
1	15	51-52	O	5437864	T2	W	5437864	T2			
1	16	51-52	O	5437864	T2	W	5437864	T2			
1	17	51-52	O	5437864	T2	W	5437864	T2			
1	18	51-52	O	5437864	T2	W	5437864	T2			

RANOR, INC

SERIAL NO. 9

WELD MAP/WELD JOINT IDENTIFICATION SHEET

WELD MAP PAGE	CUSTOMER	CUST P.O.	JOB NO.	LEVEL NO.
6A CON'T 6B	PROCESS SYSTEMS	555822-00	7300 F/M	1

DESCRIPTION: LOWER SHELL SUBASSEMBLY
DWG. No. V049-4-003

MATERIAL: 304L S/S

WELDING PROCESS:	GMAW	GTAW	FCAW	SMAW	SAW
WELD PROCEDURES	G1	T1 P-P8-P8-1 REV.0	F1	M1	S1
	G2	T2 T-P8-P8-PSI REV.0	F2	M2	S2
	G3	T3	F3	M3	S3
FILLER METAL					

PREPARED BY: DJH 9-16-96 | APPROVED BY: | W/M REV. _

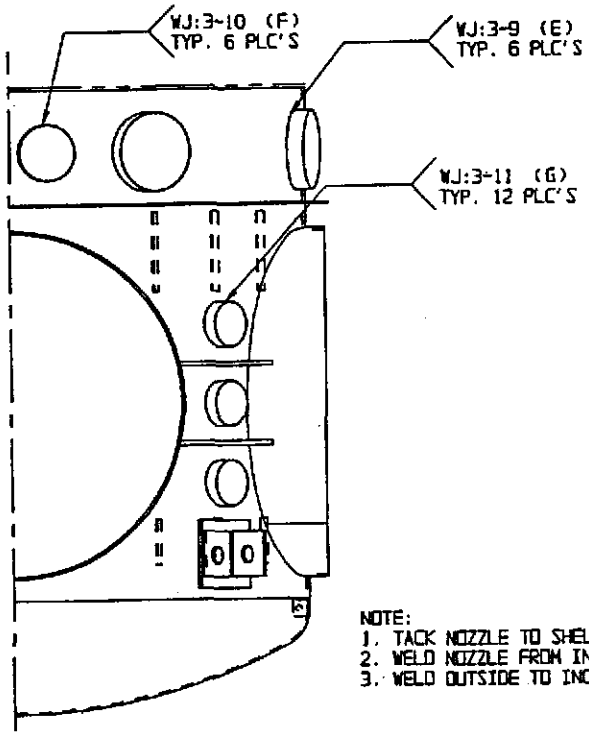

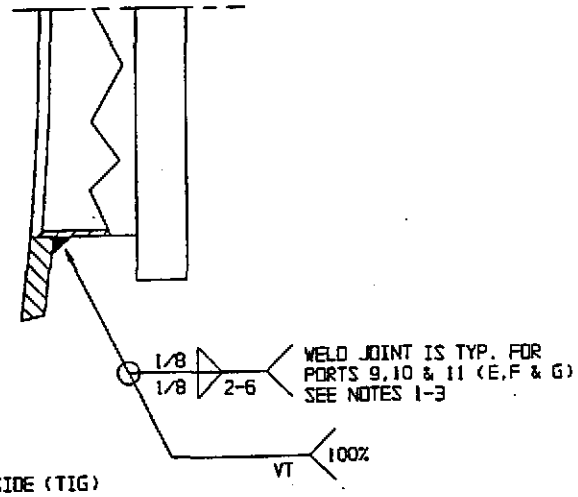

NOTE:
1. TACK NOZZLE TO SHELL FROM OUTSIDE (TIG)
2. WELD NOZZLE FROM INSIDE (TIG)
3. WELD OUTSIDE TO INCLUDE TACKS (TIG)

ASSEMBLY NUMBER	LOCATION NUMBER	WELD JOINT	TACKING RECORD: WELDER I.D.	TACKING RECORD: FILLER METAL HEAT/LOT NO.	TACKING RECORD: PROC.	WELD JOINT RECORD: WELDER I.D.	WELD JOINT RECORD: FILLER METAL HEAT/LOT NO.	WELD JOINT RECORD: PROC.	REPAIR RECORD: REPAIR WELDER	REPAIR RECORD: WELD REPAIR FILLER MET.	REPAIR RECORD: PROC.
1	1	3-10	O	5437864	T2	P	5437864	T2			
1	2	3-10	O	5437864	T2	P	5437864	T2			
1	3	3-10	O	5437864	T2	P	5437864	T2			
1	4	3-10	O	5437864	T2	P	5437864	T2			
1	5	3-10	O	5437864	T2	P	5437864	T2			
1	6	3-10	O	5437864	T2	P	5437864	T2			
1	1	3-11	O	5437864	T2	P	5437864	T2			
1	2	3-11	O	5437864	T2	P	5437864	T2			

RANOR, INC SERIAL NO. 9

WELD MAP/WELD JOINT IDENTIFICATION SHEET

WELD MAP PAGE	CUSTOMER	CUST P.O.	JOB NO.	LEVEL NO.
6B CON'T 7	PROCESS SYSTEMS	555822-00	7300 F/M	1

DESCRIPTION **LOWER SHELL ASSEMBLY** DWG. No. V049-4-003

MATERIAL 304L S/S

WELDING PROCESS:	GMAW	GTAW	FCAW	SMAW	SAW
WELD PROCEDURES	G1	T1 P-P8-P8-1 REV.0	F1	M1	S1
	G2	T2 T-P8-P8-PSI REV.0	F2	M2	S2
	G3	T3	F3	M3	S3
FILLER METAL					

PREPARED BY: DJH 9-16-96 APPROVED BY: W/M REV. -

ASSEMBLY NUMBER	LOCATION NUMBER	WELD JOINT	TACKING RECORD			WELD JOINT RECORD			REPAIR RECORD		
			WELDER I.D.	FILLER METAL HEAT/LOT NO.	PROC.	WELDER I.D.	FILLER METAL HEAT/LOT NO.	PROC.	REPAIR WELDER	WELD REPAIR FILLER MET.	PROC.
1	3	3-11	O	5437864	T2	P	5437864	T2			
1	4	3-11	O	5437864	T2	P	5437864	T2			
1	5	3-11	O	5437864	T2	P	5437864	T2			
1	6	3-11	O	5437864	T2	P	5437864	T2			
1	7	3-11	O	5437864	T2	P	5437864	T2			
1	8	3-11	O	5437864	T2	P	5437864	T2			
1	12	3-11	O	5437864	T2	P	5437864	T2			
1	1	3-9	O	5437864	T2	P	5437864	T2			
1	2	3-9	O	5437864	T2	P	5437864	T2			
1	3	3-9	O	5437864	T2	P	5437864	T2			
1	4	3-9	O	5437864	T2	P	5437864	T2			
1	5	3-9	O	5437864	T2	P	5437864	T2			
1	6	3-9	O	5437864	T2	P	5437864	T2			

RANOR, INC

SERIAL NO. 9

WELD MAP/WELD JOINT IDENTIFICATION SHEET

WELD MAP PAGE	CUSTOMER	CUST P.O.	JOB NO.	LEVEL NO.
7 CON'T 8	PROCESS SYSTEMS	555822-00	7300 F/M	1

DESCRIPTION **LOWER SHELL SUBASSEMBLY** DWG. No. V049-4-003

MATERIAL 304L S/S

WELDING PROCESS:	GMAW		GTAW		FCAW		SMAW		SAW	
WELD PROCEDURES	G1		T1	P-P8-P8-1 REV.0	F1		M1		S1	
	G2		T2	T-P8-P8-PSI REV.0	F2		M2		S2	
	G3		T3		F3		M3		S3	
FILLER METAL										

PREPARED BY: DJH 9-16-96 | APPROVED BY: | W/M REV. _

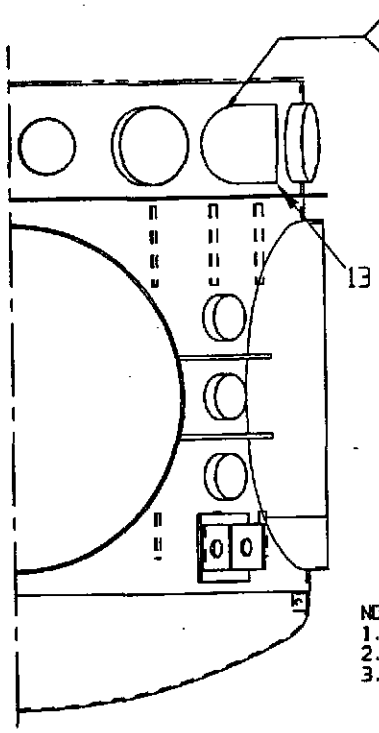

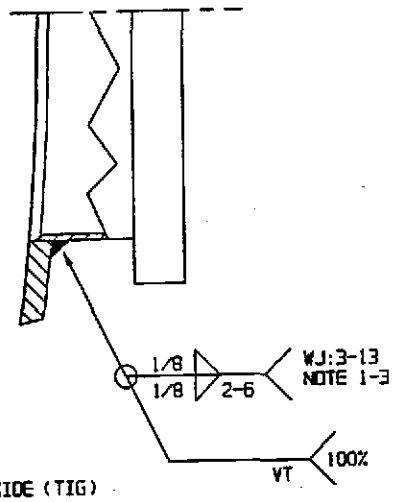

NOTE:
1. TACK NOZZLE TO SHELL FROM OUTSIDE (TIG)
2. WELD NOZZLE FROM INSIDE (TIG)
3. WELD OUTSIDE TO INCLUDE TACKS (TIG)

ASSEMBLY NUMBER	LOCATION NUMBER	WELD JOINT	TACKING RECORD			WELD JOINT RECORD			REPAIR RECORD		
			WELDER I.D.	FILLER METAL HEAT/LOT NO.	PROC.	WELDER I.D.	FILLER METAL HEAT/LOT NO.	PROC.	REPAIR WELDER	WELD REPAIR FILLER MET.	PROC.
1	1	3-13	W	5Y37864	T2	LL	5710840	T2			
1	2	3-13	W	5Y37864	T2	LL	5710840	T2			
1	3	3-13	W	5Y37864	T2	LL	5710840	T2			
1	4	3-13	W	5Y37864	T2	LL	5710840	T2			

RANOR, INC

SERIAL NO. 9

WELD MAP/WELD JOINT IDENTIFICATION SHEET

WELD MAP PAGE	CUSTOMER	CUST P.O.	JOB NO.	LEVEL NO.
8 CON'T 9	PROCESS SYSTEMS	555822-00	7300 F/M	1

DESCRIPTION LOWER SHELL SUBASSEMBLY
DWG. No. V049-4-003

MATERIAL 304L S/S

WELDING PROCESS:	GMAW		GTAW		FCAW		SMAW		SAW	
WELD PROCEDURES	G1		T1	P-P8-P8-1 REV.0	F1		M1		S1	
	G2		T2	T-P8-P8-PSI REV.0	F2		M2		S2	
	G3		T3		F3		M3		S3	
FILLER METAL										

PREPARED BY: DJH 9-16-96 | APPROVED BY: | W/M REV. -

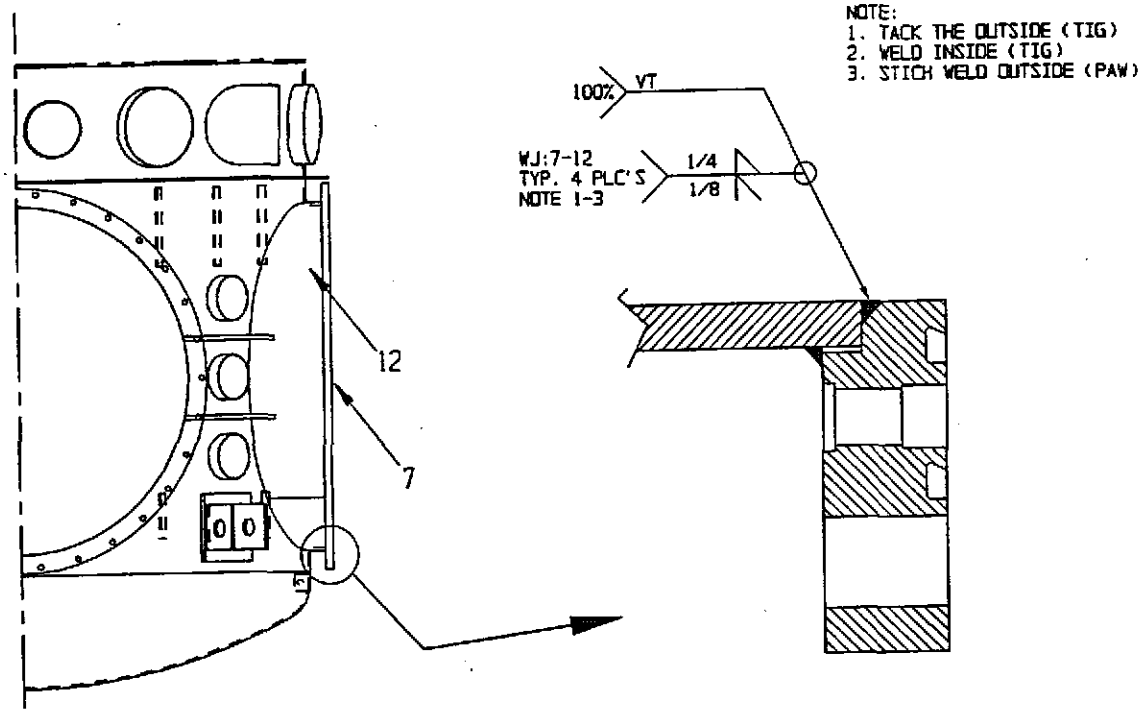

ASSEMBLY NUMBER	LOCATION NUMBER	WELD JOINT	TACKING RECORD WELDER I.D.	TACKING RECORD FILLER METAL HEAT/LOT NO.	TACKING RECORD PROC.	WELD JOINT RECORD WELDER I.D.	WELD JOINT RECORD FILLER METAL HEAT/LOT NO.	WELD JOINT RECORD PROC.	REPAIR RECORD REPAIR WELDER	REPAIR RECORD WELD REPAIR FILLER MET.	REPAIR RECORD PROC.
1	1	7-12	P	5437864	T2	LL	5437864 5710840	T2			
1	2	7-12	P	5437864	T2	LL	5437864 5710840	T2			
1	3	7-12	P	5437864	T2	LL	5437864 5710840	T2			
1	4	7-12	P	5437864	T2	LL	5437864 5710840	T2			

RANOR, INC

SERIAL NO. 9

WELD MAP/WELD JOINT IDENTIFICATION SHEET

WELD MAP PAGE	CUSTOMER	CUST P.O.	JOB NO.	LEVEL NO.
9 CON'T 10	PROCESS SYSTEMS	555822-00	7300 F/M	1

DESCRIPTION **LOWER SHELL SUBASSEMBLY**
DWG. No. V049-4-003

MATERIAL 304L S/S

WELDING PROCESS:	GMAW	GTAW	FCAW	SMAW	SAW
WELD PROCEDURES	G1	T1 P-P8-P8-1 REV.0	F1	M1	S1
	G2	T2 T-P8-P8-PSI REV.0	F2	M2	S2
	G3	T3	F3	M3	S3
FILLER METAL					

PREPARED BY: DJH 9-16-96

APPROVED BY:

W/M REV. _

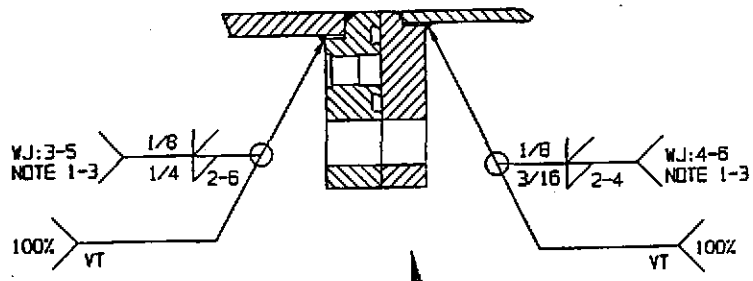

NOTE:
1. TACK THE OUTSIDE (TIG)
2. WELD THE INSIDE (TIG)
3. STICH WELD THE OUTSIDE (PAW)

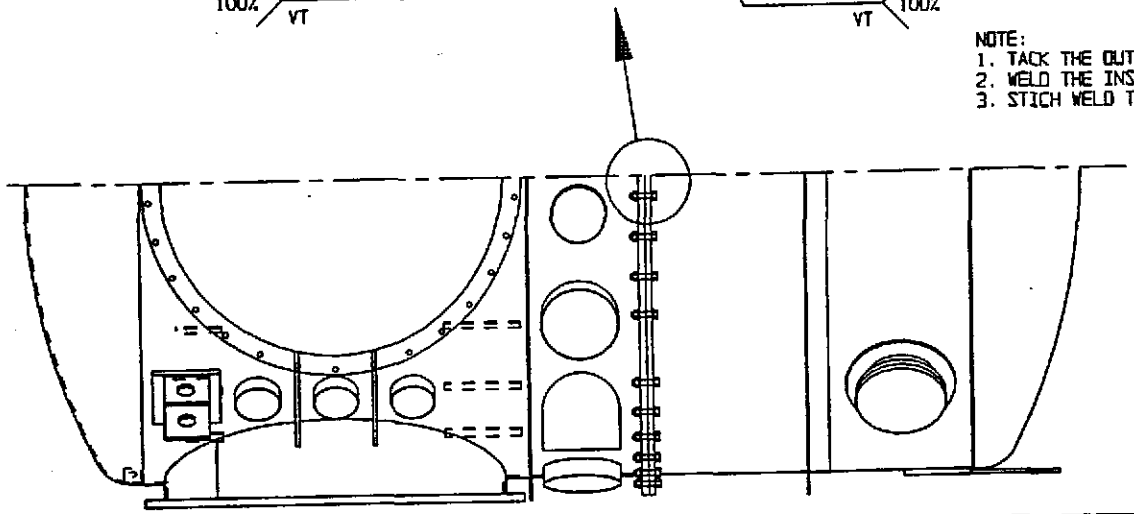

ASSEMBLY NUMBER	LOCATION NUMBER	WELD JOINT	TACKING RECORD			WELD JOINT RECORD			REPAIR RECORD		
			WELDER I.D.	FILLER METAL HEAT/LOT NO.	PROC.	WELDER I.D.	FILLER METAL HEAT/LOT NO.	PROC.	REPAIR WELDER	WELD REPAIR FILLER MET.	PROC.
1	1	3-5	W	543784	T2	P	543784	T2			
1	1	4-6	W	543784	T2	W	543784	T2			

RANOR, INC

S/N: 9

INSPECTION/NONDESTRUCTIVE EXAMINATION RECORD

WELD MAP	CUSTOMER:	CUSTOMER PO:	JOB NO.:	LEVEL NO.:
10 CONT. –	PROCESS SYSTEMS INT.	555822-00	7300 F/M	1

DESCRIPTION:	MATERIAL:
LOWER SHELL ASSEMBLY; DWG NO. V049-4-003	304L S/S

PREPARED BY	APPROVED BY:	WELD MAP REV.:
DJH 6-17-96		—

VISUAL EXAMINATION REPORT - PROCEDURE NO. RQCP-25, REV. 4

AREA EXAMINED: ☐ ROOT ☒ FINAL ☐ BEVELED EDGES
SURFACE CONDITION: ☒ AS-WELDED ☐ GROUND ☐ MACHINED

	WELD JOINT NUMBER	WJ:3-20 4 PLC'S	WJ:1-3	WJ:3-15	WJ:3-12 4 PLC'S	WJ:3-16 8 PLC'S	WJ:3-21 21 PLC'S	WJ:3-22 4 PLC'S	WJ:3-52 18 PLC'S	WJ:51-52 18 PLC'S
	NDE EXAMINER LEVEL DATE	JPM III 5-2-97	JPM III 5-2-97	JPM III 5-2-97	JPM III 5-2-97	JPM III 5-2-97	RJE II 6/4/97	JPM III 5-2-97	JPM III 5-2-97	JPM III 5-2-97
	CUSTOMER QUALITY REP. DATE									
Cracks		–	–	–	–	–	–	–	–	–
Fusion		OK	OK	OK	OK	2	4	OK	OK	OK
Crater Filled to Full Cross-section of Weld		OK	OK	OK	OK	1	OK	OK	OK	OK
Weld Profile		OK	OK	OK	OK	1	OK	OK	OK	OK
Undercut		OK	OK	OK	OK	OK	3	OK	OK	OK
Piping Porosity		OK	OK	OK	OK	OK	OK	OK	OK	OK
Fillet Weld Size		OK	N/A	OK	OK	OK	OK	N/A	N/A	N/A
Visual Indications After Repair		0	0	0	0	0	0	0	0	0
Final Weld Joint Acceptance		Accept	Accept	Accept	Accept	Accept	Accept	Accept	Accept	Accept

VISUAL EXAMINATION REPORT - PROCEDURE NO. RQCP-25, REV. 4

AREA EXAMINED: ☐ ROOT ☒ FINAL ☐ BEVELED EDGES
SURFACE CONDITION: ☒ AS-WELDED ☐ GROUND ☐ MACHINED

	WELD JOINT NUMBER	WJ:3-10 6 PLC'S	WJ:3-11 12 PLC'S	WJ:3-9 6 PLC'S	WJ:3-13 4 PLC'S	WJ:7-12 4 PLC'S	WJ:3-5	WJ:4-6		
	NDE EXAMINER LEVEL DATE	RJE II 6/17/97	RJE II 6/4/97	RJE II 6/17/97	RJE II 6/18/97	RJE II 6/17/97	RJE II 6/17/97	RJE II 6/17/97		
	CUSTOMER QUALITY REP. DATE									
Cracks		—	—	—	—	—	—	—		
Fusion		OK	OK	OK	OK	OK	OK	OK		
Crater Filled to Full Cross-section of Weld		OK	OK	OK	OK	OK	OK	OK		
Weld Profile		OK	OK	OK	OK	OK	OK	OK		
Undercut		8	20	7	3	10	1	OK		
Piping Porosity		OK	OK	OK	OK	OK	OK	OK		
Fillet Weld Size		OK	OK	OK	OK	OK	OK	OK		
Visual Indications After Repair		0	0	0	0	0	0	—		
Final Weld Joint Acceptance		Accept	Accept	Accept	Accept	Accept	Accept	Accept		

NDE Examiner: _____ Level: II Date: 6-26-97

PRODUCTION

RANOR, INC

NONCONFORMANCE REPORT

FORM QA 12.1 REV. 6 (07/30/96)

NCR NUMBER	PAGE 1 OF 3
NCR- 1058	SKETCH ATTACHED ☒

JOB NUMBER	CUSTOMER	PURCHASE ORDER NUMBER	QUANTITY
7300 F/M	P.S.I.	555822-00	1

PART DESCRIPTION	DOCUMENT NUMBER AND REVISION	SERIAL NUMBER
BSC SHELL	V0419-4-003 REV-3	003-09

CODE/SPECIFICATION: ☐ ASME SECTION III ☐ SAFETY RELATED ☐ ASME SECTION VIII ☐ MIL SPEC ☒ COMMERCIAL

DESCRIPTION OF NONCONFORMANCE

ITEM	REQUIREMENT	NONCONFORMANCE
1	NOTE: 11 MIN WALL THK	PLEASE SEE SKETCH FOR
	0.375	DETAILS.

REMARKS:

ROUTING SHEET IDENTIFIED WITH NCR NO. AND DATE OF ISSUE: BY [signature] DATE: 6-13-97

ORIGINATOR/INSPECTOR: [signature] DATE: 6-13-97

RESPONSIBILITY FOR NONCONFORMANCE

☐ VENDOR ☐ DESIGN ☐ MATERIAL ☐ CUTTING ☐ FORMING ☐ WELDING
☐ MACHINING ☐ INSPECTION ☐ CALIBRATION ☐ QC ☐ QA ☒ OTHER _____

TECHNICAL JUSTIFICATION/DESCRIPTION OF DISPOSITION

ITEM	TECHNICAL JUSTIFICATION	DESCRIPTION OF DISPOSITION
1	SUBMIT TO PSI FOR TECH	
	JUSTIFICATION WITH A DISPOSITION.	
	A. NL 6.13.97	

TECHNICAL JUSTIFICATION: BY _____ DATE: _____

DISPOSITION: BY _____ DATE: _____

DISPOSITION OF NONCONFORMANCE:	RECOMMENDED DISPOSITION:	10CFR21 EVALUATION REQUIRED: ☐ YES ☒ NO
☐ ACCEPT AS IS ☐ USE AS IS	☐ ACCEPTED	CORRECTIVE ACTION REQUIRED: ☐ YES ☒ NO
☐ REPAIR /REWORK ☐ REJECT	☐ NOT ACCEPTED	CUSTOMER APPROVAL REQUIRED: ☒ YES ☐ NO
CONDITIONAL RELEASE: CR NO. _____		APPROVED BY: [signature] DATE 6-13-97

APPROVAL OF DISPOSITION:		VERIFICATION OF DISPOSITION:	
VP-ENGINEERING	DATE	ACCEPTED BY	DATE
QA MANAGER	DATE	QA MANAGER	DATE
ANI	DATE	ANI	DATE

NCR# 1058 2/3

DEGREE 0°

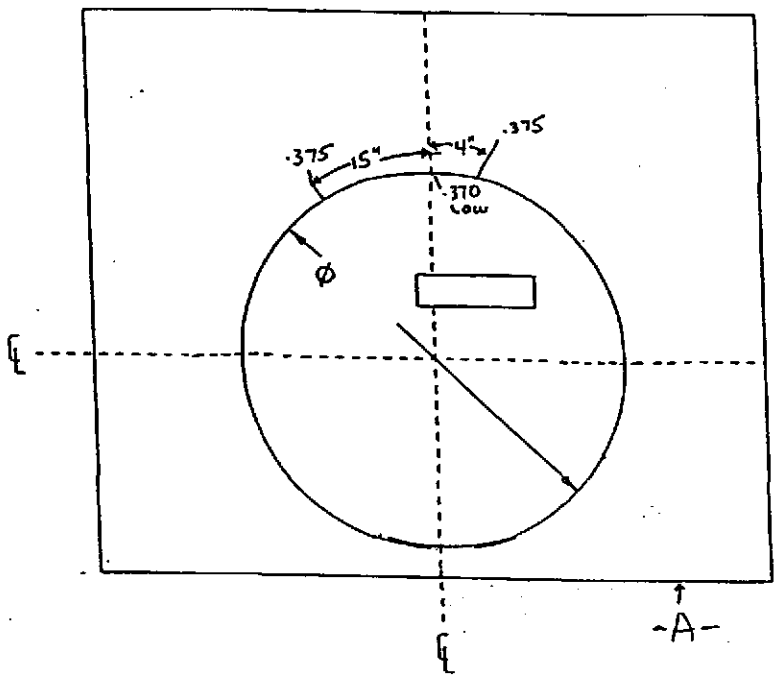

DEGREE 90°

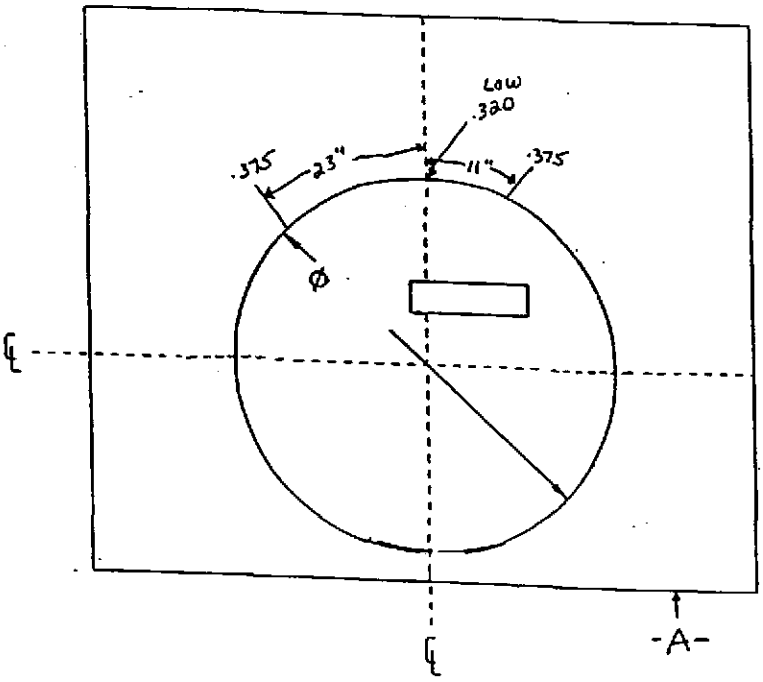

3 of 3

NCR # 1058

DEGREE 180°

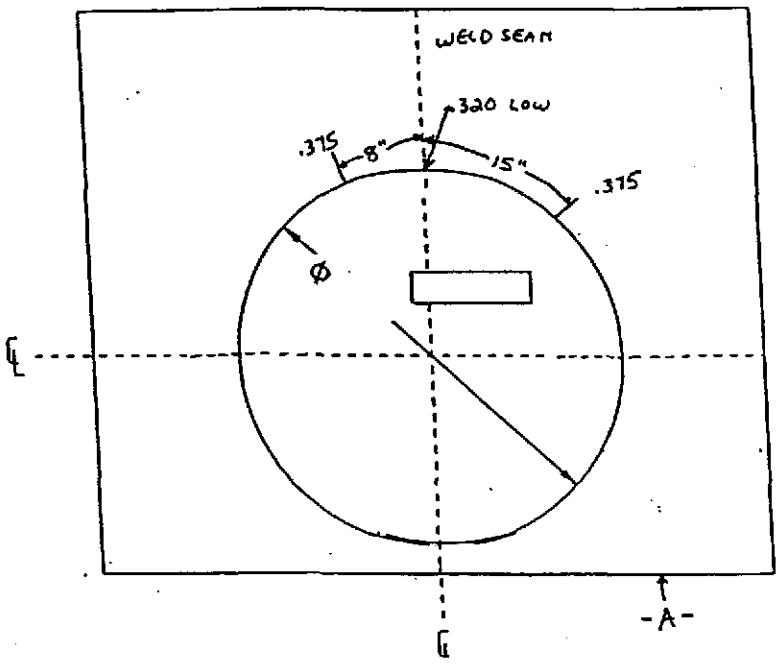

DEGREE 270°

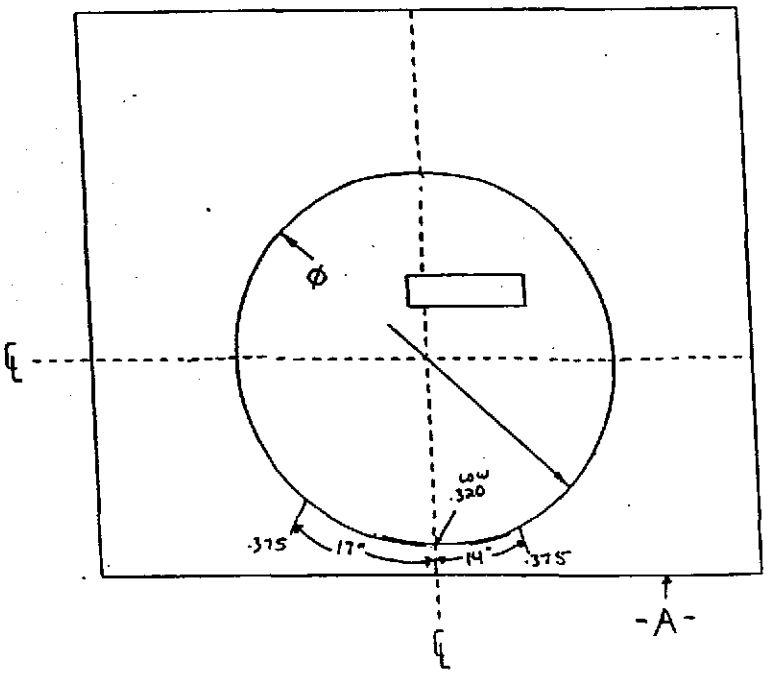

RANOR, INC

NONCONFORMANCE REPORT

FORM QA 12.1 REV. 6 (07/30/96)

NCR NUMBER	PAGE 1 OF 3
NCR- 1063	SKETCH ATTACHED ☒

JOB NUMBER	CUSTOMER	PURCHASE ORDER NUMBER	QUANTITY
7300 Flm	P.S.I.	555822-00	1

PART DESCRIPTION	DOCUMENT NUMBER AND REVISION	SERIAL NUMBER
BSC SHELL	V049-4-003 REV-3	003-09

CODE/SPECIFICATION: ☐ ASME SECTION III ☐ SAFETY RELATED ☐ ASME SECTION VIII ☐ MIL SPEC ☒ COMMERCIAL

DESCRIPTION OF NONCONFORMANCE

ITEM	REQUIREMENT	NONCONFORMANCE
1 *	48.414 ± .045 ZONE B-8	48.383 +.012 -.002 48.393 48.418 90° R.S, 48.415 270° R.S.
2	96.875 ± .10 ZONE B-8	96.765 min -.010 270°
3	⊥ | .030 | A | ZONE B-5	0.013 +.013
4	⊥ | .030 | B | ZONE D-7	0.033 +.003
*	ITEM #1 CONTINUED	48.372 48.396 -.023 270°.

REMARKS: PLEASE REFERENCE WORK SHEETS FOR ACTUAL DETAIL LOCATIONS *

ROUTING SHEET IDENTIFIED WITH NCR NO. AND DATE OF ISSUE: BY _____ DATE: 6-24-97

ORIGINATOR/INSPECTOR: _____ DATE: 6-24-97

RESPONSIBILITY FOR NONCONFORMANCE

☐ VENDOR	☐ DESIGN	☐ MATERIAL	☐ CUTTING	☐ FORMING	☒ WELDING
☒ MACHINING	☐ INSPECTION	☐ CALIBRATION	☐ QC	☐ QA	☒ OTHER _____

TECHNICAL JUSTIFICATION/DESCRIPTION OF DISPOSITION

ITEM	TECHNICAL JUSTIFICATION	DESCRIPTION OF DISPOSITION

TECHNICAL JUSTIFICATION: BY _____ DATE: _____

DISPOSITION: BY _____ DATE: _____

DISPOSITION OF NONCONFORMANCE:	RECOMMENDED DISPOSITION:	10CFR21 EVALUATION REQUIRED: ☐ YES ☐ NO
☐ ACCEPT AS IS ☐ USE AS IS	☐ ACCEPTED	CORRECTIVE ACTION REQUIRED: ☐ YES ☐ NO
☐ REPAIR /REWORK ☐ REJECT	☐ NOT ACCEPTED	CUSTOMER APPROVAL REQUIRED: ☐ YES ☐ NO
CONDITIONAL RELEASE: CR NO. _____		APPROVED BY: DATE

APPROVAL OF DISPOSITION:		VERIFICATION OF DISPOSITION:	
VP-ENGINEERING	DATE	ACCEPTED BY	DATE
QA MANAGER	DATE	QA MANAGER	DATE
ANI	DATE	ANI	DATE

-B-

L-20-87

PSI DRAWING # V049-4-003 REV 1
V049-4-101 REV 3

DATE OF INSPECTION 6-20-87
WITNESS (PSI) GS

SERIAL #V0494003-09
RANOR JOB # 7300FM

SHIFTED PLUS .02 F/ original

DEGREE 0° (MACHINE ORIENTATION)
DEGREE ∅ (DRAWING ORIENTATION)

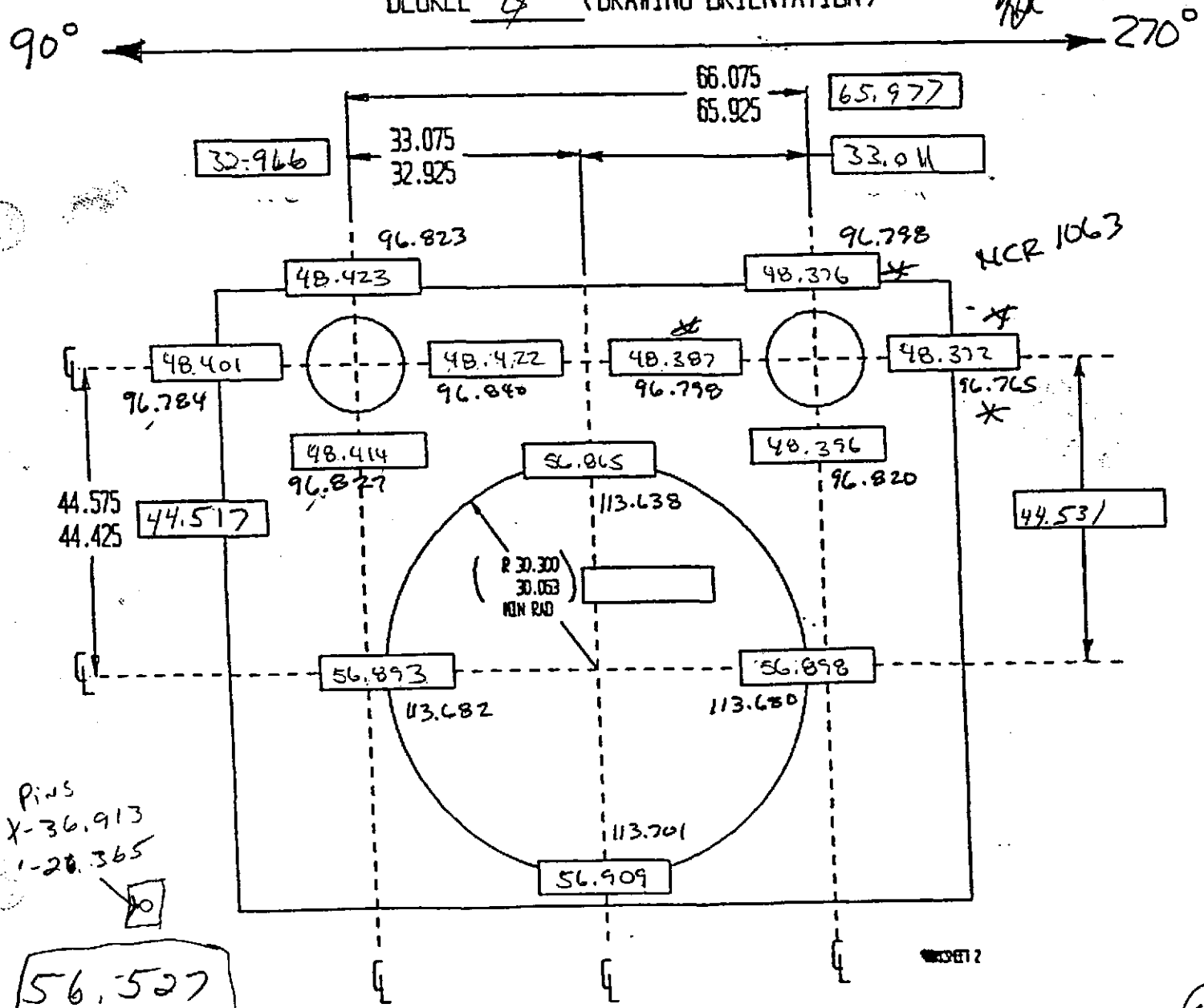

Pins
X-36.913
Y-28.365

56.527

6-20-97

PSI DRAWING # V049-4-003 REV 1
V049-4-101 REV 3

DATE OF INSPECTION 6-20-97
WITNESS (PSI) GS

SERIAL #V0494003-09
RANOR JOB # 7300Fm

SHIFTED -02 F/original

DEGREE 180° (MACHINE ORIENTATION)
DEGREE -180 (DRAWING ORIENTATION)

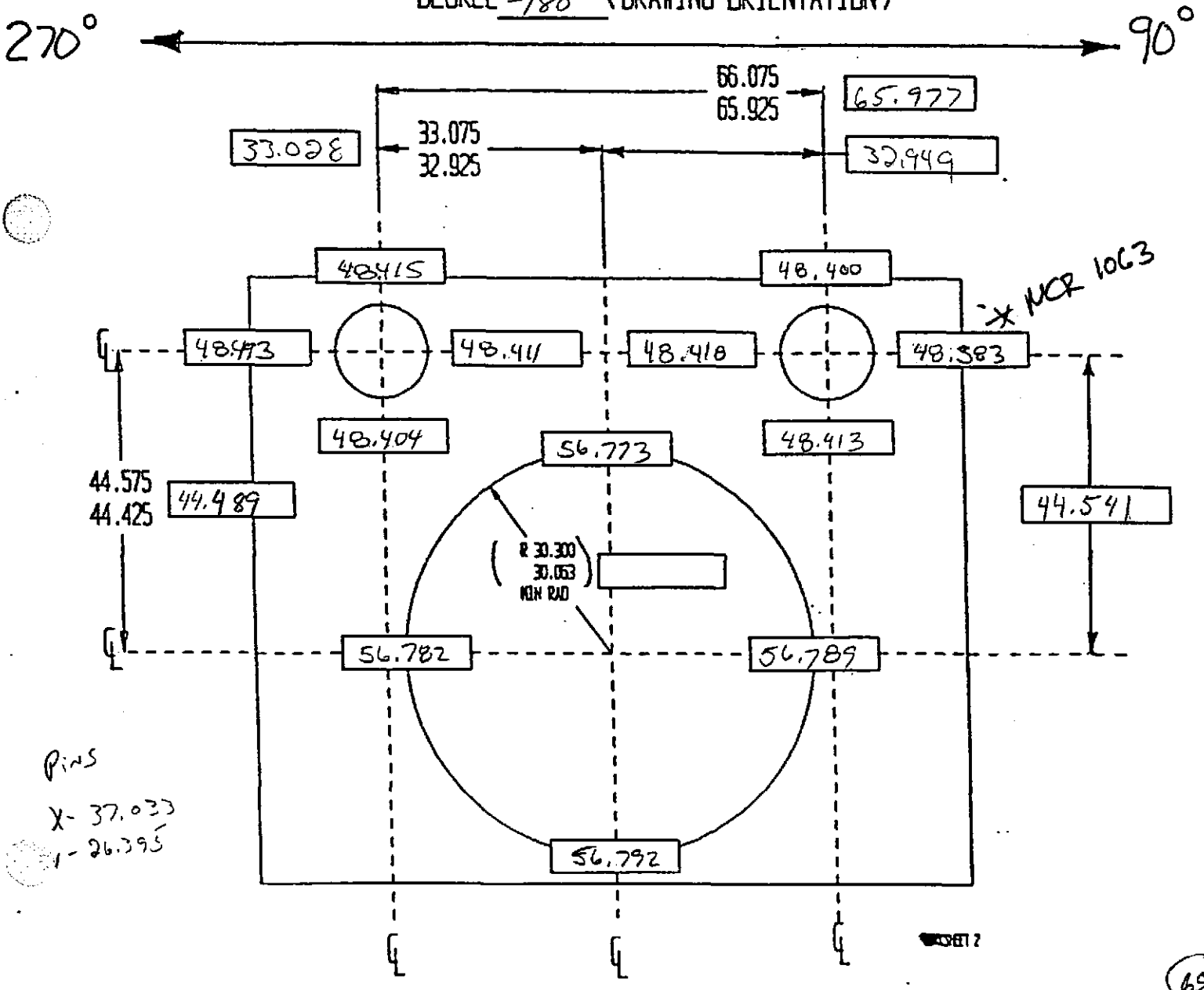

* NCR 1063

Pins
X- 37.033
Y- 26.395

SHEET 2

65

COMPANY: 1 RANOR, INC.

JOB/LOT NUMBER	JOB DESC.	PART NUMBER	PART DESCRIPTION	REV	- CODES - #	JOB USER	CUSTOMER P.O. N
7300FM	LIGO VACUMM CHAMBER	V049-4-101	PSI BEAM SPLITTER CHAMBERS				555822

LEVEL OF ASSY:	REV	PART NUMBER	PART DESCRIPTION	PROD QTY	START DATE	DUE DATE	PARENT LEVEI
2		V049-4-101 LEV 2	P.S.I. UPPER CHAMBER	15	9/17/96	2/13/97	

OPERATIONS:

SEQ	W/C	OPR	DESCRIPTION	DPT	PCS/ASY	OP. QTY	OVERLAP	S/U STD	PROD STD	PROD HRS	START	DUE	IN

.
THIS LEVEL 2 IS FOR THE FABRICATION, & MACHINING OF THE
UPPER SHELL ASSEMBLY. REF. DRAWING V049-4-101, & V049-4-003.
.
SPECIAL PRECAUTIONS MUST BE TAKEN NOT TO HAVE CARBON STEEL
IN CONTACT WITH THIS VESSEL MATERIAL, AS WELL AS NO
OILS, & OR HYDROCARBON CONTAMINATIONS OF ANY TYPE.
.
WELDING BY QUALIFIED WELDERS ONLY, USING GTAW, & PAW
IN ACCORDANCE WITH PROCEDURES: P-P8-P8-1, REV.0 AND
T-P8-P8-PSI, REV.0.
.
NO AIR TOOLS CAN BE USED FOR PROCESSING THIS MATERIAL
USE ONLY ELECTRIC TOOLS . GRINDING IS ALLOWED PROVIDED THE
EDGE IS CARBIDE BURRED TO CLEAN METAL. ALL PLASMA CUT EDGES
MUST ALSO BE CLEANED WITH CARBIDE BURRS.
.
ALL MATERIALS SUPPLIED BY THE CUSTOMER
MAT'L: 304 L, STAINLESS STEEL.
.
REFER TO LEVELS BELOW FOR COMPONENT PART FABRICATION:
.
LEVEL 2A: UPPER SHELL, (item 4)
.
LEVEL: 2B, UPPER HEAD. (item 65)
.
LEVEL: 2C, TOP FLANGE, & MISC. PARTS. (items 6,17,18,
19, 34, 50, & 63).
.
LEVEL: 2D, MACHINED FLANGE ASSEMBLIES.
.
LEVEL 90: ALL RANOR FIXTURING
.

10	FN1	500	STEAM CLEANING	FN	1.00	15		.00		4.00			

.
STEAM CLEAN USING OAKITE 1300 ONLY, FOLLOWED BY STEAM ONLY
.
BY: JB DATE: 2-9-97
.

15	AF1	400	Welding Assembly-Fitting	AS	1.00	15		.00		15.00	9/17/96	9/18/96	

.
PRIOR TO FIT-UP, SEE DIMESIONAL INSPECTION REPORTS ON THE
HEADS, AND UPPER SHELLS. MATCH SHELLS TO HEADS AS REQUIRED.

(66)

PROG: JC4100 | ROUTING SHEET | PAGE: 3
USER: DRB | --- SHOP COPY --- | DATE: 9/2(
TIME: 11.0(

COMPANY: 1 RANOR, INC.

JOB/LOT NUMBER	JOB DESC.	PART NUMBER	PART DESCRIPTION	REV	- CODES - #	JOB USER	CUSTOMER P.O. N
7300FM	LIGO VACUMM CHAMBER	V049-4-101	PSI BEAM SPLITTER CHAMBERS				555822

LEVEL OF ASSY:	REV	PART NUMBER	PART DESCRIPTION	PROD QTY	START DATE	DUE DATE	PARENT LEVEI
2		V049-4-101 LEV 2	P.S.I. UPPER CHAMBER	15	9/17/96	2/13/97	

OPERATIONS:

SEQ	W/C	OPR	DESCRIPTION	DPT	PCS/ASY	OP. QTY	OVERLAP	S/U STD	PROD STD	PROD HRS	START	DUE	IN

FIT-UP, & ASSEMBLE THE HEAD ITEM 14 TO THE TOP SHELL ITEM 4 PER DRAWING SHEET 2, DETAIL 4.

HAVE Q.C. VERIFY & SIGN OFF ON SEQ. NO. 20

HEAD TO SHELL FIT-UP:

BY: J.R.M DATE: 2-10-97

FIT-UP & ASSEMBLE THE STIFFNING RING ITEM 17 TO THE ~~LOWER~~ UPPER SHELL.

BY: ST DATE: 2-14-97

20 QC2 560 Fit Up Inspection QC 1.00 15 .00 60.00 9/18/96 9/24/96

INSPECT THE FIT-UP OF THE HEAD TO THE TOP SHELL, ALL FIT-UPS MUST BE WITHIN 1/16" .

REF. P.S.I QUALITY PLAN SEQ. I1

HEAD TO SHELL FIT-UP:

INSPECTED BY: (RANOR Q.C.) J P Magnan DATE: 2-10-97

STIFFNER ITEM 17 TO SHELL FIT-UP:

INSPECTED BY: (RANOR Q.C. P. Schell DATE: 2-14-97

25 WE1 466 GTAW / PAW-SS WE 1.00 15 .00 300.00 9/24/96 10/21/96

WELD HEAD TO UPPER SHELL PER DRAWING, & WELD MAP.

REF. WELD PROCEDURES ABOVE: GTAW, & PAW ONLY.

ALL WELDING BY QUALIFIED WELDERS ONLY.
HEAD TO SHELL WELDING:
BY: AB DATE: 2-20-97

STIFFNER TO SHELL WELDING (item 17 to 4)

(82)

PROG: JC4100 — ROUTING SHEET — PAGE: 4
USER: DRB — --- SHOP COPY --- — DATE: 9/2(
TIME: 11.0(

COMPANY: 1 RANOR, INC.

JOB/LOT NUMBER	JOB DESC.	PART NUMBER	PART DESCRIPTION	REV #	- CODES - JOB USER	CUSTOMER P.O. N
7300FM	LIGO VACUMM CHAMBER	V049-4-101	PSI BEAM SPLITTER CHAMBERS			555822

LEVEL OF ASSY:	REV	PART NUMBER	PART DESCRIPTION	PROD QTY	START DATE	DUE DATE	PARENT LEVEL
2		V049-4-101 LEV 2	P.S.I. UPPER CHAMBER	15	9/17/96	2/13/97	

OPERATIONS:

SEQ	W/C	OPR	DESCRIPTION	DPT	PCS/ASY	OP. QTY	OVERLAP	S/U	STD	PROD STD	PROD HRS	START	DUE	IN
			BY: GB DATE: 2/22/97											
30	QC2	573	Visual Inspection	QC	1.00	15			.00		30.00	10/22/96	10/23/96	
			INSPECT THE HEAD TO SHELL WELDS											
			INSPECTED BY: (RANOR Q.C.) RJE DATE: 6/9/97											
			INSPECTED BY: (P.S.I.) GS DATE: 6-20-97											
35	AF1	400	Welding Assembly-Fitting	AS	1.00	15			.00		60.00	10/23/96	10/29/96	
			FIT-UP, & ASSEMBLE LIFT LUGS, AND PUMP REPAD PER DRAWING SHEET 2, DETAIL 21, AND WELD MAP. REF. ITEMS 19, 50, & 63.											
			BY: Jeff DATE: 2/26/97											
40	QC2	560	Fit Up Inspection	QC	1.00	15			.00		30.00	10/29/96	10/31/96	
			INSPECT LIFT LUG FIT-UP PER DRAWING:											
			INSPECTED BY: (RANOR Q.C.) W.A.T. DATE: 2.26.97											
			PSI INSPECTION NOT REQUIRED. REF. P.S.I. QUALITY PLAN SEQUENCE J1											
45	WE1	466	GTAW / PAW - SS	WE	1.00	15			.00		75.00	10/31/96	11/07/96	
			WELD THE LIFTING LUGS TO UPPER SHELL PER DRAWING SHEET 3, DETAILS 4, & 21. REF.WELD & CLEANING PROCEDURES AS WELL AS WELD MAP.											
			BY: JN. DATE: 2/26/97											
50	QC2	573	Visual Inspection	QC	1.00	15			.00		30.00	11/07/96	11/11/96	
			INSPECT LIFT LUG WELDS											
			INSPECTED BY: (RANOR Q.C.) RJE DATE: 6/9/97											
			REF. P.S.I. QUALITY PLAN SEQUENCE J1, PSI INSP. NOT REQUIRED											

(E2)

PROG: JC4100

USER: DRB

ROUTING SHEET

--- SHOP COPY ---

PAGE: 5
DATE: 9/20
TIME: 11.06

COMPANY: 1 RANOR, INC.

JOB/LOT NUMBER	JOB DESC.	PART NUMBER	PART DESCRIPTION	- CODES - REV # JOB USER	CUSTOMER P.O. N
7300FM	LIGO VACUMM CHAMBER	V049-4-101	PSI BEAM SPLITTER CHAMBERS		555822

LEVEL OF ASSY:	REV	PART NUMBER	PART DESCRIPTION	PROD QTY	START DATE	DUE DATE	PARENT LEVEL
2		V049-4-101 LEV 2	P.S.I. UPPER CHAMBER	15	9/17/96	2/13/97	

OPERATIONS:

SEQ	W/C	OPR	DESCRIPTION	DPT	PCS/ASY	OP. QTY	OVERLAP	S/U STD	PROD STD	PROD HRS	START	DUE	IN
55	HC4	615	Mach. Port Holes per Routing.	HB	1.00	15		.00		450.00	11/14/96	12/30/96	

SEE MATERIAL HANDLING CAUTIONS SHEET 1

USE ONLY CLEAN WATER SOLUABLE COOLANT REF. CINCINNATI MILACRON " CIMTECK 410 " FOR COOLANT / LUBRICATION.

LAYOUT THE TWO PORT LOCATIONS PER DRAWING, SHEET 3 HAVE Q.C. VERIFY LAYOUT. AND MILL / BORE THE TWO LOCATION FOR THE 14" O.D. PORTS.

BY: JD DATE: 4-8-97

SEQ	W/C	OPR	DESCRIPTION	DPT	PCS/ASY	OP. QTY	OVERLAP	S/U STD	PROD STD	PROD HRS	START	DUE	IN
60	QC2	585	Dimensional Inspection	QC	1.00	15		.00		45.00	12/30/96	1/03/97	

INSPECT THE 14" DIA. PORT LOCATIONS AS WELL AS THE FLANGE END WELD PREP.

INSPECTED BY:(RANOR Q.C.) R.D. DATE: 4-8-97

INSPECTED BY: (P.S.I.) G S DATE: 6-20-97

REF. P.S.I. INSPECTION PLAN SEQ. M1

SEQ	W/C	OPR	DESCRIPTION	DPT	PCS/ASY	OP. QTY	OVERLAP	S/U STD	PROD STD	PROD HRS	START	DUE	IN
65	AF1	400	Welding Assembly-Fitting	AS	1.00	15		.00		60.00	1/03/97	1/08/97	

ASSEMBLE AND FIT-UP NOZZLE REINFORCEMENTS, ITEM 18 , TWO PLACES. PER DWG. SHEET 2, DETAIL 5.

BY: SI DATE: 5/14/97

SEQ	W/C	OPR	DESCRIPTION	DPT	PCS/ASY	OP. QTY	OVERLAP	S/U STD	PROD STD	PROD HRS	START	DUE	IN
70	WE1	466	PAW / GTAW-SS	WE	1.00	15		.00		150.00	1/08/97	1/21/97	

WELD NOZZLE REINFORCEMENTS PER DRAWING SHEET 2, DETAIL 5, AND WELD MAPS.

BY: W DATE: 5/15/97

SEQ	W/C	OPR	DESCRIPTION	DPT	PCS/ASY	OP. QTY	OVERLAP	S/U STD	PROD STD	PROD HRS	START	DUE	IN
75	QC2	573	Visual Inspection	QC	1.00	15		.00		45.00	1/21/97	1/24/97	

INSPECT WELDING OF NOZZLE REPADS.

69

PROG: JC4100 | ROUTING SHEET | PAGE: 6
USER: DRB | --- SHOP COPY --- | DATE: 9/2(
TIME: 11.0(

COMPANY: 1 RANOR, INC.

JOB/LOT NUMBER	JOB DESC.	PART NUMBER	PART DESCRIPTION	REV #	- CODES - JOB USER	CUSTOMER P.O. N
7300FM	LIGO VACUMM CHAMBER	V049-4-101	PSI BEAM SPLITTER CHAMBERS			555822

LEVEL OF ASSY:	REV	PART NUMBER	PART DESCRIPTION	PROD QTY	START DATE	DUE DATE	PARENT LEVEI
2		V049-4-101 LEV 2	P.S.I. UPPER CHAMBER	15	9/17/96	2/13/97	

OPERATIONS:

SEQ	W/C	OPR	DESCRIPTION	DPT	PCS/ASY	OP. QTY	OVERLAP	S/U STD	PROD STD	PROD HRS	START	DUE	IN
			INSPECTED BY: (RANOR Q.C.) RJE DATE: 6/9/97										
			REF. P.S.I. QUALITY PLAN SEQ. N1										
			NO PSI INSPECTION REQUIRED.										
80	AF1	400	Welding Assembly-Fitting	AS	1.00	15		.00		30.00	1/24/97	1/27/97	
			FIT-UP THE 14" NOZZLES TO THE UPPER SHELL. BY: ST DATE: 5/20/97										
85	WE1	466	PAW / GTAW-SS	WE	1.00	15		.00		60.00	1/27/97	1/31/97	
			WELD THE 14" DIA. NOZZLES TWO PLACES, PER DRAWING DETAIL 5, AND WELD MAP. BY: W DATE: 5/20/97										
90	QC2	573	Visual Inspection	QC	1.00	15		.00		30.00	1/31/97	2/03/97	
			INSPECT THE WELDING OF THE 14" NOZZLES TO THE UPPER SHELL										
			INSPECTED BY: (RANOR Q.C.) RJE DATE: 6/9/97										
			REF. P.S.I. QUALITY PLAN SEQ. J1.										
95	WE1	466	GTAW-SS	WE	1.00	15		.00		10.00	2/03/97	2/04/97	
			WELD ITEM 9 FLANGE ASSEMBLIES TO UPPER SHELL PER DRAWING DETAIL 5, AND WELD MAPS. BY: W DATE: 5/~~04~~/97										
100	QC2	573	Visual Inspection	QC	1.00	15		.00		60.00	2/04/97	2/07/97	
			INSPECTED BY:(RANOR Q.C.) RJE DATE: 6/17/97										
			REF. P.S.I. QUALITY PLAN SEQ. P1										

(Y8)

PROG: JC4100 R O U T I N G S H E E T PAGE: 7
USER: DRB --- SHOP COPY --- DATE: 9/20
TIME: 11.06

COMPANY: 1 RANOR, INC.

JOB/LOT NUMBER	JOB DESC.	PART NUMBER	PART DESCRIPTION	REV	- CODES - #	JOB USER	CUSTOMER P.O.
7300FM	LIGO VACUMM CHAMBER	V049-4-101	PSI BEAM SPLITTER CHAMBERS				555822

LEVEL OF ASSY:	REV	PART NUMBER	PART DESCRIPTION	PROD QTY	START DATE	DUE DATE	PARENT LEVEL
2		V049-4-101 LEV 2	P.S.I. UPPER CHAMBER	15	9/17/96	2/13/97	

OPERATIONS:

SEQ	W/C	OPR	DESCRIPTION	DPT	PCS/ASY	OP. QTY	OVERLAP	S/U	STD	PROD STD	PROD HRS	START	DUE	IN
			NO PSI INSPECTION REQUIRED.											
105	FN1	500	STEAM CLEANING	FN	1.00	15			.00		60.00	2/07/97	2/13/97	

STEAM CLEAN WITH STEAM ONLY AND PREP FOR SHIPPMENT.

BY: _____ DATE: _____

NEXT LEVEL OF ASSEMBLY LEVEL 1 FOR THE WELDING OF THE UPPER CYLINDER TO THE FLANGE

(14)

7300 F/

RANOR, INC LEV 2 BILL OF MATERIAL

FORM QA 4.1
REV. 1 (6/22/90)

DUE DATE _____

CUSTOMER PROCESS SYS. INT. DRAWING NO. V049-4-003 UNITS REQUIRED SHEET 1 OF 1

JOB NO. 7300 FM PART DESCRIPTION UPPER SHELL ASS'Y PREPARED BY DRB Q.C. APPROVAL _____

ITEM NO.	QUANTITY	MATERIAL SPECIFICATION	THICKNESS	SIZE	LEV	SKETCH	SHEAR	SAW	THERMAL CUTTING	BEVEL	PRE-MACH.	FORM	COMMENTS	MATERIAL S-P-C	HEAT NUMBER
4	1	304L SS		1/4" UPPER SHELL	2A								S/N:	S	48825-3B
14	1	↓		UPPER HEAD	2B								S/N:	↓	Y1163-5AA
AS NOTED	A/R	↓		MISC. PARTS SEE BELOW	2C									↓	
9A	2	↓		2X FLANGE ASS'Y	2D								S/N:	↓	
														↓	
														↓	
														↓	
				ITEM 2C PARTS	2C									↓	
6	1)	304L SS	1 1/4	V049-4-091 (FLANGE)	↓								S/N:	↓	
17	1)	↓	4	4x4 & STIFFENER	↓									↓	
18	2)	↓	1/2"	14" PORT RE-PAD	↓									↓	96985-2A 96985-1A
19	2)	↓	1/2"	LIFT LUG REPAD	↓									↓	96985-1B 96985-2B
50	2)	↓	1/2"	LIFT LUG	↓									↓	96985-1A 96985-2B
63	1)	304L SS	1/2"	PUMP REPAD	2C								S/N:	S	96988-2B

RAZOR, INC

SERIAL NO. 9

WELD MAP/WELD JOINT IDENTIFICATION SHEET

WELD MAP PAGE	CUSTOMER	CUST P.O.	JOB NO.	LEVEL NO.
1 CON'T 2	PROCESS SYSTEMS	555822-00	7300 F/M	2

DESCRIPTION **UPPER SHELL SUBASSEMBLY**
DWG. No. V049-4-003

MATERIAL 304L S/S

WELDING PROCESS:	GMAW		GTAW		FCAW		SMAW		SAW	
WELD PROCEDURES	G1		T1	P-P8-P8-1 REV.0	F1		M1		S1	
	G2		T2	T-P8-P8-PSI REV.0	F2		M2		S2	
	G3		T3		F3		M3		S3	
FILLER METAL										

PREPARED BY:	APPROVED BY:	W/M REV.
DJH 9-18-96		-

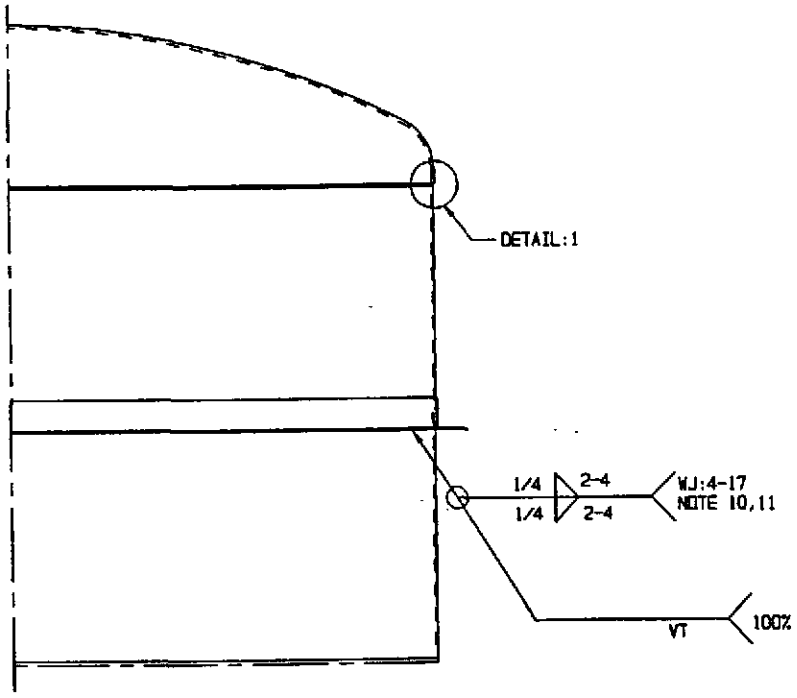

WELDING NOTES:
1. GTAW PASS #1 FROM THE O.D.
2. GTAW PASS #2 FROM THE I.D.
3. PAW PASSES FROM THE I.D. AS REQUIRED.
4. FIT-UP WITH 1/8 TO 3/16 GAP
5. TACK FROM OUTSIDE WITH PURGE INSIDE (GTAW)
6. ONE INCH TACKS ON TEN INCH CENTERS.
7. BACKSTEP WELD ROOT PASS FROM TACK TO TACK FROM OUTSIDE (TIG)
8. GTAW PASS FROM INSIDE (TIG)
9. FILL FROM I.D. AS REQUIRED (PAW)
10. TACK BOTH SIDES (PAW)
11. WELD BOTH SIDES ALTERNATING; END WELDS ON TACKS (PAW)

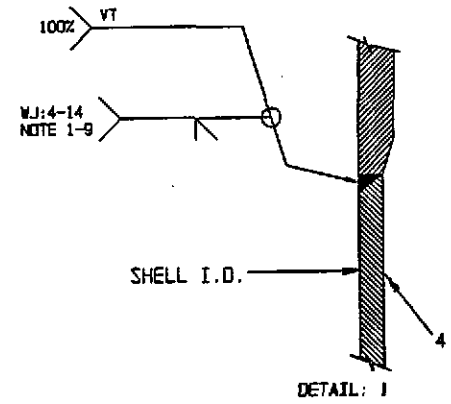

ASSEMBLY NUMBER	LOCATION NUMBER	WELD JOINT	TACKING RECORD WELDER I.D.	TACKING RECORD FILLER METAL HEAT/LOT NO.	TACKING RECORD PROC.	WELD JOINT RECORD WELDER I.D.	WELD JOINT RECORD FILLER METAL HEAT/LOT NO.	WELD JOINT RECORD PROC.	REPAIR RECORD REPAIR WELDER	REPAIR RECORD WELD REPAIR FILLER MET.	REPAIR RECORD PROC.
1	1	4-17	O	AT 6834	T2	NN	CT6834	T2			
1	1	4-14	N	S710840	T2	A	S710840	T2			
		4-14				NN	CT6834	T1-T2			
		4-14				-					

RANOR, INC

SERIAL NO. 9

WELD MAP/WELD JOINT IDENTIFICATION SHEET

WELD MAP PAGE	CUSTOMER	CUST P.O.	JOB NO.	LEVEL NO.
2 CON'T 3	PROCESS SYSTEMS	555822-00	7300 F/M	2

DESCRIPTION **UPPER SHELL SUBASSEMBLY**
DWG. No. V049-4-003

MATERIAL 304L S/S

WELDING PROCESS:	GMAW		GTAW		FCAW		SMAW		SAW	
WELD PROCEDURES	G1		T1	P-P8-P8-1 REV.0	F1		M1		S1	
	G2		T2	T-P8-P8-PSI REV.0	F2		M2		S2	
	G3		T3		F3		M3		S3	
FILLER METAL										

PREPARED BY:	APPROVED BY:	W/M REV.
DJH 9-18-96		-

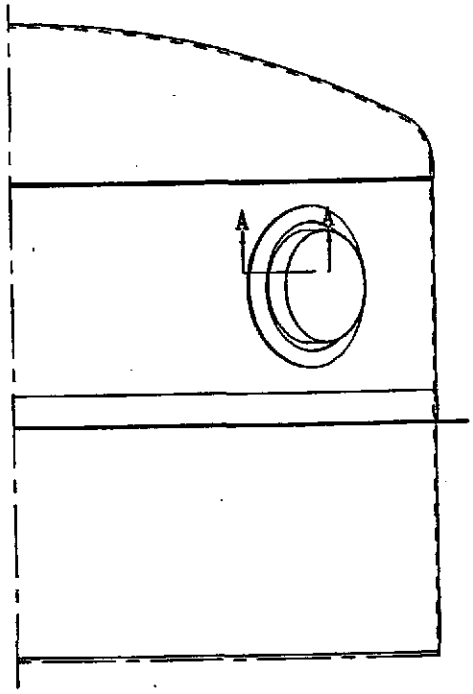

WELDING NOTES:
1. TACK NOZZLE TO SHELL FROM OUTSIDE (TIG)
2. WELD FROM INSIDE (TIG)
3. WELD FROM TACK TO TACK ON THE OUTSIDE (TIG)
4. TACK BOTH SIDES (PAW)
5. WELD BOTH SIDES (PAW)

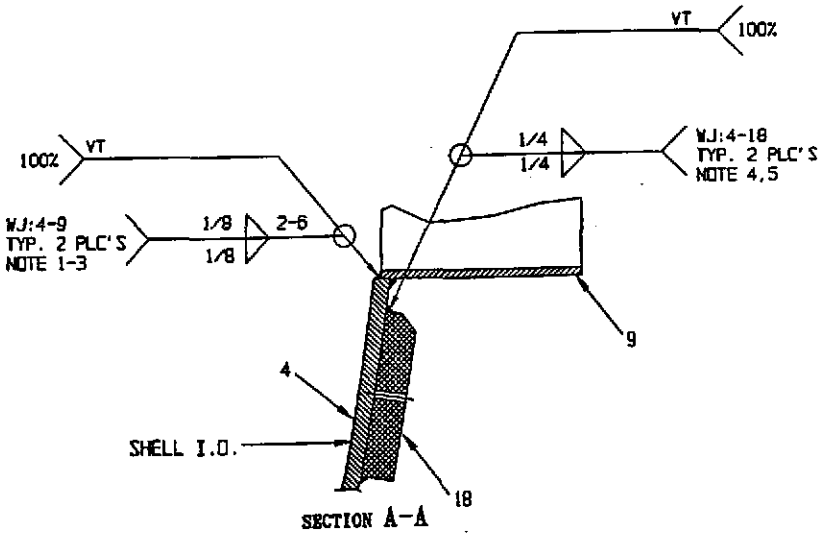

SECTION A-A

ASSEMBLY NUMBER	LOCATION NUMBER	WELD JOINT	TACKING RECORD			WELD JOINT RECORD			REPAIR RECORD		
			WELDER I.D.	FILLER METAL HEAT/LOT NO.	PROC.	WELDER I.D.	FILLER METAL HEAT/LOT NO.	PROC.	REPAIR WELDER	WELD REPAIR FILLER MET.	PROC.
1	1	4-9	W	5437864	T2	W	5437864	T2			
1	2	4-9	W	5437864	T2	W	5437864	T2			
1	1	4-18	O	5437864	T2	W	5437864	T2T1			
1	2	4-18	O	5437864	T2	W	5437864	T2T1			

RANOR, INC

SERIAL NO. 9

WELD MAP/WELD JOINT IDENTIFICATION SHEET

WELD MAP PAGE	CUSTOMER	CUST P.O.	JOB NO.	LEVEL NO.
3 CON'T 4	PROCESS SYSTEMS	555822-00	7300 F/M	2

DESCRIPTION	MATERIAL
UPPER SHELL SUBASSEMBLY DWG. No. V049-4-003	304L S/S

WELDING PROCESS:		GMAW		GTAW		FCAW		SMAW		SAW
WELD PROCEDURES	G1		T1	P-P8-P8-1 REV.0	F1		M1		S1	
	G2		T2	T-P8-P8-PSI REV.0	F2		M2		S2	
	G3		T3		F3		M3		S3	
FILLER METAL										

PREPARED BY:	APPROVED BY:	W/M REV.
DJH 9-18-96		-

WELDING NOTE:
1. (PAW) WELD AS REQUIRED.
2. WELD 3 SIDES ONLY, DO NOT WELD BEHIND LIFT LUG.

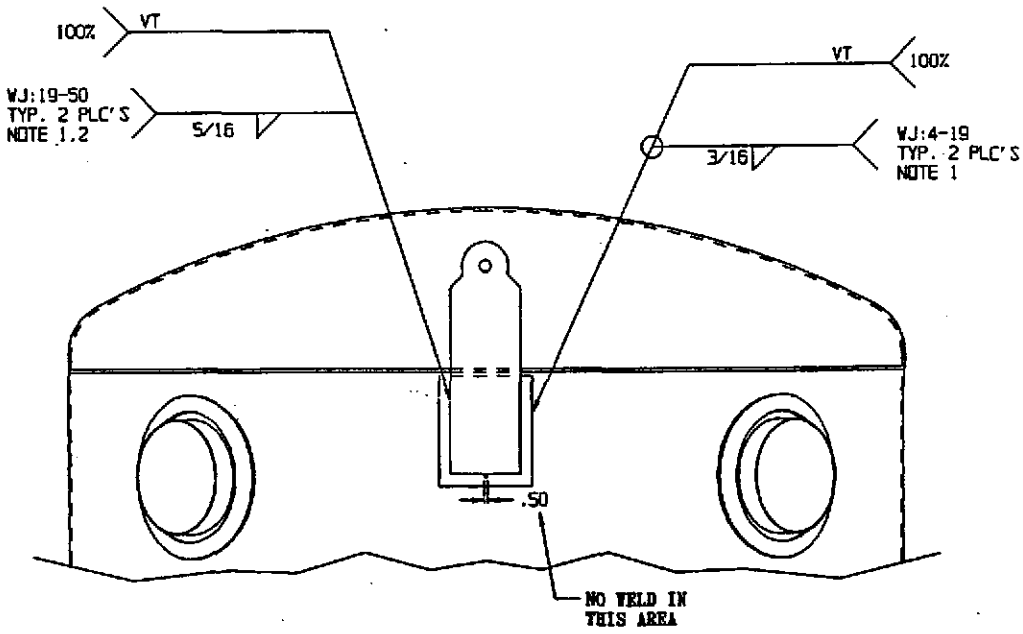

ASSEMBLY NUMBER	LOCATION NUMBER	WELD JOINT	TACKING RECORD WELDER I.D.	TACKING RECORD FILLER METAL HEAT/LOT NO.	TACKING RECORD PROC.	WELD JOINT RECORD WELDER I.D.	WELD JOINT RECORD FILLER METAL HEAT/LOT NO.	WELD JOINT RECORD PROC.	REPAIR RECORD REPAIR WELDER	REPAIR RECORD WELD REPAIR FILLER MET.	REPAIR RECORD PROC.
1	1	4-19	C	AT6834	T2	N	CT6834	T2			
1	2	4-19	C	AT6834	T2	N	CT6834	T2			
1	1	19-50	C	AT6834	T2	N	CT6834	F2			
1	2	19-50	C	AT6834	T2	N	CT6834	F2			

RANOR, INC SERIAL NO. 9

WELD MAP/WELD JOINT IDENTIFICATION SHEET

WELD MAP PAGE	CUSTOMER	CUST P.O.	JOB NO.	LEVEL NO.
4 CON'T 5	PROCESS SYSTEMS	555822-00	7300 F/M	2

DESCRIPTION UPPER SHELL SUBASSEMBLY
DWG. No. V049-4-003

MATERIAL 304L S/S

WELDING PROCESS:	GMAW	GTAW	FCAW	SMAW	SAW
WELD PROCEDURES	G1	T1 P-P8-P8-1 REV.0	F1	M1	S1
	G2	T2 T-P8-P8-PSI REV.0	F2	M2	S2
	G3	T3	F3	M3	S3
FILLER METAL					

PREPARED BY: DJH 9-18-96 APPROVED BY: W/M REV. -

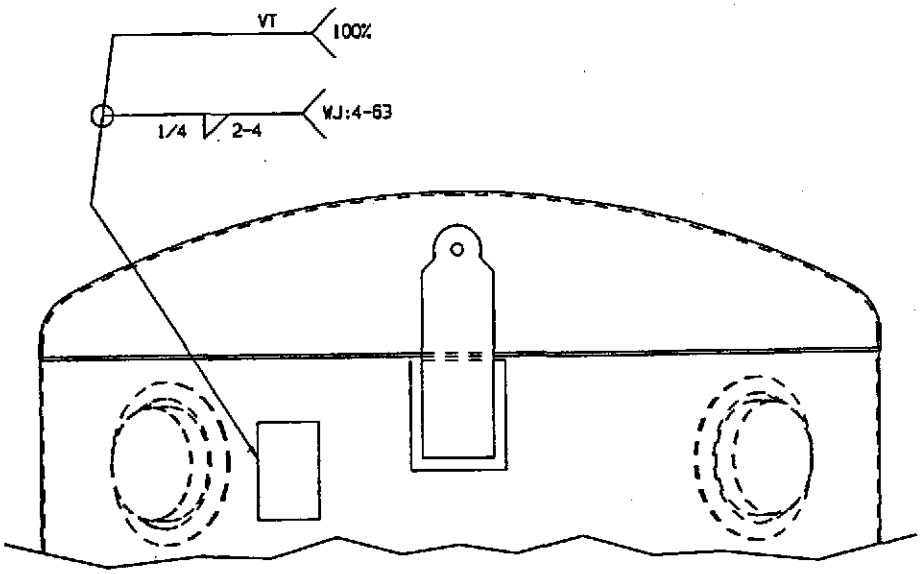

ASSEMBLY NUMBER	LOCATION NUMBER	WELD JOINT	TACKING RECORD			WELD JOINT RECORD			REPAIR RECORD		
			WELDER I.D.	FILLER METAL HEAT/LOT NO.	PROC.	WELDER I.D.	FILLER METAL HEAT/LOT NO.	PROC.	REPAIR WELDER	WELD REPAIR FILLER MET.	PROC.
1	1	4-63	C	AT6834	T1	N	CT6834	T2			

RANOR, INC

S/N: 9

INSPECTION/NONDESTRUCTIVE EXAMINATION RECORD

WELD MAP	CUSTOMER:	CUSTOMER PO:	JOB NO.:	LEVEL NO.:
5 CONT. –	PROCESS SYSTEMS INT.	555822-00	7300 F/M	2

DESCRIPTION:	MATERIAL:
UPPER SHELL ASSEMBLY; DWG NO. V049-4-003	304L S/S

PREPARED BY	APPROVED BY:	WELD MAP REV.:
DJH 6-18-96		—

VISUAL EXAMINATION REPORT - PROCEDURE NO. RQCP-25, REV. 4

AREA EXAMINED:
- ☐ ROOT
- ☒ FINAL
- ☐ BEVELED EDGES

SURFACE CONDITION:
- ☒ AS-WELDED
- ☐ GROUND
- ☐ MACHINED

WELD JOINT NUMBER	WJ:4-17	WJ:4-14	WJ:4-9 2 PLC'S	WJ:4-18 2 PLC'S	WJ:4-19 2 PLC'S	WJ:19-50 2 PLC'S	WJ:4-63		
NDE EXAMINER LEVEL DATE	RJE II 6/9/97	RJE II 6/9/97	RJE II 6/9/97	RJE II 6/9/97	RJE II 6/9/97	RJE II 6/9/97	RJE II 6/9/97		
CUSTOMER QUALITY REP. DATE									
Cracks	—	—	—	—	—	—	—		
Fusion	2 ~~OK~~	OK	OK	OK	2	OK	OK		
Crater Filled to Full Cross-section of Weld	OK	OK	OK	OK	OK	OK	OK		
Weld Profile	OK	OK	OK	OK	OK	OK	OK		
Undercut	2	8	1	OK	OK	1	OK		
Piping Porosity	OK	OK	OK	OK	OK	OK	OK		
Fillet Weld Size	OK	OK	OK	OK	OK	OK	OK		
Visual Indications After Repair	0	0 ~~OK~~	0	—	0	0	—		
Final Weld Joint Acceptance	ACCEPT	ACCEPT	ACCEPT	ACCEPT	ACCEPT	ACCEPT	ACCEPT		

VISUAL EXAMINATION REPORT - PROCEDURE NO. RQCP-25, REV. 4

AREA EXAMINED:
- ☐ ROOT
- ☐ FINAL
- ☐ BEVELED EDGES

SURFACE CONDITION:
- ☐ AS-WELDED
- ☐ GROUND
- ☐ MACHINED

WELD JOINT NUMBER									
NDE EXAMINER LEVEL DATE									
CUSTOMER QUALITY REP. DATE									
Cracks									
Fusion									
Crater Filled to Full Cross-section of Weld									
Weld Profile									
Undercut									
Piping Porosity									
Fillet Weld Size									
Visual Indications After Repair									
Final Weld Joint Acceptance									

NDE Examiner: [signature] Level: II Date: 6/10/97

PROG: JC4100 **PRODUCTION** ROUTING SHEET PAGE: 3
USER: DRB --- SHOP COPY --- DATE: 12/1
TIME: 15.0

COMPANY: 1 RANOR, INC.

JOB/LOT NUMBER	JOB DESC.	PART NUMBER	PART DESCRIPTION	- CODES - REV # JOB USER	CUSTOMER P.O.
7300FM	LIGO VACUMM CHAMBER	V049-4-101	PSI BEAM SPLITTER CHAMBERS		555822

LEVEL OF ASSY: 1E	REV	PART NUMBER	PART DESCRIPTION	PROD QTY	START DATE	DUE DATE	PARENT LEVEL
		V049-4-101 LEV 1E	P.S.I. 1/2", 60"PORTS	15	9/11/96	2/11/97	

OPERATIONS:

SEQ	W/C	OPR	DESCRIPTION	DPT	PCS/ASY	OP. QTY	OVERLAP	S/U STD	PROD STD	PROD HRS	START	DUE	IN

.
THIS LEVEL 1E, IS FOR THE LOWER VESSEL 60" PORTS.
.
REFERENCE DRAWING V049-4-101, AND V049-4-003
.
MATERIAL 304 L STAINLESS STEEL, FURNISHED BY THE CUSTOMER.
.
ALL WELDING ON ROOT PASSES USING GTAW WITH BACKPURGE, AND COMPLETED USING THE PLASMA ARC PROCESS.
.
SPECIAL PRECAUTIONS MUST BE TAKEN NOT TO HAVE CARBON STEEL IN CONTACT WITH THE MATERIAL ON THIS JOB, AS WELL AS NO OILS, & OR HYDROCARBON CONTAMINATION OF ANY TYPE.
.
WELDING BY QUALIFIED PERSONELL ONLY USING GTAW, & PAW IN ACCORDANCE WITH PROCEDURES: P-P8-P8-2, REV. 0., AND T-P8-P8-PSI, REV.0.
.
NO AIR TOOLS CAN BE USED FOR PROCESSING THIS MATERIAL, USE ONLY ELECTRIC TOOLS,GRINDING IS PERMISSIBLE ONLY IF FOLLOWED BY CARBIDE BURRS. PLASMA CUT EDGES ALSO REQUIRE CARBIDE BURRING.
.
ALL HEAT NO'S MUST BE RECORDED, & MAINTAINED.
PARTS ARE TO BE VIBRO-ETCHED ON THE O.D. ONLY.
.
NO MARKING ON THE PART I.D. AT ALL, AND NO MARKERS ON THE MATERIAL. MARKINGS ON THE O.D ON 3M YELLOW NUCLEAR TAPE # 483 PURCHASED FOR THIS JOB, MARKINGS ON THIS MATERIAL ONLY.
.

10	FC1	070	Plasma Cut	FC	1.00	15		.00		150.00	9/11/96	9/24/96	

.
PLASMA CUT ITEMS PER B.O.M., & DNC.
.
ITEM 12 DNC MAKES 7 PCS, 4 PCS REQUIRED, PER UNIT.
.
RECORD ALL HEAT NUMBERS FOR EACH PART.
.
BY: _____ DATE: 01/16/97
.

15	HC8	615	Machine per print	HB	1.00	15		.00		50.00	9/24/96	9/30/96	

.
MACHINE THE FIT-UP PREP. TO THE 105.5" O.D. CYLINDER

(78)

COMPANY: 1 RANOR, INC.

JOB/LOT NUMBER	JOB DESC.	PART NUMBER	PART DESCRIPTION	REV	- CODES - #	JOB USER	CUSTOMER P.O.
7300FM	LIGO VACUMM CHAMBER	V049-4-101	PSI BEAM SPLITTER CHAMBERS				555822

LEVEL OF ASSY:	REV	PART NUMBER	PART DESCRIPTION	PROD QTY	START DATE	DUE DATE	PARENT LEVEL
1E		V049-4-101 LEV 1E	P.S.I. 1/2", 60"PORTS	15	9/11/96	2/11/97	

OPERATIONS:

SEQ	W/C	OPR	DESCRIPTION	DPT	PCS/ASY	OP. QTY	OVERLAP	S/U STD	PROD STD	PROD HRS	START	DUE	IN

INCLUDING THE 3/16 WELD PREP.

BY: _____ DATE: _____

20 BV1 200 Bevel to Spec. BV 1.00 15 .00 180.00 9/30/96 10/08/96

PROTECT THE INSIDE SURFACE FROM DIRT, & OILS.

USE ALUMINUM SHOES WITH BEVELER TO AVOID CARBON STEEL CONTACT WITH THE INSIDE OF THE SHELL.

PREP THE EDGES OF ITEM 12, AS REQUIRED.

PER DRAWING DETAIL 9, FOR SEAM WELDS, AND DETAIL 28 FOR ANY ADDITIONAL PREPS REQUIRED FOR FIT-UP.
AS WELL AS SKETCH # 7.

BY: _____ DATE: _____

25 PB1 260 Bump - Start PB 1.00 15 .00 90.00 10/08/96 10/15/96

VERIFY THE DIRECTION OF ROLLING WITH REFERENCE TO THE WELD PREPS, PRIOR TO FORMING.

USE ALUMINUM AND OR CARPET PURCHASED FOR THIS PROJECT TO AVOID ANY CARBON STEEL CONTACT WITH THE INSIDE OF THE VESSEL.

BUMP START ENDS OF ITEM 12, PER SKETCH 7. 14 PCS BG 1/28/97 26 PCS BG 2/26/97

BY: BG DATE: 2/26/97 4/5/97

30 RO1 300 Roll Forming RO 1.00 15 .00 375.00 10/15/96 11/14/96

VERIFY THE INSIDE SURFACE PRIOR TO ROLLING, & THAT BEVELS ARE CORRECT WITH REFERENCE TO THE I.D..

ROLL ITEM 12 PER DRAWING DETAIL 10, SHEET 3, AND SKETCH 7. 14 PCS D.P. 1/30/97 6 PCS DP 3/25-97 4 PCS DP 4/5/97 6 PCS DP 4/7/97 6 PCS DP 4/9/97

BY: DP DATE: 4/9/97

35 QC2 585 Dimensional Inspection QC 1.00 15 .00 150.00 11/14/96 11/29/96

(74)

PROG: JC4100 **PRODUCTION** ROUTING SHEET PAGE: 3
USER: DRB --- SHOP COPY --- DATE: 12/1
TIME: 15.0

COMPANY: 1 RANOR, INC.

JOB/LOT NUMBER	JOB DESC.	PART NUMBER	PART DESCRIPTION	REV	- CODES - # JOB	USER	CUSTOMER P.O.
7300FM	LIGO VACUMM CHAMBER	V049-4-101	PSI BEAM SPLITTER CHAMBERS				555822

LEVEL OF ASSY:	REV	PART NUMBER	PART DESCRIPTION	PROD QTY	START DATE	DUE DATE	PARENT LEVEL
1E		V049-4-101 LEV 1E	P.S.I. 1/2", 60"PORTS	15	9/11/96	2/11/97	

OPERATIONS:

SEQ	W/C	OPR	DESCRIPTION	DPT	PCS/ASY	OP. QTY	OVERLAP	S/U STD	PROD STD	PROD HRS	START	DUE	IN
			INSPECT ALL ITEMS PRIOR TO WELDING, & FIT-UP PER DRAWINGS AND SKETCHES.										
			INSPECTED BY:_____ DATE:_____										
40	AF1	400	Welding Assembly-Fitting	AS	1.00	15		.00		150.00	11/29/96	12/11/96	
			FIT-UP FOR WELDING THE LONGITUDINAL SEAMS OF ITEMS 3, AND 12 REFERENCE DRAWING DETAILS, SKETCHES, AND WELD MAPS. #21 + #22 1/31/97 JdL										
			BY: _____ DATE:_____ Item 12 SI 4/24/97										
45	QC2	560	Fit Up Inspection	QC	1.00	15		.00		45.00	12/11/96	12/12/96	
			INSPECT THE FIT-UP FOR WELD OF THE ABOVE ITEMS.										
			INSPECTED BY: _____ DATE:_____										
			REF. P.S.I. QUALITY PLAN SEQ. G. , NO CUSTOMER WITNESS REQ. FOR FIT-UP.										
50	WE1	466	GTAW-SS	WE	1.00	15		.00		450.00	12/12/96	1/22/97	
			REFERENCE THE WELD PROCEDURES, WELD MAPS, & DRAWING DETAILS.										
			SIGN OFF WELDING FOR EACH OF THE 20 NOZZES ON EACH OF THEIR INDIVIDUAL WELD MAPS.										
			BY: _____ DATE:_____										
55	QC3	573	Visual Inspection	QC	1.00	15		.00		60.00	1/22/97	1/27/97	
			INSPECT WELDS ON LOGNITUDAL SEAMS OF THE ABOVE ITEMS										
			SIGN OFF ON THIS OPERATION SEQUENCE, & WELD NDE REPORT.										
			INSPECTED BY: (RANOR Q.C.) JP Magnan DATE: 4-25-97										
			INSPECTED BY: (P.S.I.) _____ DATE_____ REF. P.S.I. QUALITY PLAN SEQ.G.										

(8)

PROG: JC4100 **PRODUCTION** ROUTING SHEET PAGE: 4(
USER: DRB --- SHOP COPY --- DATE: 12/1
TIME: 15.0

COMPANY: 1 RANOR, INC.

JOB/LOT NUMBER	JOB DESC.	PART NUMBER	PART DESCRIPTION	- CODES - REV #	JOB USER	CUSTOMER P.O.
7300FM	LIGO VACUMM CHAMBER	V049-4-101	PSI BEAM SPLITTER CHAMBERS			555822

LEVEL OF ASSY:	REV	PART NUMBER	PART DESCRIPTION	PROD QTY	START DATE	DUE DATE	PARENT LEVEI
		V049-4-101 LEV 1E	P.S.I. 1/2", 60"PORTS	15	9/11/96	2/11/97	

OPERATIONS:

SEQ	W/C	OPR	DESCRIPTION	DPT	PCS/ASY	OP. QTY	OVERLAP	S/U STD	PROD STD	PROD HRS	START	DUE	IN
60	PB1	265	REROUND	PB	1.00	15		.00		90.00	1/27/97	1/31/97	

RE-ROUND ALL CYLINDERS, & PORTS PER SKETCHES. 10 ports Sent 2/15/97

BY: _____ DATE: _____

65	QC3	585	Dimensional Inspection	QC	1.00	15		.00		60.00	1/31/97	2/05/97	

INSPECT FINSIHED PORTS, PER DRAWING, & SKETCHES.

INSPECTED BY: (RANOR Q.C.)_____ DATE:_____

70	AF1	400	Welding Assembly-Fitting	AS	1.00	15		.00		60.00	2/05/97	2/11/97	

ASSEMBLE SPIDERS, & RE-ROUNDING FIXTURES FOR ASSEMBLY. TO LOWER SHELL.

BY: _____ DATE: _____

SEE NEXT LEVEL OF ASSEMBLY LEVEL 1, LOWER SHELL ASSEMBLY.

(A)

7300 F/M

RAMOR, INC LEV 1E BILL OF MATERIAL FORM QA 4.1 REV. 1 (6/22/90) DUE DATE

CUSTOMER PROCESS SYS. INT DRAWING NO. V049-4-001 UNITS REQUIRED 10 SHEET 1 OF 1

JOB NO. 7300FM PART DESCRIPTION 60" PORTS PREPARED BY DRB Q.C. APPROVAL

ITEM NO.	QUANTITY	MATERIAL SPECIFICATION	THICKNESS	SIZE	LEV	SKETCH	SHEAR	SAW	THERMAL CUTTING	BEVEL	PRE-MACH.	FORM	COMMENTS	MATERIAL S-P-C	HEAT NUMBER
12	40	304L SS	1/2"	27 11/16 X 191.64		7			DNC ✓	—	—	—	7 pcs	C	48945-5A
													7 pcs	—	48945-1A
													7 pcs	—	48945-2A
													7 pcs	—	39734-2A
													7 pcs.	—	39734-3A
													5 pcs.	—	47804-5A

RANOR, INC

SERIAL NO. *9

WELD MAP/WELD JOINT IDENTIFICATION SHEET

WELD MAP PAGE	CUSTOMER	CUST P.O.	JOB NO.	LEVEL NO.
1A CON'T 1B	PROCESS SYS. INT.		7300FM	1E

DESCRIPTION	MATERIAL
LIGO VACUMM CHAMBER DWG. No. V049-4-003 60" NOZZLES	T 304L SA 240

WELDING PROCESS: PAW GTAW

WELD PROCEDURES	G1	P-P8-P8-3 REV.0	T1	T-P8-P8-PSI REV.0	F1		M1		S1		
	G2		T2		F2		M2		S2		
	G3		T3		F3		M3		S3		
FILLER METAL											

PREPARED BY:	APPROVED BY:	W/M REV.
D.R.B. 9-16-96		-

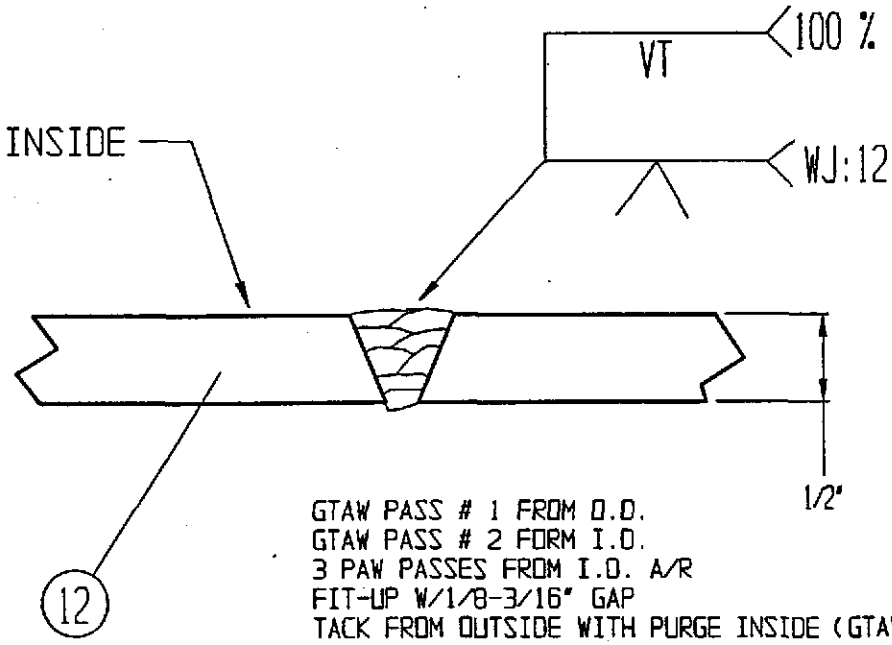

GTAW PASS # 1 FROM O.D.
GTAW PASS # 2 FORM I.D.
3 PAW PASSES FROM I.D. A/R
FIT-UP W/1/8-3/16" GAP
TACK FROM OUTSIDE WITH PURGE INSIDE (GTAW)
ONE INCH TACKS ON TEN IN. CENTERS
BACKSTEP WELD ROOT PASS FROM TACK TO TACK FROM OUTSIDE (TIG)
GTAW PASS FROM INSIDE (TIG)
FILL FROM I.D. A/R (PAW)

ASSEMBLY NUMBER	LOCATION NUMBER	WELD JOINT	TACKING RECORD			WELD JOINT RECORD			REPAIR RECORD		
			WELDER I.D.	FILLER METAL HEAT/LOT NO.	PROC.	WELDER I.D.	FILLER METAL HEAT/LOT NO.	PROC.	REPAIR WELDER	WELD REPAIR FILLER MET.	PROC.
29	1	WJ: 12	0	AT6634	T2	K22710	S437221	T1 T2			
30	1	WJ: 12	0	AT6834	T2	ww	CT6834	T1 G1			
31	1	WJ: 12	0	AT6434	T2	ww	CT6834	T1 G1			
32	1	WJ: 12	0	AT6834	T2	ww	CT6834	T1 G1			
33	1*	WJ: 12	0	AT6634	T2	ww	CT6834	T1 G1			
34	1*	WJ: 12	0	AT6434	T2	ww	CT6834	T1 G1			
35	1*	WJ: 12	0	AT6834	T2	ww	S710840 3/32 S437864 1/16	T1 G1			
36	1*	WJ: 12	0	AT6834	T2	ww	S710840 3/32 S437864 1/16	T1 G1			

RANOR, INC

INSPECTION/NONDESTRUCTIVE EXAMINATION RECORD

WELD MAP	CUSTOMER:	CUSTOMER PO:	JOB NO.:	LEVEL NO.:
CONT. –	PROCESS SYSTEMS INT.	555822-00	7300 F/M	1E

DESCRIPTION:	MATERIAL:
PART NO. 12 (60" PORTS); DWG NO. V049-4-003	304L S/S

PREPARED BY	APPROVED BY:	WELD MAP REV.:
DJH 6-23-96		—

VISUAL EXAMINATION REPORT - PROCEDURE NO. RQCP-25, REV. 4

AREA EXAMINED: ☐ ROOT ☒ FINAL ☐ BEVELED EDGES
SURFACE CONDITION: ☒ AS-WELDED ☐ GROUND ☐ MACHINED

	WELD JOINT NUMBER	WJ:12 SER: 6	WJ:12 SER: 6	WJ:12 SER: 6	WJ:12 SER: 6	WJ:12 SER: 7	WJ:12 SER: 7	WJ:12 ER: 7	WJ:12 SER: 7	WJ:12 SER: 8
	NDE EXAMINER LEVEL	JPM III	JPM III	JPM III	JPM III	JPM III	JPM III	JPM III	JPM III	JPM III
	DATE	4-25-97	4-25-97	4-25-97	4-25-97	5-27-97	5-27-97	5-27-97	5-27-97	4-25-97
	CUSTOMER QUALITY REP. DATE									
Cracks		–	–	–	–	–	–	–	–	–
Fusion		OK	OK	OK	OK	OK	OK	OK	OK	OK
Crater Filled to Full Cross-section of Weld		OK	OK	OK	OK	OK	OK	OK	OK	OK
Weld Profile		OK	OK	OK	OK	OK	OK	OK	OK	OK
Undercut		OK	OK	OK	OK	OK	OK	OK	OK	OK
Piping Porosity		OK	OK	OK	OK	OK	OK	OK	OK	OK
Fillet Weld Size		N/A	N/A	N/A	N/A	N/A	N/A	N/A	N/A	N/A
Visual Indications After Repair		0	0	0	0	0	0	0	0	0
Final Weld Joint Acceptance		Accept	Accept	Accept	Accept	Accept	Accept	Accept	Accept	Accept

VISUAL EXAMINATION REPORT - PROCEDURE NO. RQCP-25, REV. 4

AREA EXAMINED: ☐ ROOT ☒ FINAL ☐ BEVELED EDGES
SURFACE CONDITION: ☒ AS-WELDED ☐ GROUND ☐ MACHINED

	WELD JOINT NUMBER	WJ:12 SER: 8	WJ:12 SER: 8	WJ:12 SER: 8	WJ:12 SER: 9	WJ:12 SER: 9	WJ:12 SER: 9	WJ:12 ER: 9	WJ:12 SER: 10	WJ:12 SER: 10
	NDE EXAMINER LEVEL	JPM III	JPM III	JPM III	RJE II	RJE II	RJE II	RJE II		
	DATE	4-25-97	4-25-97	4-25-97	6/17/97	6/17/97	6/17/97	6/17/97		
	CUSTOMER QUALITY REP. DATE									
Cracks		–	–	–	–	–	–	–		
Fusion		OK	OK	OK	OK	OK	OK	OK		
Crater Filled to Full Cross-section of Weld		OK	OK	OK	OK	OK	OK	OK		
Weld Profile		OK	OK	OK	OK	OK	OK	OK		
Undercut		OK	OK	OK	OK	OK	OK	OK		
Piping Porosity		OK	OK	OK	OK	OK	OK	OK		
Fillet Weld Size		N/A	N/A	N/A	N/A	N/A	N/A	N/A		
Visual Indications After Repair		0	0	0	0	0	0	0		
Final Weld Joint Acceptance		Accept	Accept	Accept	Accept	Accept	Accept	Accept		

NDE Examiner: JP Magnan Level: III Date: 6-5-97

Jo-7300FM
PO 48385

Arcos Alloys
A Division of Hoskins Manufacturing Company
ount Carmel, PA 17851

DATE 12/06/96

CERTIFICATION OF TESTS

SOLD TO:

RANOR, INC.
BELLA DRIVE
P.O. BOX 458
WESTMINSTER, MA 01473

SHIPPED TO:

SAME

CT6834

ARCOS S.O. NO.	CUSTOMER ORDER NO.	CONSIGNEE ORDER NO.	DATE SHIPPED
61361	48385	N/A	12/06/96

ITEM	SIZE	GRADE	LOT NO./ALLOY NO.	QUANTITY
2	3/32 X 36"	ARCOS 308L	CT6834	100#

SPECIFICATION: AWS A5.9-93 CLASS ER308L ASME SFA 5.9
ASME SECTION II, PART C, 1995 EDITION,
AND ALL PARAS AND ADDENDA THRU 1995.

CHEMICAL ANALYSIS WIRE

C	Mn	Si	S	P	Cr	Ni	Mo	Cb	Cb + Ta
.02	2.1	.50	.01	.01	20.1	10.1	.03		
Ta	**Ti**	**Al**	**Co**	**Cu**	**Fe**	**V**			
				.04					

ADDITIONAL TESTS RESULTS

Ferrite - Diagram: _____
Magna Gage: _____
X-Ray _____
Bends _____

12/10/96

	As Welded	Heat Treated
Charpys:		
Tensiles:		
Yield		
Tensile		
Elong.		
Red. of Area		

OTHER INFORMATION
LOT CLASSIFICATION - S1
INTENSITY OF TESTING - SCHEDULE F

THIS MATERIAL IS FREE FROM MERCURY, RADIUM OR ALPHA PARTICLE CONTAMINATION.

We hereby certify that the above material has been tested in accordance with the listed specification and is in conformance with all requirements.

ARCOS

85

Q.A. MANAGER

QUALITY ASSURANCE DEPARTMENT

Jb 7300FM
Po 48385

Arcos Alloys

A Division of Hoskins Manufacturing Company
ount Carmel, PA 17851

DATE 12/06/96

CERTIFICATION OF TESTS

SOLD TO:

RANOR, INC.
BELLA DRIVE
P.O. BOX 458
WESTMINSTER, MA 01473

SHIPPED TO:

SAME

AT6834

ARCOS S.O. NO.	CUSTOMER ORDER NO.	CONSIGNEE ORDER NO.	DATE SHIPPED
61361	48385	N/A	12/06/96

ITEM	SIZE	GRADE	LOT NO./ALLOY NO.	QUANTITY
1	1/16 X 36"	ARCOS 308L	AT6834	100#

SPECIFICATION: AWS A5.9-93 CLASS ER308L ASME SFA 5.9
ASME SECTION II, PART C, 1995 EDITION,
AND ALL PARAS AND ADDENDA THRU 1995.

CHEMICAL ANALYSIS WIRE

C	Mn	Si	S	P	Cr	Ni	Mo	Cb	Cb + Ta
.02	2.1	.50	.01	.01	20.1	10.1	.03		

Ta	Ti	Al	Co	Cu	Fe	V			
				.04					

ADDITIONAL TESTS RESULTS

Ferrite - Diagram: _____
Magna Gage: _____
X-Ray _____
Bends _____

12/10/96 PJ

	As Welded	Heat Treated
Charpys:		
Tensiles:		
Yield		
Tensile		
Elong.		
Red. of Area		

OTHER INFORMATION

LOT CLASSIFICATION - S1
INTENSITY OF TESTING - SCHEDULE F

THIS MATERIAL IS FREE FROM MERCURY, RADIUM OR ALPHA PARTICLE CONTAMINATION.

We hereby certify that the above material has been tested in accordance with the listed specification and is in conformance with all requirements.

ARCOS

(86)

Q.A. MANAGER

QUALITY ASSURANCE DEPARTMENT

SANDVIK Steel

We make Quality happen . . .

MATERIAL CERTIFICATE

SANDVIK STEEL COMPANY
P.O. BOX 1220, SCRANTON, PA. 18501 PH. (717) 587-5191
PLANT LOCATION: INTERSTATE 81, WAVERLY EXIT 59

Job 7300FM

SOLD TO: BOC GASES (AIRCO)
LISLE IL

SHIP TO: RANOR Inc

CUSTOMER PURCHASE ORDER NO.: 48847

CERTIFICATE DATE: 10/03/96

SANDVIK ORDER NO.: 969030

QUANTITY: 190 LB

WORK ORDER / LOT NO.:

TAG:

AWS A-5.9

STAINLESS STEEL WELDING WIRE TYPE ER 308L

DIAMETER: 1/16"

Filler Metal Analysis, %

Heat	C	Si	Mn	P	S	Cr	Ni
S437864	.013	.430	1.720	.020	.013	19.88	9.98

	Mo	Cb/Nb	Ta	Ti	Cu	Cb/Nb+Ta	N
	.250	.010		.005	.150		.055

S437864

The material has not come in contact with mercury or mercury-containing compounds.

"Material not touched by hand after final production process cleaning."

Material has been manufactured in accordance with Sandvik Steel Company Quality Manual Revision 10 dated October 1, 1995. Quality system approved to ISO-9002/ANSI/ASQC Q9002-1994.

Bengt H. Berg, Director, Quality and Metallurgy
Daniel Damiani, Quality Engineer

15(661(9)(10)

2/17/97 DG

BOC GASES
90 RESEARCH ROAD
HINGHAM, MA 02043

87

SANDVIK Steel

"We make Quality happen"

MATERIAL CERTIFICATE

SANDVIK STEEL COMPANY

P.O. BOX 1220, SCRANTON, PA. 18501 PH. (717) 587-5191
PLANT LOCATION: INTERSTATE 81, WAVERLY EXIT 59

SOLD TO: BOC GASES (AIRCO)
LISLE IL

SHIP TO: AIRCO-NEW ENGLAND
HINGHAM MA

CUSTOMER PURCHASE ORDER NO.: 42945

CERTIFICATE DATE: 10/04/96

SANDVIK ORDER NO.: 92899

QUANTITY: PER PACKING NOTE

WORK ORDER / LOT NO.: 969031

TAG:

AWS A-5.9

STAINLESS STEEL WELDING WIRE TYPE ER 308L

DIAMETER: 3/32"

Filler Metal Analysis, %

Heat	C	Si	Mn	P	S	Cr	Ni
S710840	.015	.430	1.800	.016	.013	20.01	9.78

	Mo	Cb/Nb	Ta	Ti	Cu	Cb/Nb+Ta	N
	.050			.002	.050	.040	.050

The material has not come in contact with mercury or mercury-containing compounds.

"Material not touched by hand after final production process cleaning."

Material has been manufactured in accordance with Sandvik Steel Company Quality Manual Revision 10 dated October 1, 1995. Quality system approved to ISO-9002/ANSI/ASQC Q9002-1994.

BOC GASES
90 RESEARCH ROAD
HINGHAM, MA 02043

Bengt H. Berg, Director, Quality and Metallurgy
Daniel Damiani, Quality Engineer

15(66449)(10)

4/3/97

88

SANDVIK Steel

We make Quality happen . . .

MATERIAL CERTIFICATE

SANDVIK STEEL COMPANY
P.O. BOX 1220, SCRANTON, PA. 18501 PH. (717) 587-5191
PLANT LOCATION: INTERSTATE 81, WAVERLY EXIT 59

Jf 7300F M
PO 47602

SOLD TO: BOC GASES (AIRCO)
LISLE IL

SHIP TO: RANOR INC.
WESTMINSTER MA

CUSTOMER PURCHASE ORDER NO.: 43092

CERTIFICATE DATE: 10/18/96

SANDVIK ORDER NO.: 93512

QUANTITY: PER PACKING NOTE

WORK ORDER / LOT NO.: 957908

TAG:

AWS A-5.9

STAINLESS STEEL WELDING WIRE TYPE ER 308L DIAMETER: 1/16"

S437221

Filler Metal Analysis, %

Heat	C	Si	Mn	P	S	Cr	Ni
S437221	.011	.450	1.790	.020	.011	20.01	9.86

	Mo	Cb/Nb	Ta	Ti	Cu	Cb/Nb+Ta	N
	.220	.010		.005	.140		.056

The material has not come in contact with mercury or mercury-containing compounds.

"Material not touched by hand after final production process cleaning."

Material has been manufactured in accordance with Sandvik Steel Company Quality Manual Revision 10 dated October 1, 1995. Quality system approved to ISO-9002/ANSI/ASQC Q9002-1994.

Bengt H. Berg, Director, Quality and Metallurgy
Daniel Damiani, Quality Engineer

15(66119)(10)

TEJ 617 RANOR 11/4/96

89

CUSTOMER ORIGINAL

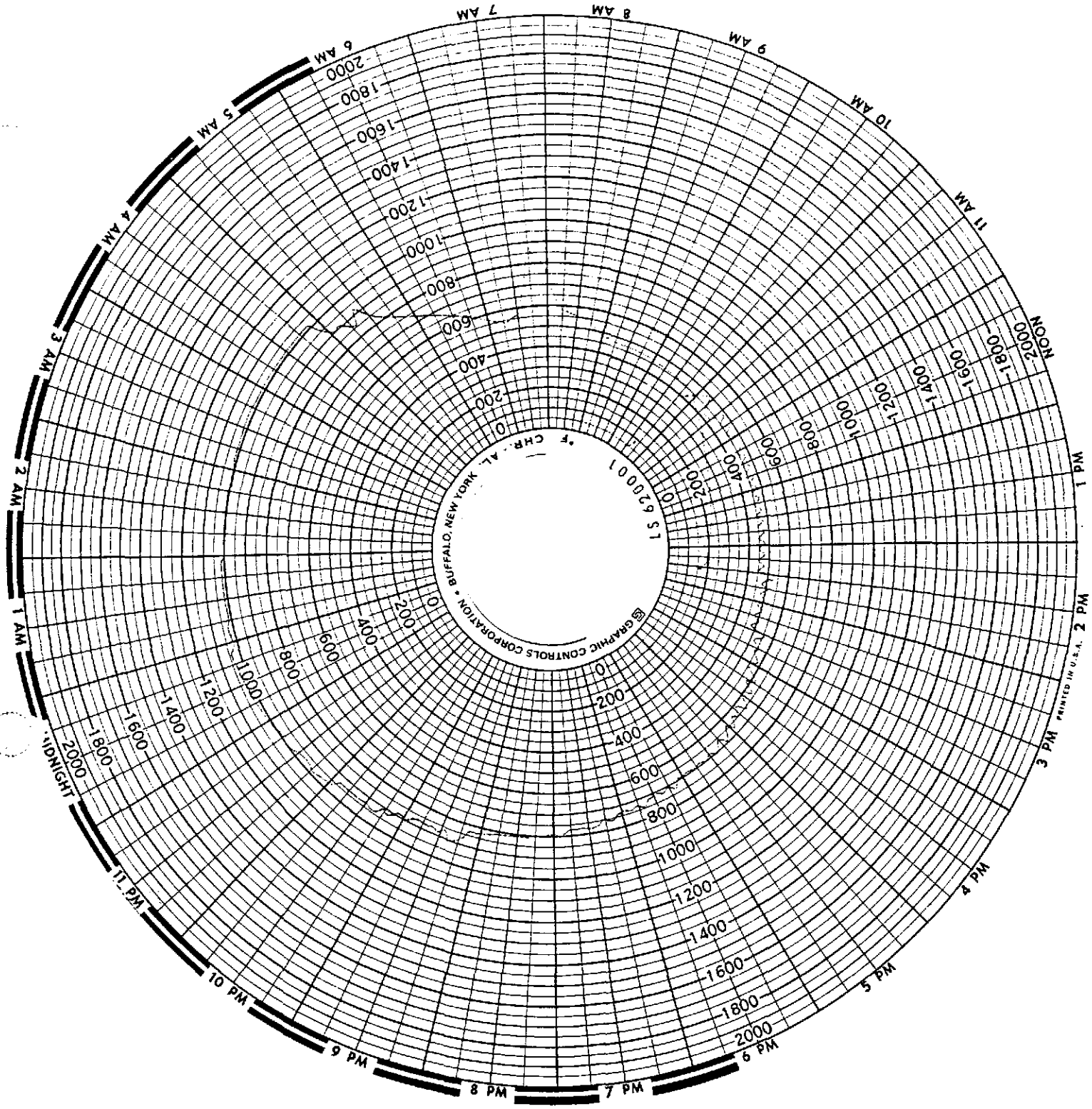

RANOR, INC.

Cust: PST

P.O.: 555822

Date: 5/6/97 S.O. 7300-9

Chg: 2557 Prog. 20EI

WE CERTIFY THAT THIS IS A TRUE COPY OF ORIGINAL HEAT CHART

Q.C. DEPT.

90

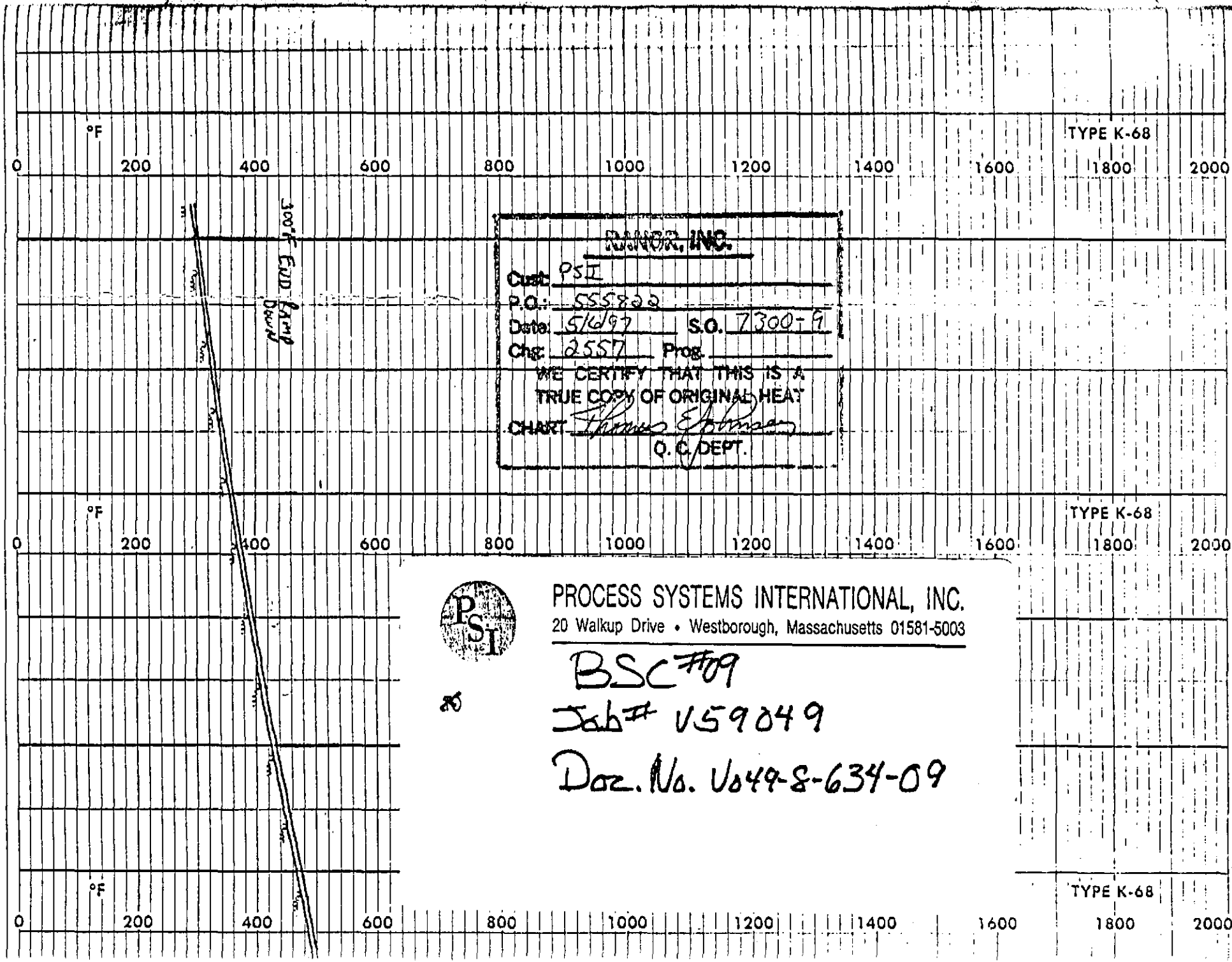
°F
0
200
400
600
800
1000
1200
1400
1600
1800
2000
TYPE K-68
300°F End Ramp Down
RANOR, INC.
Cust: PSI
P.O.: 555822
Date: 5/6/97
S.O. 7300-9
Chg: 2557
Prog.
WE CERTIFY THAT THIS IS A TRUE COPY OF ORIGINAL HEAT CHART
Thomas E. Johnson
Q. C. DEPT.
PROCESS SYSTEMS INTERNATIONAL, INC.
20 Walkup Drive • Westborough, Massachusetts 01581-5003
BSC #09
Job # V59049
Doc. No. V049-8-634-09

#4

NYSPAN Metal Bellows

N/A

TAG# WBSC1 S/N09 BSC 9

Title

SPECIFICATION FOR CLEANING PROCEDURE

Attachment

LIGO COMPONENT CLEANING DATA SHEET

Project V59049

Component	Serial Number
BSC Bottom	
014 ①	
014 ②	
TEST DEOL	192
A-15 Spool	186

Wash Cycle: Manual

Flowrates: 30 GPM Max. Temp.: 146° Duration: 9 hrs

Operator: MARK / Bill Date: 7-2-97

Comments:

Component(s) Inspected By: [signature] Date: 7/2/97

Quality Assurance: [signature] Date: 7-2-97

Comments:

Number

Rev.

SPECIFICATION

Number A V049-2-015 Rev. 2

11/88

LIGO DATA SHEET
MANUAL WASH STATION

PART DESCRIPTION: WBSC#1 Bottom S/N: 9 WORK ORDER: 125
DATE/TIME: 1-3-97
OPERATOR: Mark Bell

NOTE:REMOVE ALL TIE RODS PRIOR TO WASHING

1.FILL D.I. WATER TANK XD-103 TO MARK.HEAT D.I. WATER USING PUMP XP-103 AND HTR.XP-102 TO 150.F. TI925= 146 °F

2.FILL POWER WASHER TANK WITH A 50% SOLUTION OF IMPRO CLEAN 1300 AND D.I. WATER. MIX 1:1 Done

3.APPLY SOAP SOLUTION TO ALL COMPONENT SURFACES WITH LARGE YELLOW NOZZLE IN POWER WASHER WAND AND SIPHON TUBE IN THE POWER WASHER TANK.

4.HAND SCRUB SURFACES WITH NYLON BRUSH WHERE NEEDED.

5.REMOVE SIPHON TUBE FROM TANK AND INSTALL GREEN NOZZLE INTO WAND.

6.POWER WASH COMPONENT. ALL SURFACES SLOWLY COVERED AT LEAST TWICE. WASH TIME = 120 MIN

7.POWER RINSE COMPONENT. ALL SURFACES SLOWLY COVERED AT LEAST TWICE. RINSE TIME= 60 MIN

8.REMOVE EXCESS WATER WITH VACUUM OR CLEAN AIR WAND.

9.ALLOW COMPONENT TO DRY BEFORE MOVING TO CLEAN ROOM. DRY TIME= 90 MIN

NOTES:

Title: BSC 9 Bottom

SPECIFICATION
Number A V049-2-184 Rev. 1
Page 2 of 2

Number Rev

LIGO DATA SHEET
MANUAL WASH STATION

PART DESCRIPTION: BSC TOP S/N: 119 WORK ORDER: 125
DATE/TIME: 7-8-99
OPERATOR: MARK JIMMY MNT

NOTE:REMOVE ALL TIE RODS PRIOR TO WASHING

1.FILL D.I. WATER TANK XD-103 TO MARK.HEAT D.I. WATER USING PUMP XP-103 AND HTR.XP-102 TO 150.F. TI925= 145 °F

2.FILL POWER WASHER TANK WITH A 50% SOLUTION OF IMPRO CLEAN 1300 AND D.I. WATER. MIX 1:1 Done

3.APPLY SOAP SOLUTION TO ALL COMPONENT SURFACES WITH LARGE YELLOW NOZZLE IN POWER WASHER WAND AND SIPHON TUBE IN THE POWER WASHER TANK.

4.HAND SCRUB SURFACES WITH NYLON BRUSH WHERE NEEDED.

5.REMOVE SIPHON TUBE FROM TANK AND INSTALL GREEN NOZZLE INTO WAND.

6.POWER WASH COMPONENT. ALL SURFACES SLOWLY COVERED AT LEAST TWICE. WASH TIME = 90 MIN

7.POWER RINSE COMPONENT. ALL SURFACES SLOWLY COVERED AT LEAST TWICE. RINSE TIME= 10 MIN

8.REMOVE EXCESS WATER WITH VACUUM OR CLEAN AIR WAND.

9.ALLOW COMPONENT TO DRY BEFORE MOVING TO CLEAN ROOM. DRY TIME= 120 MIN

NOTES: _____

Title: BSC9 TOP

SPECIFICATION
Number A V049-2-184
Rev. 1
Page 2 of 2

Number | Rev.

TITLE	TEST ARTICLE PARAMETERS PUMPDOWN LOG
DATE:	
TIME:	
TEST I.D.: e.g. WBSC1_1	WBSC1-1
PSI TEST ENGINEER:	
QUALITY ASSURANCE:	

PHYSICAL DIMENSIONS				
S.S. SURFACE AREA		ft^2		cm^2
VITON LINEAL LENGTH		inches		cm
VOLUME		ft^3		liters
PUMPDOWN	TIME		PRESSURE	
5/14	2305	hr:min	1.7×10^{-6}	Torr
5/15	805	hr:min	1.7×10^{-5}	Torr
	1040	hr:min	1.6×10^{-5}	Torr
5/16	1105	hr:min	6.7×10^{-6}	Torr
	1900	hr:min	5.9×10^{-6}	Torr
5/18	700	hr:min	5.7×10^{-9}	Torr
		hr:min		Torr
		hr:min		Torr
		hr:min		Torr
		hr:min		Torr
		hr:min		Torr
		hr:min		Torr
		hr:min		Torr
		hr:min		Torr
		hr:min		Torr
		hr:min		Torr
		hr:min		Torr
		hr:min		Torr
		hr:min		Torr
		hr:min		Torr

TITLE	BAKE OUT TEMPERATURE LOG
DATE:	
TIME:	
TEST I.D.: e.g. WBSC1_1	WBSC1_1
PSI TEST ENGINEER:	
QUALITY ASSURANCE:	

BAKEOUT LOG / DATE	TIME		TEMPERATURE		ANAFAZE
5/14	2230	hr:min	25	°C	START
	2305	hr:min	85.8°F	°C	100°C
5/15	805	hr:min	243°F	°C	140°C
	1040	hr:min	289°F	°C	165°C
5/16	1115	hr:min	320°F	°C	165°C
	1900	hr:min	320°F	°C	165°C
5/18	700	hr:min	76°F	°C	60°C
		hr:min		°C	
		hr:min		°C	
		hr:min		°C	
		hr:min		°C	
		hr:min		°C	
		hr:min		°C	
		hr:min		°C	
		hr:min		°C	
		hr:min		°C	
		hr:min		°C	
		hr:min		°C	
		hr:min		°C	
		hr:min		°C	
		hr:min		°C	

5/18 7:00 SHUT DOWN ANAFAZE + OVEN

TITLE	RGA ION SOURCE SETTINGS SHEET
DATE:	
TIME:	
TEST I.D.: e.g. WBSC1_1	
PSI TEST ENGINEER:	
QUALITY ASSURANCE:	

RGA NUMBER:	
RGA SENSOR HEAD SERIAL # QMS	0747621010
RGA ELECTRONICS UNIT SERIAL # QME	13

Type	CH-TRON
Channel	0 ENABLE

IS-TYPE:	HS-THOR.

Detector	
Type	CH-TRON
SEM Volt.	<< 1700>>

Amplifier	
Offset	ON

RF-Polarity	inverse
IS-Voltages	[V]
IonRef	138
Cathode	90.0
Focus	9.38
Field Axis	5.75
Extract	12

Mass	
Mode	SCAN-N
First	
Width	
Speed	
Resolution	
Threshold	

Ion Source	
Filament #	
IS-Set	
IS-Emission	
Emiss [mA]	
Protect [A]	3.5

Fil.Prot.	Thresh. [mbar]
ON Pressure	
OFF above	

SPECIFICATION	
Number: V049-2-127 A	Rev 1

TITLE	RGA SCAN PARAMETER FILE SETTINGS
DATE:	
TIME:	
TESTI.D.: e.g. WBSC1_1	
PSI TEST ENGINEER:	
QUALITY ASSURANCE:	
RGA NUMBER:	
RGA SENSOR HEAD SERIAL # QMS	V010
RGA ELECTRONICS UNIT SERIAL # QME	13

PARAMETER FILE: LIGO200.SAP

Load-Ch:00	CH-0	
State	ENABLE	
Det. Type	CH-TRON	
Mass Mode	SCAN-F	
First Mass	0.00	

Detector

EM Voltage	1700	

Mass

Speed	5 s	
Width	200	
Resolution	25	
Threshold	1E-15	

Amplifier

Amp. Mode	AUTO	
Amp. Range	---	
Range-L	---	
Pause - Cal.	1.0	
Offset	ON	

PARAMETER FILE: LIGO200.SBP

Load-Ch:00	CH-0	
State	ENABLE	
Det. Type	CH-TRON	
Mass Mode	SCAN-F	
First Mass	0.00	

SEM Voltage	1700	

Speed	5 s	
Width	200	
Resolution	25	

Amp. Mode	AUTO	
Amp. Range	---	
Range-L	---	
Pause - Cal.	1.0	
Offset	ON	

OUTPUT: User discretion
DISPLAY: User discretion

TITLE	OUTGASSING RATES REPORT SHEET
DATE:	
TIME:	
TESTI.D.: e.g. WBSC1_1	
PSI TEST ENGINEER:	
QUALITY ASSURANCE:	

RGA NUMBER:	
RGA SENSOR HEAD SERIAL # QMS	V010
RGA ELECTRONICS UNIT SERIAL # QME	13

AMU	I (Amp)	Leak rate Torr-L/s	F_{amu} Sensitivity Factor wrt N2	I with leak (Amp)	Gas load sensitivity Torr-L/s-A	Q Torr-L/s	q Torr-L/s-cm^2
H2	2.36×10^{-8}	$4.8X10^{-6}$		4.8×10^{-8}	200		
12			0.42				
14			0.5				
15			0.54				
CH4	$5X6^{-10}$		0.57			$3.5 X10^{-7}$	$6 X10^{-13}$
17			0.6				
H2O	$59 X10^{-9}$		0.64			$43 X10^{-6}$	$8 X10^{-12}$
19			0.67				
26			0.71				
28	6.98×10^{-10}	$9.5X10^{-7}$		1.2×10^{-9}	922	$6.4 X10^{-7}$	$1.2 X10^{-12}$
32	$3.8 X10^{-11}$		1.14				
38			1.36				
40	1.3×10^{-11}	$9.4X10^{-8}$		1.1×10^{-10}	940	$9.4 X10^{-9}$	$1.7 X10^{-14}$
43			1.53				
44	$3.2 X10^{-10}$		1.57			$3.7 X10^{-7}$	$7 X10^{-13}$
129	1.2×10^{-12}	$2.5X10^{-8}$		1.8×10^{-11}	1388		$3.7 X10^{-14}$
131	7.0×10^{-13}	$2.0X10^{-8}$		1.7×10^{-11}			
132	1.0×10^{-12}	$2.5X10^{-8}$					
134	1.0×10^{-12}	$1.0X10^{-8}$					
OTHER	$2.4 X10^{-10}$				922	$2.2X10^{-9}$	$5 X10^{-13}$

ITLE	OUTGASSING RATES REPORT SHEET
DATE:	
TIME:	
TESTI.D.: e.g. WBSC1_1	WBSC1_1
PSI TEST ENGINEER:	
QUALITY ASSURANCE:	

RGA NUMBER:	
RGA SENSOR HEAD SERIAL # QMS	~~0008~~ V010
RGA ELECTRONICS UNIT SERIAL # QME	13

AMU	I (Amp)	Leak rate Torr-L/s	F_{amu} Sensitivity Factor wrt N2	I with leak (Amp)	Gas load sensitivity Torr-L/s-A	Q Torr-L/s	q Torr-L/s-cm^2
39							
41							
47							
51							
55							
60							
63							
67							
69							
77							
81							
91							
95							
105							
107							
115							
152							
183							
199							
TOTAL	3.08×10^{-10}				922	2.2×10^{-9}	5×10^{-13}

AGE: TEST I.D. FILENAME: XXXXXXXX.SAC

TITLE	RGA COMPUTER DATA FILE LOG
DATE:	
TIME:	
TESTI.D.: e.g. WBSC1_1	WBSC1_1
PSI TEST ENGINEER:	
QUALITY ASSURANCE:	

RGA NUMBER:	
RGA SENSOR HEAD SERIAL # QMS	V010
RGA ELECTRONICS UNIT SERIAL # QME	13

BARGRAPH DATA FILE NAME WBSC1-1.SBC

ANALOG SCAN DATA FILE NAME WBSC1_1.SAC

OTHER DATA FILES

PRINTOUT OF

1. LAST ANALOG SCAN BEFORE CALIBRATION
2. ANALOG SCAN WITH CALIBRATED LEAK OPEN
3. BARGRAPH PLOT

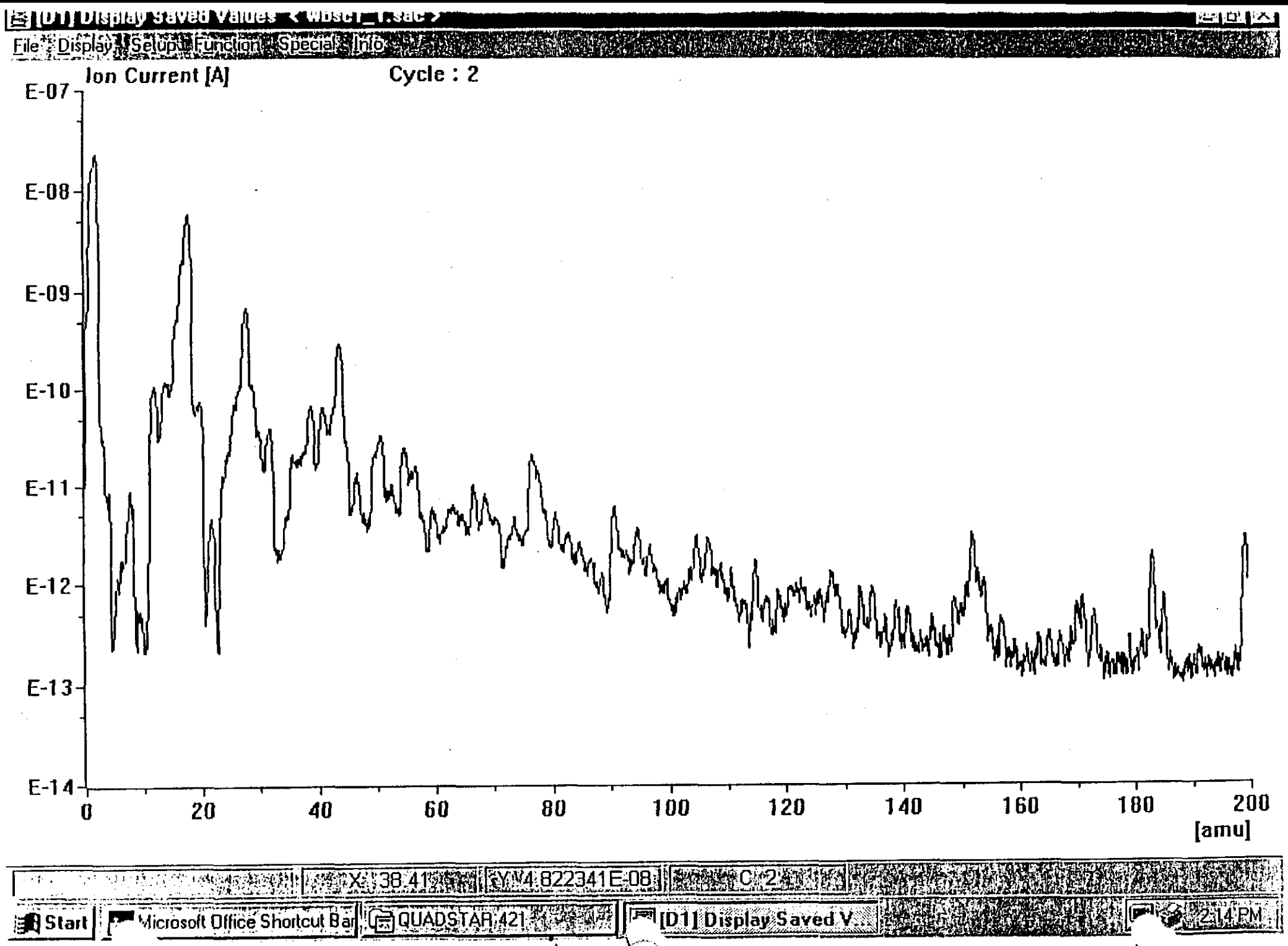
[D1] Display Saved Values < WBSCT_1.sac >
File Display Setup Function Special Info SV
Ion Current [A]
Cycle : 2
E-07
E-08
E-09
E-10
E-11
E-12
E-13
E-14
0
20
40
60
80
100
120
140
160
180
200
[amu]
X: 38.41
Y: 4.822341E-08
C: 2
Start
Microsoft Office Shortcut Bar
QUADSTAR 421
[D1] Display Saved V...
2:14 PM

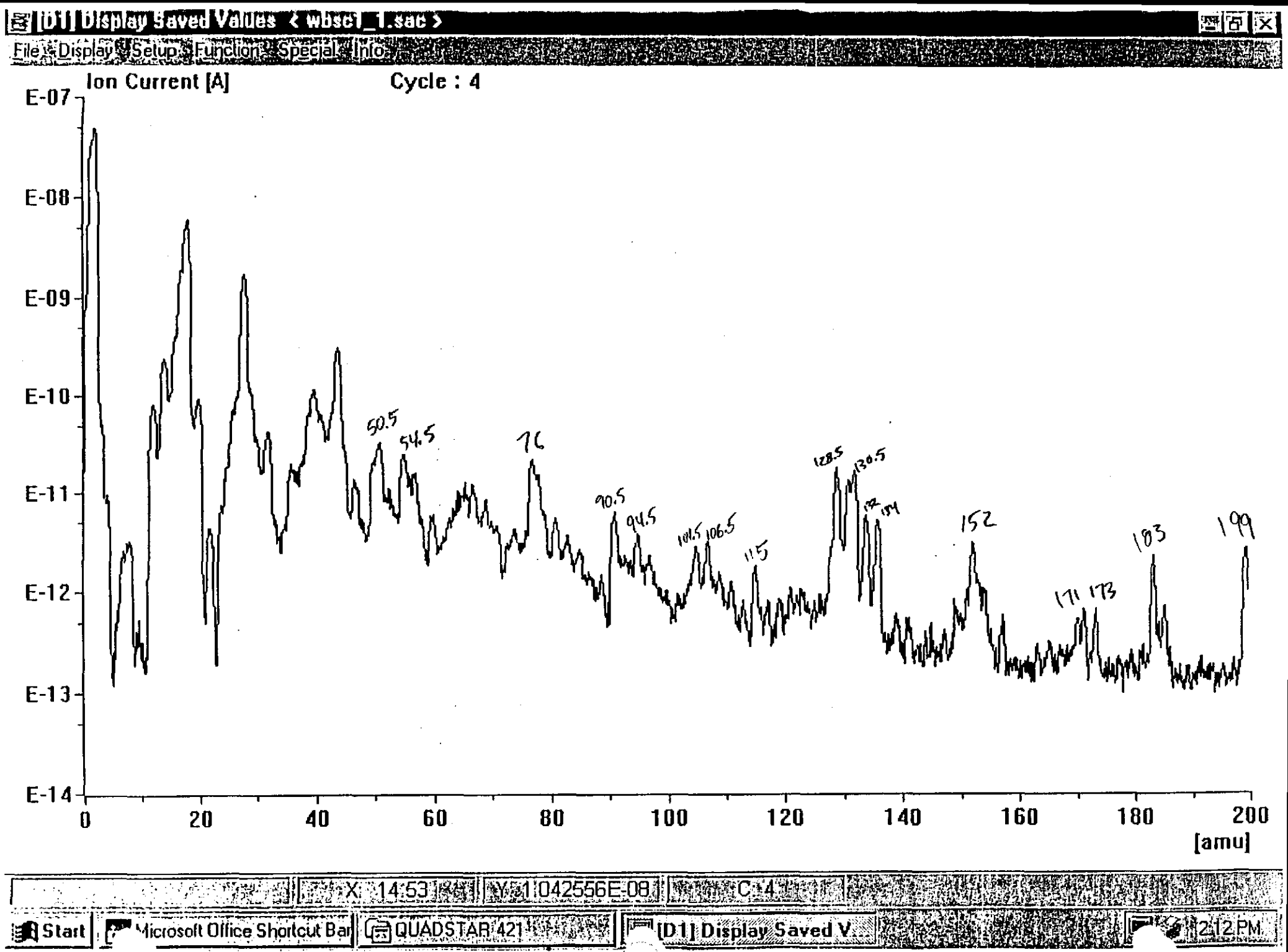
[D1] Display Saved Values < wbsc1_1.sac >
File Display Setup Function Special Info
Ion Current [A]
Cycle : 4
E-07
E-08
E-09
E-10
E-11
E-12
E-13
E-14
0
20
40
60
80
100
120
140
160
180
200
[amu]
50.5
54.5
76
90.5
94.5
104.5
106.5
115
128.5
130.5
132
134
152
171
173
183
199
X: 14:53
Y: 1.042556E-08
C: 4
Start
Microsoft Office Shortcut Bar
QUADSTAR 421
[D1] Display Saved V...
12:12 PM

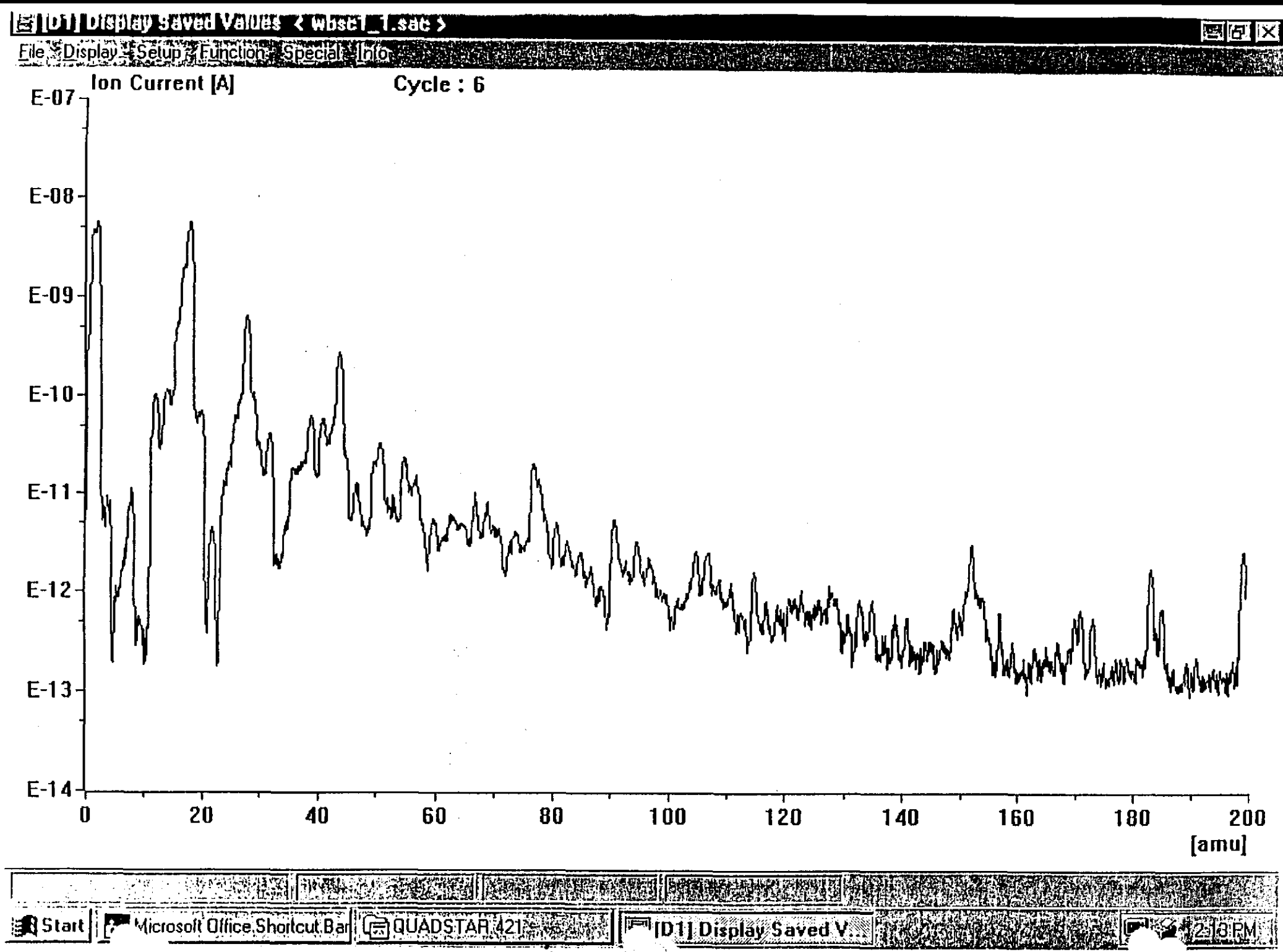
[D1] Display Saved Values < wbsc1_1.sac >
File Display Setup Function Special Info
Ion Current [A]
Cycle : 6
E-07
E-08
E-09
E-10
E-11
E-12
E-13
E-14
0
20
40
60
80
100
120
140
160
180
200
[amu]
Start
Microsoft Office Shortcut Bar
QUADSTAR 421
[D1] Display Saved V...
2:13 PM

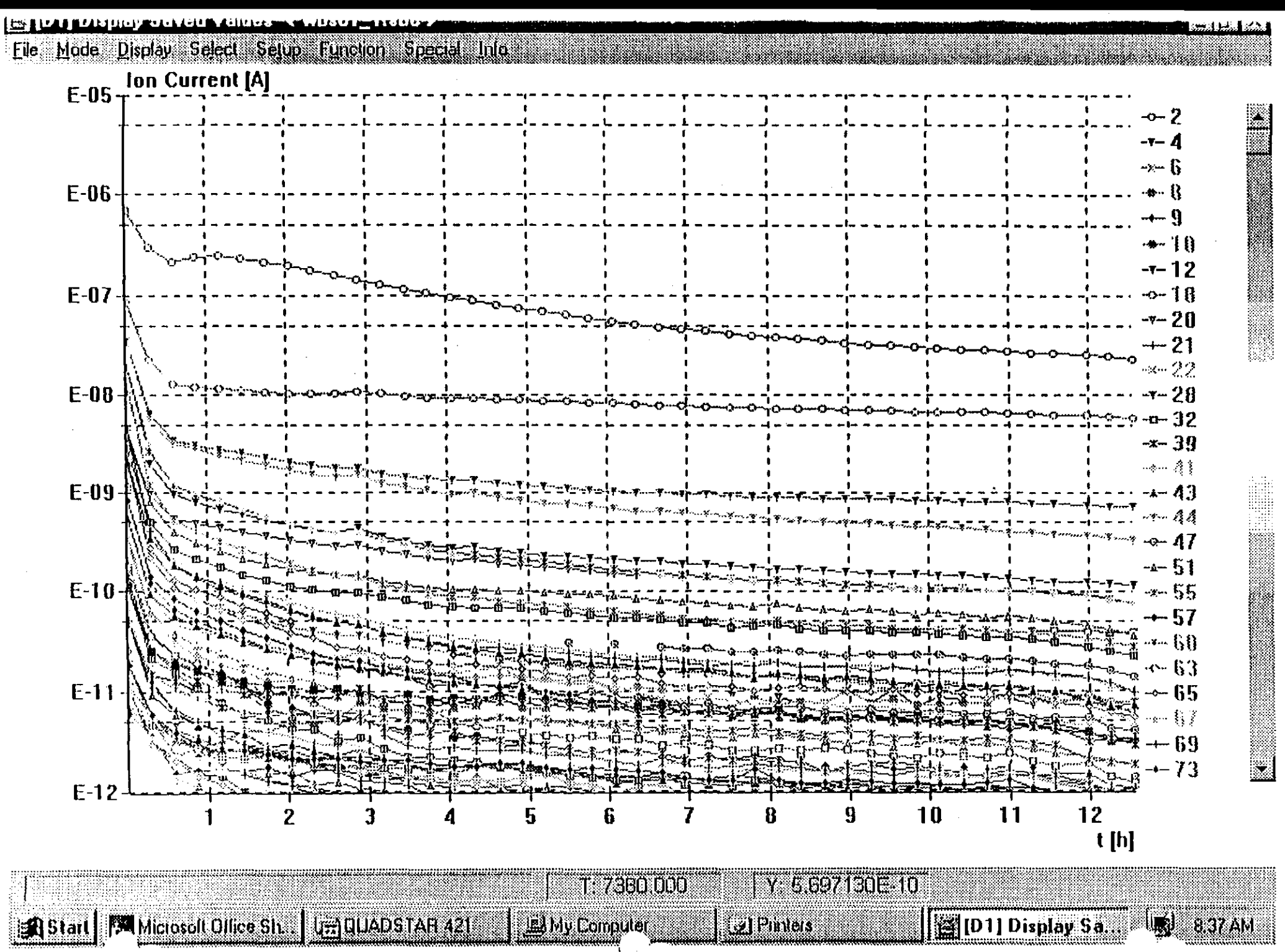
File Mode Display Select Setup Function Special Info
Ion Current [A]
E-05
E-06
E-07
E-08
E-09
E-10
E-11
E-12
1 2 3 4 5 6 7 8 9 10 11 12
t [h]
2 4 6 8 9 10 12 16 20 21 22 28 32 39 41 43 44 47 51 55 57 60 63 65 67 69 73
T: 7360.000
Y: 5.697130E-10
Start
Microsoft Office Sh...
QUADSTAR 421
My Computer
Printers
[D1] Display Sa...
8:37 AM

SCAN BARGRAPH CYCLES : WDSC1_1.SDC

CYC: 44 5/18/97 6:00:24 AM:86 TIC: 3.105877E-08[A]

m/e	Intensity[A]	m/e	Intensity[A]	m/e	Intensity[A]	m/e	Intensity[A]
1.97	2.363460E-08	4.25	5.764112E-12	7.84	7.622112E-12	11.88	1.124791E-10
17.88	5.905611E-09	21.78	4.735939E-12	27.84	6.982845E-10	31.81	3.833115E-11
38.84	7.499697E-11	40.84	7.311263E-11	43.78	3.215922E-10	46.78	1.373426E-11
50.81	3.596275E-11	54.78	2.751133E-11	59.75	6.316969E-12	63.28	6.846225E-12
66.53	1.049071E-11	68.81	9.544518E-12	76.81	2.217828E-11	80.84	5.338831E-12
90.81	7.113306E-12	94.94	4.026576E-12	104.81	3.173503E-12	106.81	3.275662E-12
110.91	1.413387E-12	114.78	1.883286E-12	116.84	9.576437E-13	118.69	9.416225E-13
122.97	1.091742E-12	128.13	1.183772E-12	130.94	7.002562E-13	132.97	1.071717E-12
134.97	1.005797E-12	136.97	4.794532E-13	139.00	7.128641E-13	140.97	7.137998E-13
145.19	4.268586E-13	147.09	4.225105E-13	148.94	7.299376E-13	151.94	3.050498E-12
156.97	5.774677E-13	159.25	2.800896E-13	160.97	2.526307E-13	163.09	3.226650E-13
164.84	3.792956E-13	167.25	3.491934E-13	171.22	6.481337E-13	173.25	6.177958E-13
179.34	2.465446E-13	183.09	1.844259E-12	185.16	6.976587E-13	191.31	2.686411E-13
199.28	2.851013E-12						

~~2.35×10^{-10} A~~

.73

3.08×10^{-10} A

Process Systems International, Inc.

DISCREPANCY REPORT

ROUTE TO Seneca L / Bagley

D.R. NUMBER 4761

JOB NUMBER	P.O. NO.	VENDOR	SHEET
9049		RANOR / BSC LOWER SERIAL #01 DRW# V049-4-003	1 OF 2
CT: LIGO.		ORIGINATOR: P. FERLAND	DATE: 1/9/97

REFER TO D.R. NUMBER

ITEM	DWG. ZONE	DISCREPANCIES (LIST CHARACTERISTICS, SPECIFICATIONS AND ACTUAL)	NO. ACC.	FOR REVIEW	QTY. OF PCS./DISPOSITION: USE NO. CHGE	USE DWG. CHGE	RWK IN SHOP	RET. TO SUP.	SCRAP	REMARKS
1		KNIFE EDGES ON THE FOLLOWING CF'S HAVE BURRS: 8" CF'S BETWEEN 0°+90°, 1-14" CF @ 90°, 1-8" CF BETWEEN 180°+270°;								
2		5/8" ANNULUS PUMP PORT LOCATED ON THE "B" NOZZLES IS POSITIONED 48° INB WRONG WAY.								
3		ITEM #21 8" LONG INTERNAL BARS HAVE A LOCATION DIM. OF 6 1/4" OFF WELD SEAM. STARTING AT 0° INBY MEASURE 6 9/16 90° = 6 5/8", 180° = 6 11/16", 270° = 6 3/4"								
		MOST OF INB CF NOZZLE TO SHELL WELDS NEED SOME TYPE OF TOUCH-UP. (WELD UNDER CUTTING ON EDGE OF SHELL, DEBURRING, WELD BURN THROUGH.)								

DISPOSITION ---

1) NEED INSPECTION REPORT FROM RANOR FOR REMAINING CONFLATS IN RANORS POSESSION

2) DRILL 5/8" PORT IN CORRECT LOCATION, PLUG WELD LORING HOLE WITH MACHINED PLATE 304 L WITH CMTR'S P.S.I TO ADD INFORMATION ON DRAWINGS TO CLARIFY 60" FLANGES TO CORRECT ORIENTATION.

3) PSI TO CHANGE DIMENSIONING OF LOWER INTERNAL BRACKET FROM WELD LINE TO CENTER OF 60" NOZZLES.

4) RANOR TO REPAIR

5) RANOR TO REPAIR

6) RANOR TO IDENTIFY.

SIGNATURE Phil Ferland DATE 1/15/97

DISPOSITION CONCURRENCE

PROJECT MGR.	DATE	MFG. ENG.	DATE	QUALITY ASSURANCE	DATE
[signature]	1/17/97	Phillip Ferland	1/15/97	[signature]	1-16-97

REINSPECTION

SIGNATURE DATE

CORRECTIVE ACTION ---

SIGNATURE DATE

AI/ANI _____ DATE _____

Process Systems International, Inc.

DISCREPANCY REPORT

ROUTE TO _____

D.R. NUMBER 4761

JOB NUMBER	P.O. NO.	VENDOR	SHEET 2 OF 2
ECT	ORIGINATOR	DATE	REFER TO D.R. NUMBER

ITEM	DWG. ZONE	DISCREPANCIES (LIST CHARACTERISTICS, SPECIFICATIONS AND ACTUAL)	NO. ACC.	FOR REVIEW	QTY. OF PCS./DISPOSITION: USE NO. CHGE	USE DWG. CHGE	RWK IN SHOP	RET. TO SUP.	SCRAP	REMARKS
5		ON THE WELDS FOR THE 60" NOZZLES TO SHELL OR NOZZLES TO FLANGE, THERE ARE SEVERAL LOCATIONS THAT WELD WIRE DID NOT MELT COMPLETELY AND LEFT SMALL EDGES OR SPIKES.								
6		THE LOWER SHELL HAD NO SERIAL # VISIBLY MARKED.								

DISPOSITION ---

SEE PAGE 1

SIGNATURE DATE

DISPOSITION CONCURRENCE

PROJECT MGR.	DATE	MFG. ENG.	DATE	QUALITY ASSURANCE	DATE
[signature]	1/17/92				

REINSPECTION

SIGNATURE DATE

CORRECTIVE ACTION ---

SIGNATURE DATE

AI/ANI _____ DATE _____

RANOR, INC

NONCONFORMANCE REPORT

FORM QA 12.1 REV. 6 (07/30/96)

NCR NUMBER NCR- 1029 | PAGE 1 OF 1 | SKETCH ATTACHED ☐

JOB NUMBER	CUSTOMER	PURCHASE ORDER NUMBER	QUANTITY
7300 F/M	P.S.I.	555822-00	1

PART DESCRIPTION	DOCUMENT NUMBER AND REVISION	SERIAL NUMBER
LIGO BSC Lower Shell Assy.	A V049-2-046 Rev. Ø	7300-1

CODE/SPECIFICATION: ☐ ASME SECTION III ☐ SAFETY RELATED ☐ ASME SECTION VIII ☐ MIL SPEC ☒ COMMERCIAL

DESCRIPTION OF NONCONFORMANCE

ITEM	REQUIREMENT	NONCONFORMANCE
1	Heat Treat Ramp-Up @ 100°F/hr max.	1. Ramp up @ 180°/hr. from 350 to 530°F
	starting at 350°F; Ramp-Down	Ramp up @ 130°/hr. from 600° to 730°F
	@ 100°F/hr max. ending at	Ramp Dn @ 115°/hr. from 1015° to 900°F
	300°F	Ramp Dn @ 120°/hr from 725° to 605°F
2	Temp. of vessel to be monitored by	Ramp Dn @ 135°/hr from 500° to 365°F
	recording with K thermocouple attached.	2. Multiple parts were processed without identification of parts to thermocouples.

REMARKS: —

ROUTING SHEET IDENTIFIED WITH NCR NO. AND DATE OF ISSUE: BY — DATE: —

ORIGINATOR/INSPECTOR: Steve Robbins DATE: 3-27-97

RESPONSIBILITY FOR NONCONFORMANCE

☐ VENDOR ☐ DESIGN ☐ MATERIAL ☐ CUTTING ☐ FORMING ☐ WELDING
☐ MACHINING ☐ INSPECTION ☐ CALIBRATION ☐ QC ☐ QA ☒ OTHER Heat Treat

TECHNICAL JUSTIFICATION/DESCRIPTION OF DISPOSITION

ITEM	TECHNICAL JUSTIFICATION	DESCRIPTION OF DISPOSITION
	Submit to PSI for Justification	No mat'l problems per
	and Written Disposition. Steve Robbins 3-27-97	discussion w/ Metallurgist.
		Use as is. R.J. Gatto
		4/14/97
		GS 4-17-97

TECHNICAL JUSTIFICATION: BY — DATE: —

DISPOSITION: BY R.J. Gatto DATE: 4/17/97

DISPOSITION OF NONCONFORMANCE:	RECOMMENDED DISPOSITION:	10CFR21 EVALUATION REQUIRED: ☐ YES ☒ NO
☐ ACCEPT AS IS ☐ USE AS IS	☐ ACCEPTED	CORRECTIVE ACTION REQUIRED: ☒ YES ☐ NO
☐ REPAIR /REWORK ☐ REJECT	☐ NOT ACCEPTED	CUSTOMER APPROVAL REQUIRED: ☒ YES ☐ NO
CONDITIONAL RELEASE: CR NO. ____		APPROVED BY: DATE

APPROVAL OF DISPOSITION:		VERIFICATION OF DISPOSITION:	
VP-ENGINEERING	DATE	ACCEPTED BY	DATE
QA MANAGER	DATE	QA MANAGER	DATE
ANI	DATE	ANI	DATE

RANOR, INC

NONCONFORMANCE REPORT

FORM QA 12.1 REV. 6 (07/30/96)

NCR NUMBER	PAGE
NCR: 1001	PAGE 1 OF 1 SKETCH ATTACHED ☐

JOB NUMBER	CUSTOMER	PURCHASE ORDER NUMBER	QUANTITY
7300 Fin	P.S.I.	S55822-00	1

PART DESCRIPTION	DOCUMENT NUMBER AND REVISION	SERIAL NUMBER
LIGO Vacuum Chamber	Dwg. V049-4-101 Rev. O	7300-1

CODE/SPECIFICATION: ☐ ASME SECTION III ☐ SAFETY RELATED ☐ ASME SECTION VIII ☐ MIL SPEC ☒ COMMERCIAL

DESCRIPTION OF NONCONFORMANCE

ITEM	REQUIREMENT	NONCONFORMANCE
1	It. 4 Upper Shell to It. 6	Actual weld was laid out
	Upper Flange to have intermit-	and welded using a
	tent fillet weld 3/16" 2-4	3/16" 3-6 spacing.
	spacing per WDS-35	

REMARKS: _____

ROUTING SHEET IDENTIFIED WITH NCR NO. AND DATE OF ISSUE: BY _____ DATE: 1-6-97

ORIGINATOR/INSPECTOR: _____ DATE: 1-6-97

RESPONSIBILITY FOR NONCONFORMANCE

☐ VENDOR ☐ DESIGN ☐ MATERIAL ☐ CUTTING ☐ FORMING ☒ WELDING
☐ MACHINING ☐ INSPECTION ☐ CALIBRATION ☐ QC ☐ QA ☐ OTHER _____

TECHNICAL JUSTIFICATION/DESCRIPTION OF DISPOSITION

ITEM	TECHNICAL JUSTIFICATION	DESCRIPTION OF DISPOSITION
	Submit to P.S.I. for	MAKE 3-6 SPACING TO
	tech. justification and	4-6 SPACING. ADD 1" OF
	written disposition.	WELD TO EACH. ANY DISTORTION
	1-6-97	WILL BE FIXED BY RANOR AT
		NO COST TO P.S.I.

TECHNICAL JUSTIFICATION:

X BY RAY CIATTO /RCT DATE: 1/7/97

DISPOSITION: REWORK AS SHOWN

BY R. Bayly DATE: 1/7/97

DISPOSITION OF NONCONFORMANCE:	RECOMMENDED DISPOSITION:	10CFR21 EVALUATION REQUIRED: ☐ YES ☒ NO
☐ ACCEPT AS IS ☐ USE AS IS	☐ ACCEPTED	CORRECTIVE ACTION REQUIRED: ☐ YES ☒ NO
☐ REPAIR /REWORK ☐ REJECT	☐ NOT ACCEPTED	CUSTOMER APPROVAL REQUIRED: ☒ YES ☐ NO
CONDITIONAL RELEASE: CR NO. _____		APPROVED BY: DATE

APPROVAL OF DISPOSITION:		VERIFICATION OF DISPOSITION:	
VP-ENGINEERING	DATE	ACCEPTED BY	DATE
QA MANAGER	DATE	QA MANAGER	DATE
ANI	DATE	ANI	DATE

RAMOR, INC

NONCONFORMANCE REPORT

FORM QA 12.1 REV. 6 (07/30/96)

NCR NUMBER	PAGE
NCR- 1003	PAGE 1 OF 3 SKETCH ATTACHED ☑

JOB NUMBER	CUSTOMER	PURCHASE ORDER NUMBER	QUANTITY
7300 Fm	P.S.I.	S55822-00	1

PART DESCRIPTION	DOCUMENT NUMBER AND REVISION	SERIAL NUMBER
BSC OVERALL ASSY LIGO VAC	V049-4-101	UNIT 1

CODE/SPECIFICATION: ☐ ASME SECTION III ☐ SAFETY RELATED ☐ ASME SECTION VIII ☐ MIL SPEC ☒ COMMERCIAL

DESCRIPTION OF NONCONFORMANCE

ITEM	REQUIREMENT	NONCONFORMANCE
1	48° ORIENTATION OF 5/8 Φ PORT	LOCATED FROM THE WRONG SIDE
	SHEET 1 ZONE B-4	OF THE CENTER LINE
2	48.437 ±0.075 ZONE B-7	RANGES F/ -.054 to +.938
		SEE ATTACHED MAP #1
3	90.875 ±0.075 ZONE B-7	RANGES F/ -.068 to NOMINAL
		SEE ATTACHED MAP #2

REMARKS:

ROUTING SHEET IDENTIFIED WITH NCR NO. AND DATE OF ISSUE: BY N/A DATE: N/A

ORIGINATOR/INSPECTOR: [signature] DATE: 1-6-97

RESPONSIBILITY FOR NONCONFORMANCE

☐ VENDOR ☐ DESIGN ☐ MATERIAL ☐ CUTTING ☐ FORMING ☐ WELDING
☐ MACHINING ☐ INSPECTION ☐ CALIBRATION ☐ QC ☐ QA ☐ OTHER

TECHNICAL JUSTIFICATION/DESCRIPTION OF DISPOSITION

ITEM	TECHNICAL JUSTIFICATION	DESCRIPTION OF DISPOSITION
	SEND TO CUSTOMER FOR DISPOSITION	① RELOCATE HOLE BY DRILLING + PLUG
		EXISTING HOLE (2 PLCS.)
		② CORRECT FIXTURING TO HAVE NOZZLES TO
		BE WITH IN TOLERANCE. P.S.I TO EXCEPT
		UNIT "AS IS"

TECHNICAL JUSTIFICATION: DISPOSITION:

BY [signature] DATE: 2/6/97 BY DATE

DISPOSITION OF NONCONFORMANCE:	RECOMMENDED DISPOSITION:	
☐ ACCEPT AS IS ☐ USE AS IS	☐ ACCEPTED	10CFR21 EVALUATION REQUIRED: ☐ YES ☐ NO
☐ REPAIR /REWORK ☐ REJECT	☐ NOT ACCEPTED	CORRECTIVE ACTION REQUIRED: ☐ YES ☐ NO
CONDITIONAL RELEASE: CR NO.		CUSTOMER APPROVAL REQUIRED: ☐ YES ☐ NO
		APPROVED BY: DATE

APPROVAL OF DISPOSITION:		VERIFICATION OF DISPOSITION:	
VP-ENGINEERING	DATE	ACCEPTED BY	DATE
QA MANAGER	DATE	QA MANAGER	DATE
ANI	DATE	ANI	DATE

[signature] 2/6/97

MAP #1 NCR 1003 7300 F/m UNIT

1-10-97

2 of 3

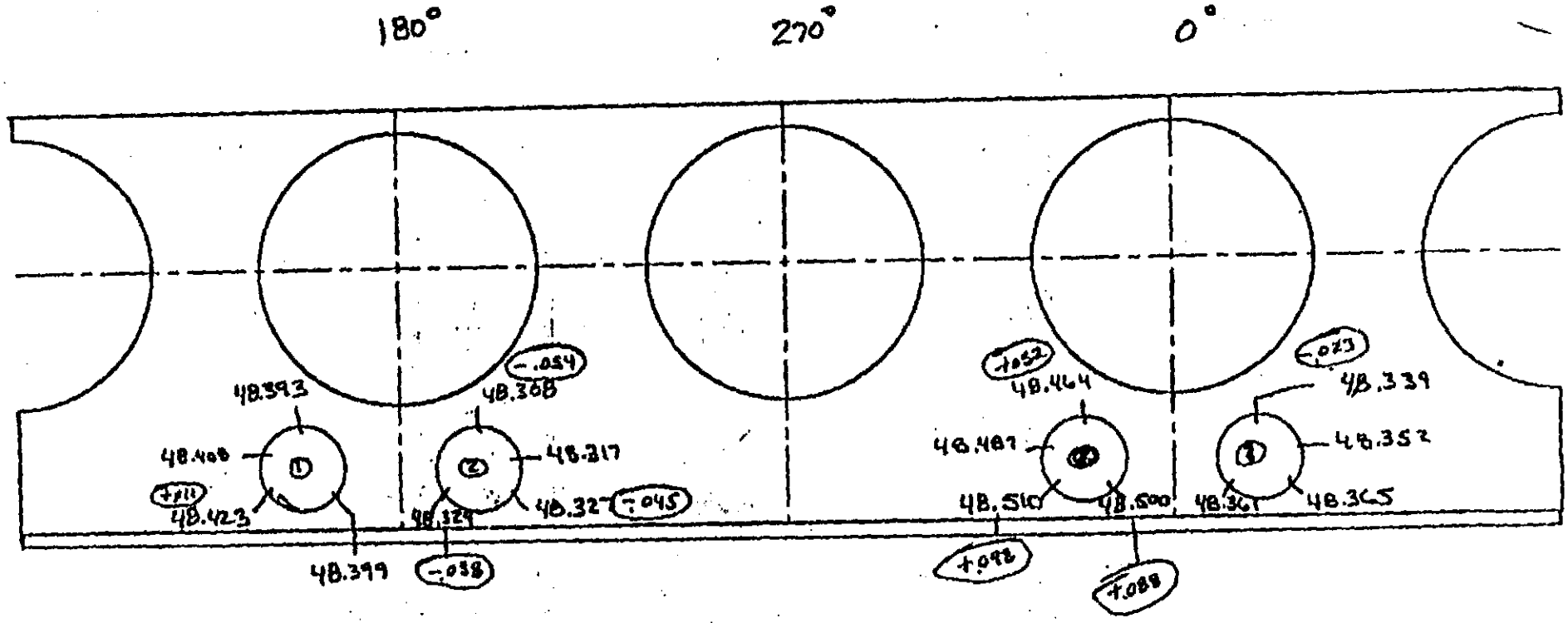

48.437 ± .075

48.362 MIN

48.412 MAX

MAP 2 NCR# 1003 7300 F/M

UNIT #1

KJC 1-10-97

3 of 3

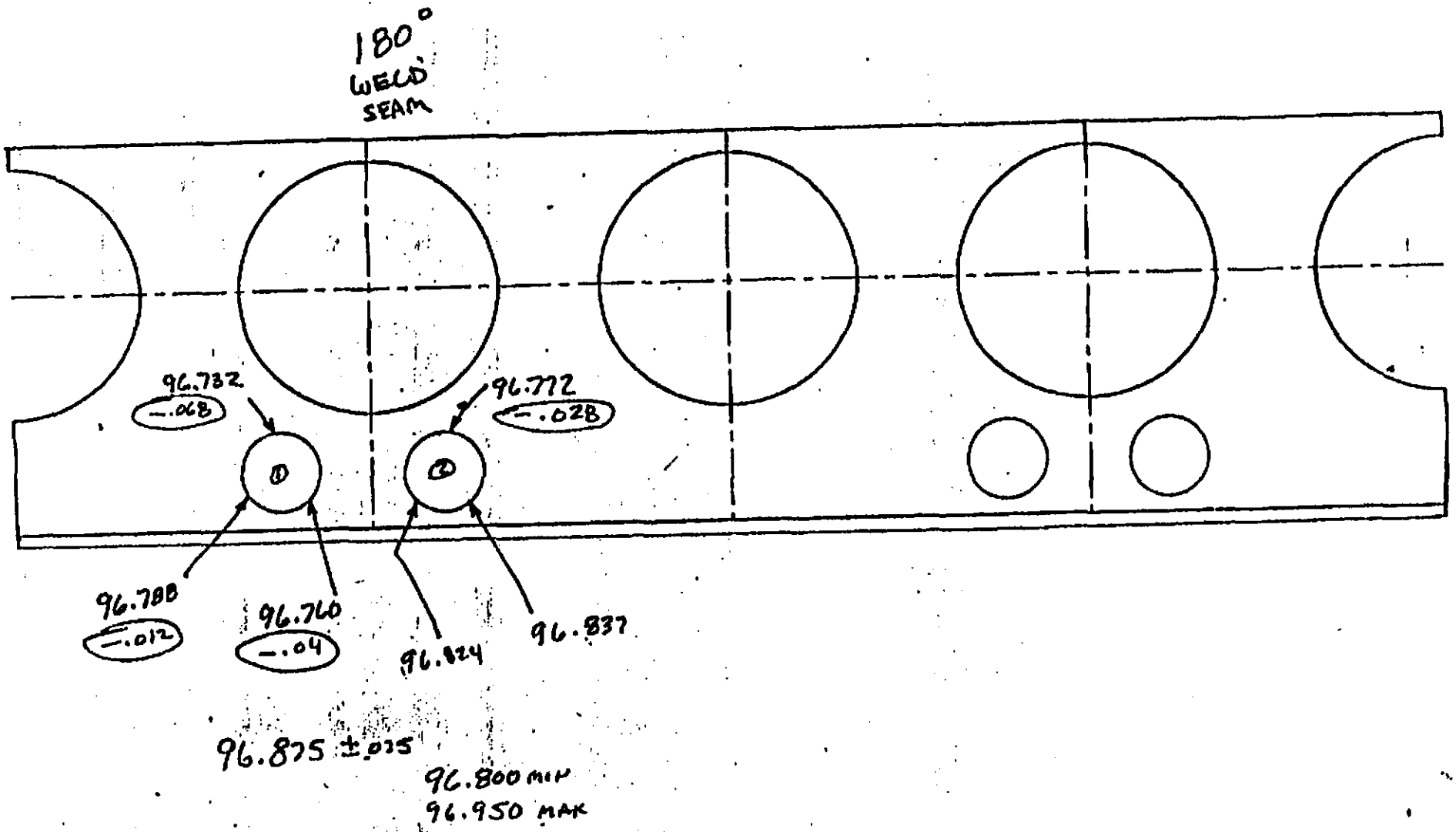

RANOR, INC

CORRECTIVE ACTION REQUEST (CAR)

FORM QA 13.1 REV. 4 (10/02/96)

Issued To:	Date of Issue:	Issued By/Date:	CAR No.: 1005
MACH SHOP	1-13-97		NCR No. 1005
Subject/Reference: NCR 1005	CAR Result of: Audit ( ) Inspection/Test ( )	Document Reference and Revision: V049-4-028 REV-7	Job No.: 7310M

RESPONSE DATE

DEVIATION:

MISC FLAWS ON RING.

CAUSE

IT APPEARS AN ORDER OF RINGS WHERE SHIPPED FROM RANOR PREMATURLY AND MAY HAVE BEEN IMPROPERLY PACKAGED.

CORRECTIVE ACTION TO BE IMPLEMENTED:

ONCE AN ORDER IS READY FOR SHIPMENT Q.C. WILL VERIFY INSPECTIONS HAVE BEEN COMPLETED AND PACKAGING IS SECURE.

ACTION TAKEN TO PRECLUDE RECURRENCE

CAR Follow-up: PLEASE COPY TO FAB SHOP IE: JACK B

TARGET DATE FOR COMPLETION: Date: 1-14-97

Department Manager: _____ Date: 1-14-1997

QA Approval: _____ Date: 1/14/97

ANI Final Review: _____ Date: _____

CAR SUMMARY:
CAR Closed ( )
CAR Remains Open ( )

PROCESS SYSTEMS INTERNATIONAL, INC.
20 Walkup Drive, Westborough, MA 01581

LIGO PROJECT

CALIFORNIA INSTITUTE OF TECHNOLOGY
MASSACHUSETTS INSTITUTE OF TECHNOLOGY

Table of Contents

TAG # WBSC - 2
P/N – VO49-4-003 S/N-02

1	C of C to applicable codes and standards Material test reports for shells, heads and large flanges. C of C for nozzles, small, parts and flanges.	
2	Vendor Quality Plan Doc. Package.	
3	Heat-Treat Charts (by Ranor) when applicable.	
4	Final Cleaning Certificate.	
5	Bakeout Certificate. Final Vacuum Test Report. Acceptance Test Data.	
6	Non Conformance Reports. Use as is, when applicable.	
7	As Built Drawings/Dimensions.	

PROCESS SYSTEMS INTERNATIONAL, INC.
20 Walkup Drive, Westborough, MA 01581

CALIFORNIA INSTITUTE OF TECHNOLOGY ~ LIGO PROJECT
MASSACHUSETTS INSTITUTE OF TECHNOLOGY

CERTIFICATE OF CONFORMANCE

CUSTOMER:	The LIGO Project California Institute of Technology Mail Stop 18-34 Pasadena, CA 91125
DATE:	12/16/97
CONTRACT ORDER NUMBER:	PC 175730
PSI JOB NUMBER:	V59049
DRAWING NUMBER(S):	V049 4 003
TAG NUMBER:	WBSC 2
SERIAL NUMBER:	02
ITEM:	Refer to attached Material Tracer Record
APPLICABLE SPECIFICATION(S):	SA-240 A-500 SA-193 B7 SA-194 2H F-436

PSI certifies that the items furnished in this shipment have been manufactured from the materials and in accordance with the process test and acceptance criteria requirements specified within the drawing(s) and/or specification(s) listed above. All inspection records and test results are on file with PSI and are available for examination.

Gene Senecal 12/16/97
Gene Senecal
Quality Assurance Engineer

Material Tracer Record

Part Number WBSC 2 S/N 02

Item #	Qty	U/M	Part code	Description	C of C MIC # CMTR
5	1	EA	202667 3	FLANGE SST304L COFC CONFLAT BLANK 10 OD NON ROT. .332 DIA THRU 24 HOLES EQ. SP. ON A 9.128 DIA B.C.	C of C
6	1	EA	202671 3	GASKET COP OFHC COFC CONFLAT 10 OD FLANGE	C of C
7	24	EA	V049M777	BOLT SST 18-8 HEX HD 5/16 -18 X2-1/2 LG.	C of C
8	24	EA	V049M782	NUT SILICON BRZ HEX 5/16 -18	C of C
9	48	EA	V049M785	WASHER SST 18-8 FLAT 5/16	C of C
4	1	EA	V0494142P1 3	FLANGE SST304L COFC CONFLAT REDUCING PER DETAIL A DWG V049-4-142 WITH 4 1/2X 2 1/2 CONFLAT NIPPLE BLANK GASKET AND HARDWARE WITH 2 3/4 X 1 1/2 CONFLAT NIPPLE BLANK GASKET AND HARDWARE	C of C
5	1	EA	V0494142P2 3	FLANGE SST304L COFC CONFLAT REDUCING PER DETAIL B DWG V049-4-142 WITH 4 1/2X 2 1/2 CONFLAT BORE AND TAPPED HOLES WITH 4 1/2X2 1/2 CONFLAT BLANK GASKET AND HARDWARE	C of C
9	490	EA	V049M777	BOLT SST 18-8 HEX HD 5/16 -18 X2-1/2 LG.	C of C
10	490	EA	V049M782	NUT SILICON BRZ HEX 5/16 -18	C of C
11	980	EA	V049M785	WASHER SST 18-8 FLAT 5/16	C of C
12	1	EA	V049M307 3	FLANGE SST304L COFC CONFLAT NON-ROTATABLE 2-3/4 OD BLANK	C of C
13	1	EA	V049M751 3	GASKET OFHC COP COFC 2-3/4 OD CONFLAT PER SPEC V049-2-037/T4	C of C
14	6	EA	V049M775	BOLT SST 18-8 HEX HD 1/4-20 X 1-1/2	C of C

Material Tracer Record

Part Number WBSC 2 S/N 02

15	6	EA	V049M781	NUT SILICON BRZ HEX 1/4-20	C of C
16	12	EA	V049M784	WASHER SST 18-8 FLAT 1/4	C of C
31	10	EA	202666 3	FLANGE SST304L COFC CONFLAT BLANK 16-1/2 OD NON ROT. .390 DIA THRU 36 HOLES EQ. SP. ON A 15.310 DIA B.C.	C of C
32	6	EA	202549 3	FLANGE SST304L COFC CONFLAT 12 OD BLANK NON ROT. .332 DIA THRU HOLES 32 PLACES EQ. SP. ON A 11.181 DIA. B.C.	C of C
33	12	EA	202667 3	FLANGE SST304L COFC CONFLAT BLANK 10 OD NON ROT. .332 DIA THRU 24 HOLES EQ. SP. ON A 9.128 DIA B.C.	C of C
37	12	EA	202670 3	GASKET COP OFHC COFC CONFLAT 16-1/2 OD FLANGE	C of C
38	6	EA	202552 3	GASKET COP OFHC COFC CONFLAT 12 OD FLANGE	C of C
39	12	EA	202671 3	GASKET COP OFHC COFC CONFLAT 10 OD FLANGE	C of C
40	440	EA	V049M780	BOLT SST 18-8 HEX HD 3/8 -16 X3 LG	C of C
43	1	EA	V049M016	O'RING VITON A500 BAKED .275 NOM X 337-1/2 LG VULCANIZED	C of C
44	1	EA	V049M017	O'RING VITON A500 BAKED .275 NOM X 328-1/8 LG VULCANIZED	C of C
45	4	EA	V049M023	O'RING VITON A500 BAKED .275 NOM X 191-1/4 LG VULCANIZED	C of C
46	4	EA	V049M022	O'RING VITON A500 BAKED .275 NOM X 200-5/8 LG VULCANIZED	C of C
47	120	EA	202678 3	BOLT STL SA193 B7 COFC HEX HD 7/8-9 UNC X 4 LG ZINC PLATED .0002 MIN THK.CLEAR CHROMATE PROCESS	C of C
48	120	EA	202679 3	NUT STL SA194 2H COFC HEX HD 7/8-9 UNC ZINC PLATED .0002 MIN THK CLEAR CHROMATE PROCESS	C of C

Material Tracer Record

Part Number WBSC 2 S/N 02

49	240	EA	202581 3	WASHER STL ASTM F436 COFC 1-3/4 ODX15/16 IDX1/4 THK ELECTROLESS NICKEL PLATED	C of C
50	440	EA	V049M783	NUT SILICON BRZ HEX 3/8 -16	C of C
51	880	EA	V049M786	WASHER SST 18-8 FLAT 3/8	C of C
2	1	EA	V0494025	BSC ANNULUS PIPING	C of C
3	1	EA	V0494122	BSC 75 ION PUMP SUPPORT	C of C
1	17	FT	C848510-08X08	TUBE A500 GR B SQ .625X8 X8	C of C
2	28	FT	V049M146	TUBE STL GR B A500 .500X8 X4	C of C
4	5	FT	C388316-14	BAR A36 FL 1X14	C of C
6	1.3	SF	V049P8304	PLATE STL A36 1/4 THK	C of C
1	16	FT	V049M452 1	TUBE A269 304L CMTR 1-1/2OD X .065 WT PER SPEC V049-2-037/T4	C of C
2	16	FT	V049M451 1	TUBE A269 304L CMTR 1 ODX .065 WT PER SPEC V049-2-037/T4	C of C
3	2	EA	V049M502 3	ELBOW SST304L 90DEG 1-1/2ODX .065WT BTWLD COFC PER SPEC V049-2-037/T4	C of C
7	1	EA	V049M551 3	TEE SST304L CofC BTWLD 1-1/2ODX.065 WT	C of C
8	2	EA	V049M602 3	REDUCER SST304L COFC CONC BTWLD 1-1/2 ODX 3/4 ODX.065 WT PER SPEC V049-2-037/T4	C of C
15	2	EA	V049M552 3	TEE SST304L COFC BW 1 ODX .065 WT PER SPEC V049-2-037/T4	C of C
18	1	EA	V049M302 3	FLANGE SST304L COFC CONFLAT ROTATABLE 2-3/4 OD X 1-1/2 ID PER SPEC V049-2-037/T4	C of C
25	1	EA	V0494203	ANNULUS TUBE SUPPORT ASSY	C of C

Material Tracer Record

Part Number WBSC 2 S/N 02

1	1	EA	V049M001 1	HEAD SST304L SA240 CMTR ASME FLGD & DISHED 104.5 ID .344 MIN THK (3/8 NOM. THK) 105 DISH RAD 6-1/2 INSIDE CORNER RAD WITH 2 S.F. APPROX OVERALL HEIGHT 20.08 COLD FORMED-DIP PICKLED	A 546
3	1	EA	V049P7801 14	PLATE SST GR304/304L SA240 CMTR 1/2 X91-1/2 X333 PER SPEC V0492041	A 529
4	1	EA	V049P7802 14	PLATE SST GR304/304L SA240 CMTR 1/4 X60 X332 LG PER SPEC V0492041	A 534
5	1	EA	V049M003 1	FLANGE SST F304L SA182 CMTR FORGED BLANK ASME CODE 1992 EDITION THRU 1994 ADDENDA MACHINED TO 1-1/2 +.06 THK 112-1/2 +.06 ODX104.25 -.06 ID FINISH 250/500 PER SPEC V0492040	A 780
6	1	EA	V049M004 1	FLANGE SST F304L SA182 CMTR FORGED BLANK ASME CODE 1992 EDITION THRU 1994 ADDENDA MACHINE TO 1-1/4 +.06 THK 112-1/2 +.06 ODX104.25 -.06 ID FINISH 250/500 PER SPEC V0492040	A 774
7	4	EA	V049M135 1	FLANGE SST F304L SA182 CMTR FORGED BLANK ASME CODE 1992 EDITION THRU 1994 ADDENDA MACHINE TO 1-5/8 +.06 THK 68-1/2+.06 OD X 60.0 -.06 ID FINISH 250/500 PER SPEC V0492040	A 754 A 760 A 766 A 750
9	8	EA	V049M309 3	FLANGE SST304L COFC HALF NIPPLE CONFLAT NON ROT. 16-1/2 ODX14 OD TUBEX.120WT 5 OVERALL HEIGHT .390 DIA THRU 36 HOLES EQ.SP. ON A 15.310 DIA B.C.	C of C
10	6	EA	V049M311 3	FLANGE SST304L COFC HALF NIPPLE CONFLAT NON ROT. 12 OD X 10 OD TUBEX.120WT 5 OVERALL HEIGHT .332 DIA THRU 32 HOLES EQ. SP. ON A 11.181 DIA B.C.	C of C

Material Tracer Record

Part Number WBSC 2 S/N 02

11	12	EA	V049M320 1	FLANGE SST304L CMTR HALF NIPPLE CONFLAT NON ROT. 10 ODX8 OD TUBE X .250 WT 5 OVER	C of C
12	1	EA	V049P7803 14	PLATE SST GR304/304L SA240 CMTR 1/2 X72 X195 LG PER SPEC V0492041 CMTR REQUIRED	A 486 A 489 A 490
13	4	EA	V049M324 3	FLANGE SST304L COFC HALF NIPPLE CONFLAT NON ROT. 16-1/2 ODX14 ODTUBEX.120WT 16-1/2 OVERALL HEIGHT .390 DIA THRU 36 HOLES EQ. SP. ON A 15.310 DIA B.C.	C of C
14	1	EA	V049M010 1	HEAD SST304L SA240 CMTR ASME FLGD & DISHED 104.5 ID .344 MIN THK (3/8 NOM. THK) 105 DISH RAD 6-1/2 INSIDE CORNER RAD WITH 2 S.F. APPROX OVERALL HEIGHT 20.08 COLD FORMED-DIP PICKLED	A 556
15	30	FT	V0494001P17 1	BAR SST304 SA276 CMTR FL CMTR .375X4	C of C
16	2	EA	V049M880 1	PLATE SST304 SA240 CMTR .75 THK X 36 X 20	C of C
17	30	FT	V0494001P18 1	ANGLES (L) SST 304 CMTR .250X4	C of C
18	1	EA	V0494001P19 1	PLATE SST304L SA240 CMTR 1/2 THK X 20-1/2 DIA (MAKE FROM 60 PORT CUT OUT SLUG V049P7801 14)	C of C
19	2	EA	V0494001P21 14	PLATE SST304L SA240 CMTR 1/2 THK NOTE: (QTY 2 -USE DROP FROM P/N V049P7801 14) CMTR REQUIRED	C of C
20	4	EA	V0494001P15 14	PLATE SST304L SA240 CMTR 1/2 THK NOTE:(QTY 4 - USE DROP FROM P/N V049P7801 14)	C of C
21	25	FT	C387706-1D 1	BAR SA479 304L CMTR FL .375X1.5	C of C
22	2	FT	V0494003P22 1	BAR SST 304/304L SA240 CMTR CMTR FL 1/4 X 2.5	C of C

Material Tracer Record

Part Number WBSC 2 S/N 02

47	55	EA	202678 3	BOLT STL SA193 B7 COFC HEX HD 7/8-9 UNC X 4 LG ZINC PLATED .0002 MIN THK.CLEAR CHROMATE PROCESS	C of C
48	55	EA	202679 3	NUT STL SA194 2H COFC HEX HD 7/8-9 UNC ZINC PLATED .0002 MIN THK CLEAR CHROMATE PROCESS	C of C
49	115	EA	202581 3	WASHER STL ASTM F436 COFC 1-3/4 ODX15/16 IDX1/4 THK ELECTROLESS NICKEL PLATED	C of C
50	2	EA	V0494001P50 14	PLATE SST304L SA240 CMTR 1/2 THK (NOTE QTY 2 - USE DROP FROM P/N V049P7801 14) CMTR REQUIRED	C of C
51	28	EA	V049M126 1	BAR SST304 SA479 CMTR FL .50 X2.0	C of C
52	4	FT	V049M127 1	BAR SST304 SA479 CMTR FL CMTR .375 X2.0	C of C
55	4	SF	V049M130 14	PLATE SST304 SA240 CMTR 1/2 THK CUT FROM DROP NOTE: (QTY 4 SF – USE DROP FROM P/N V049P7803 14)	C of C
63	1	EA	V0494003P63 14	PLATE SST304 SA240 CMTR 1/2 THK CUT FROM DROP V049P7801 14	C of C
64	4	EA	V049M501 3	ELBOW SST304L 90DEG 1 ODX.065 WT BTWLD COFC PER SPEC V049-2-037/T4	C of C
65	4	EA	V049M601 3	REDUCER SST304L COFC CONC BTWLD 1 ODX 3/4 ODX.065 WT PER SPEC V049-2-037/T4	C of C
66	2	EA	V049M601 3	REDUCER SST304L COFC CONC BTWLD 1 ODX 3/4 ODX.065 WT PER SPEC V049-2-037/T4	C of C
67	2	EA	V049M605 3	ELBOW SST304L COFC 45 DEG BTWLD 3/4 OD X .035WT	C of C
68	6	EA	V049M508 3	ELBOW SST304L COFC 90 DEG BW 3/4 OD X .065 WT PER SPEC V049-2-037/T4	C of C

Tel: 717-248-4911

STANDARD STEEL

A Division of FREEDOM FORGE Corporation

FOR: PROCESS SYS INT MA

CUSTOMER ORDER NUMBER 555492

REPORT DATE: 08/28/96

PCS SHIPPED: - 4 -

02 OUR ORDER NO 532691602

SHIPLIST NO: 56362

PSI MIC NO. A774

PRODUCT

RING V049M004-1
MACHINE 250/500 MICRO TO SIZES SHOWN: 112.5" OD +.06 X 104.25" ID -.06 X 1.25" WD +.06
SPECIFICATION: ASME SA182 GRADE F304L IN ACCORDANCE WITH PROCESS SYSTEMS SPEC.
AV049-2-040 REV 6

CUSTOMER

PROCESS SYSTEMS INTERNATIONAL, INC.
20 WALKUP DRIVE
WESTBOROUGH MA 01581
ATTENTION:

CHEMICAL ANALYSIS

HEAT NO.	C	SI	P	MN	S	NI	CR	MO	V	AL	TI				
09279	.031	.48	.033	1.78	.002	11.72	18.82					N .0530			

MECHANICAL PROPERTIES

HEAT NUMBER	SERIAL NUMBER	BRINELL	TEN TEMP (F)	TEN BHN	TENSILE LOCATION	UTS (KSI)	YIELD ST (KSI) .20XOFST	X ELONG	XRED AREA	IMPACT LOCATION	IMPACT TEMP (F)	IMPACT FT. LBS	IMPACT X SHR	IMPACT LAT EXP	GRN SZE
09279	6I1022A		+75		PROLONG	74.5	37.0	61.0	81.0						
09279	6I1022B														
09279	6I1022C														
09279	6I1022D														

TYPE OF HEAT TREATMENT: SOLUTION TREATED AND QUENCHED

PROCESS SYSTEMS INT'L., INC.
Reviewed this report and it complies with (SA)SB-182 Gr. 304L
95 Edition, ____ Addenda
By C. Wotecki Date 10-1-96

3

Tel: 717-248-4911

STANDARD STEEL

A Division of FREEDOM FORGE Corporation

FOR: PROCESS SYS INT MA
CUSTOMER ORDER NUMBER 555492
REPORT DATE: 08/28/96

PCS SHIPPED: 4
01 OUR ORDER NO 532691601
SHIPLIST NO: 56360

PRODUCT

RING
MACHINE 250/500 MICRO TO SIZES SHOWN: 112.5" OD +.06 X 104.25" ID -.06 X 1.50" WD +.06 V049M003-1
SPECIFICATION: ASME SA182 GRADE F304L IN ACCORDANCE WITH PROCESS SYSTEMS SPEC.
AV049-2-040 REV 6

PSI MIC NO. A780

CUSTOMER

PROCESS SYSTEMS INTERNATIONAL, INC.
20 WALKUP DRIVE
WESTBOROUGH MA 01581
ATTENTION:

CHEMICAL ANALYSIS

AT NO.	C	SI	P	MN	S	NI	CR	MO	V	AL	TI				
S09279	.031	.48	.033	1.78	.002	11.72	18.82					N .0530			

MECHANICAL PROPERTIES

HEAT NUMBER	SERIAL NUMBER	BRINELL	TEN TEMP (F)	TEN BHN	TENSILE LOCATION	UTS (KSI)	YIELD ST (KSI) .20%OFST	% ELONG	%RED AREA	IMPACT DATA LOCATION	TEMP (F)	FT. LBS	% SHR	LAT EXP	GRN SZE
S09279	6G2853A		+75		PROLONG	74.5	37.0	61.0	81.0						
S09279	6G2853B														
S09279	6G2853C														
S09279	6G2854C														

TYPE OF HEAT TREATMENT: SOLUTION TREATED AND QUENCHED

PROCESS SYSTEMS INT'L., INC.
Reviewed this report and it complies with SA/SB- 182 Gr. 304L
95 Edition, ____ Addend
By C Wotcicki Date 10-2-96

PSI MIC NO. **A534**

Avesta Sheffield

IT-2

Avesta Sheffield Plate Inc.

Certificate of Analysis and Tests

OUR ORDER 84645 - 11 HEAT & PIECE 39361-2E 8/29/96

SOLD TO: PROCESS SYSTEMS INTERNATIONAL
20 WALKUP DRIVE
WESTBOROUGH MA 01581

SHIP TO: PROCESS SYSTEMS INTERNATIONAL
20 WALKUP DRIVE
WESTBORO MA 01581
737001-01

---------- YOUR ORDER & DATE ----------

555-477 6/17/96

---------- ITEM DESCRIPTION ----------

HEAT & PIECE 39361 - 2E
WEIGHT 1549
FINISH 1
GRADE 304L / 304 UNS-S30403 / UNS-S30400
DIMENSIONS .250 X 60.125 X 332.312 EXACT

---------- SPECIFICATIONS ----------

V049-2-041 REV0 WITH EXCEPTS
ASTM A480-94B, ASME SA480-95
COUPONS REQUIRED
ASTM A262-93 PRAC A

ASTM A240-95B, ASME SA240-95
NO GRIP MARKS-NO WELD REPAIR
ASTM A262-93 PRAC E

PLATES & TEST PCS SOLUTION ANNEALED @ 1950 DEGREES FARENHEIT MINIMUM.
THEN WATER COOLED OR RAPIDLY COOLED BY AIR
FREE OF MERCURY CONTAMINATION
HOT ROLLED, ANNEALED & PICKLED (HRAP)

---------- MECHANICAL & OTHER TESTS ----------

HARDNESS RB	84
YIELD STRENGTH (PSI)	43373
TENSILE STRENGTH (PSI)	84880
BEND	OK
INTERGRANULAR CORROSION	OK
ELONGATION % IN 2"	53.9
REDUCTION OF AREA %	72.4

---------- CHEMICAL COMPOSITION ----------

CARBON	(C)	.015
MANGANESE	(MN)	1.58
PHOSPHORUS	(P)	.027
SULFUR	(S)	.001
SILICON	(SI)	.42
CHROMIUM	(CR)	18.23
NICKEL	(NI)	8.64
COBALT	(CO)	.11
COPPER	(CU)	.48
MOLY	(MO)	.41
NITROGEN	(N)	.07

PROCESS SYSTEMS INT'L., INC.
Reviewed this report and it complies with SA/~~SB~~ 240 Gr. 304/304L
95 Edition, ___ Addenda

By A. Watoroki Date 9-5-96

KNOWINGLY & WILLFULLY FALSIFYING OR CONCEALING A MATERIAL FACT ON THIS FORM, OR MAKING FALSE, FICTITIOUS OR FRAUDULENT STATEMENTS OR REPRESENTATIONS HEREIN COULD CONSTITUTE A FELONY PUNISHABLE UNDER FEDERAL STATUTES.

A. L. TRISSLER, LAB TESTING MANAGER

PSI MIC NO. A529

Avesta Sheffield

Avesta Sheffield Plate Inc.

Certificate of Analysis and Tests

OUR ORDER 84645 - 10 HEAT & PIECE 96985-1B 8/29/96

SOLD TO: PROCESS SYSTEMS INTERNATIONAL
20 WALKUP DRIVE
WESTBOROUGH MA 01581

SHIP TO: PROCESS SYSTEMS INTERNATIONAL
20 WALKUP DRIVE
WESTBORO MA 01581
737001-01

YOUR ORDER & DATE

555-477 6/17/96

ITEM DESCRIPTION

HEAT & PIECE 96985 - 1B
WEIGHT 4605
FINISH 1
GRADE 304L / 304 UNS-S30403 / UNS-S30400
DIMENSIONS .500 X 91.812 X 333.437 EXACT

SPECIFICATIONS

V049-2-041 REV0 WITH EXCEPTS
ASTM A480-94B, ASME SA480-95
COUPONS REQUIRED
ASTM A262-93 PRAC A

ASTM A240-95B, ASME SA240-95
NO GRIP MARKS-NO WELD REPAIR
ASTM A262-93 PRAC E

PLATES & TEST PCS SOLUTION ANNEALED @ 1950 DEGREES FARENHEIT MINIMUM.
THEN WATER COOLED OR RAPIDLY COOLED BY AIR
FREE OF MERCURY CONTAMINATION
HOT ROLLED, ANNEALED & PICKLED (HRAP)

MECHANICAL & OTHER TESTS

HARDNESS RB	82
YIELD STRENGTH (PSI)	40446 ✓
TENSILE STRENGTH (PSI)	86071 ✓
BEND	OK
INTERGRANULAR CORROSION	OK
ELONGATION % IN 2"	62.8 ✓
REDUCTION OF AREA %	71.2 ✓

CHEMICAL COMPOSITION

CARBON	(C)	.015 ✓
MANGANESE	(MN)	1.51 ✓
PHOSPHORUS	(P)	.026 ✓
SULFUR	(S)	.002 ✓
SILICON	(SI)	.35 ✓
CHROMIUM	(CR)	18.22 ✓
NICKEL	(NI)	8.62 ✓
COBALT	(CO)	.14
COPPER	(CU)	.24
MOLY	(MO)	.19
NITROGEN	(N)	.07 ✓
COLUMBIUM	(CB)	.004
TITANIUM	(TI)	.010
ALUMINUM	(AL)	.003
TIN	(SN)	.013
BORON	(B)	.002

PROCESS SYSTEMS INT'L., INC.
Reviewed this report and it complies with SA/SB- 240 Gr. 304/304L
95 Edition, ____ Addenda

By C. Watarski Date 9-5-96

KNOWINGLY & WILLFULLY FALSIFYING OR CONCEALING A MATERIAL FACT ON THIS FORM, OR MAKING FALSE, FICTITIOUS OR FRAUDULENT STATEMENTS OR REPRESENTATIONS HEREIN COULD CONSTITUTE A FELONY PUNISHABLE UNDER FEDERAL STATUTES.

A. L. TRISSLER, LAB TESTING MANAGER

WASHINGTON STEEL
A LUKENS COMPANY

TEST CERTIFICATE 2 10114

CUSTOMER P.O.: 731649950306
DESCRIPTION: 1 - RECTANGLE .375 -X- 120 -X- 360

PAGE NO. ~~01~~ 02
FILE NO: 869, J3-16
DATE: 05/03/96
MILL ORDER NO: 16558-001

SOLD TO:
WILLIAMS & CO. INCORPORATED
201 PENNSYLVANIA AVENUE
PITTSBURGH PA 15233

SEND TO: 01
TEST REPORT WITH SHIPMENT

SHIP TO:
WILLIAMS & CO. INC.
7840 REINHOLD DRIVE
CINCINNATI OH 45237

PSI MIC NO. A546

THE MATERIAL HAS BEEN MANUFACTURED AND TESTED IN ACCORDANCE WITH PURCHASE ORDER REQUIREMENTS AND SPECIFICATIONS:

ILLI A240 YR 93 TYPE-304L ASTM A240 TYPE-304L
STM A240-94A TYPE 304/304L, ASME SA240 95 EDITION TYPE 304/304L, ASTM A262-93A
RACTICE A & E, ASTM A480-94B, ASTM A276-94B (CHEM & MECH PROPERTIES ONLY) TYPE 304/304L

CHEMICAL ANALYSIS

MELT/SLAB	C	MN	P	S	CU	SI	NI	CR	MO	V	TI	B	N
0985 /2C	✓	✓	✓	✓		✓	✓	✓					✓
Y0985	.016	1.51	.027	.006	.28	.49	9.05	18.20	.28				.0780
ROD ANALYSIS	.018	1.52	.027	.006	.28	.50	8.99	18.18	.29				.0810

PRACTICES: WMS. & CO. QA APPROVED MAY 08 '96 SM

TENSILES

TYPE	YLD (PSI X 100)	TENS X 100	% ELONG 2"	% R.A.
X1	408 ✓	826 ✓	72.0 ✓	54.0 ✓

CHARPY V IMPACTS

TYPE	TEMP	MILS LATERAL EXPANSION	% SHEAR

OTHER TESTS PERFORMED

BRINELL 156 TEST LOC-B
CORROSION A262E SATISFACTORY

PROCESS SYSTEMS INT'L., INC.
Reviewed this report and it complies with SA/SB 240 Gr. 304L
95 Edition, — Addenda
By C. Wozniski Date 9-9-96

INFORMATION

WEIGHT PER PIECE = 4949 LBS. 2250 KG.
NO WELD REPAIR WAS PERFORMED BY LUKENS.
MERCURY OR MERCURY COMPOUNDS ARE NOT USED IN THE
MANUFACTURE OF LUKENS'/WASHINGTON'S PRODUCTS.
** CORROSION TEST PER ASTM A262 PRACTICE A & E **
** SIZE = .3750"NOM X 120.0000"NOM X 380.0000"ACT X WGT. = 4909

HEAT TREAT CYCLES - MATL. OR TESTS - DEG FAHR.

MATL	TEST	NOM TEMP	MIN TEMP	MAX TEMP	HOLD MINS.	COOL METHOD	END TEMP
X	X	1950			0012	WQ	

HEAT TREAT CYCLES - TESTS ONLY - DEG FAHR.

START END TEMP	NOM TEMP	MIN TEMP	MAX TEMP	HOLD MINS.	HEAT RATE MAX	COOL RATE MAX

WE HEREBY CERTIFY THE ABOVE INFORMATION IS CORRECT:

Quality Assurance Laboratory
Coatesville, PA 19320

ELINORE ZAPLITNY
SUPERVISOR - TEST REPORTING.

FORM NO. 2221TW (10/93)

Avesta Sheffield

PSI MIC NO. A556

Avesta Sheffield East, Inc.

Certificate of Analysis and Tests

OUR ORDER 69430 - 01 HEAT & PIECE 36012-4A 2/20/96

SOLD TO: WILLIAMS & COMPANY
901 PENNSYLVANIA AVE
PITTSBURGH PA 15233

SHIP TO: WILLIAMS & COMPANY
7640 REINHOLD DRIVE
513-821-5555
CINCINNATI OH 45237
965001-03

---------- YOUR ORDER & DATE ----------

7059899S0306 12/21/95

---------- ITEM DESCRIPTION ----------

HEAT & PIECE 36012 - 4A
WEIGHT 5526

FINISH 1
GRADE 304L UNS-S30403
DIMENSIONS .375 X 120.000* X 402.000 EXACT

---------- SPECIFICATIONS ----------

WMS SPEC 06-210 4/16/86
NO GRIP MARKS-NO WELD REPAIR
MIL-I-45208A AMEND. 1
QQ-S-766D COND A EX P 4.5.2
ASTM A312-93 CHEM ONLY
ASTM A167-93
FREE/KNOWN LOW MELT CONTAMIN
ASTM A262-93 PRAC A

AMS 5511F EXCEPT LINE MARK
ASTM A240-95A, ASME SA240-95
ASTM A262-93 PRAC E
PDS 10710 BG
ASTM A276-92 CHEM, MECH ONLY
ASTM A480/A480M-94B

ASTM A262-93 PRAC E

PLATES & TEST PCS SOLUTION ANNEALED @ 1950 DEGREES FARENHEIT MINIMUM.
THEN WATER COOLED OR RAPIDLY COOLED BY AIR
FREE OF MERCURY CONTAMINATION
HOT ROLLED, ANNEALED & PICKLED (HRAP)

---------- MECHANICAL & OTHER TESTS ----------

HARDNESS RB	78
GRAIN SIZE	6
YIELD STRENGTH (PSI)	41300 ✓
TENSILE STRENGTH (PSI)	83200 ✓
BEND	OK
INTERGRANULAR CORROSION	OK
ELONGATION % IN 2"	61.0 ✓
REDUCTION OF AREA %	68.0

PROCESS SYSTEMS INT'L., INC.
Reviewed this report and it complies
with SA/~~SB~~ 240 Gr. 304L
95 Edition, _____ Addenda
By C. Wotcicki Date 9-11-96

---------- CHEMICAL COMPOSITION ----------

CARBON	(C)	.013 ✓	PRODUCT ANALYSIS:	(C)	.013
MANGANESE	(MN)	1.53 ✓		(MN)	1.52
PHOSPHORUS	(P)	.024 ✓		(P)	.024
SULFUR	(S)	.002 ✓		(S)	.002
SILICON	(SI)	.31 ✓		(SI)	.29
CHROMIUM	(CR)	18.50 ✓		(CR)	18.36
NICKEL	(NI)	8.77 ✓		(NI)	08.68
COBALT	(CO)	.06		(CO)	.060
COPPER	(CU)	.24		(CU)	0.24
MOLY	(MO)	.20		(MO)	0.20
NITROGEN	(N)	.06		(N)	.064

KNOWINGLY & WILLFULLY FALSIFYING OR CONCEALING A MATERIAL FACT ON THIS FORM, OR MAKING FALSE, FICTITIOUS OR FRAUDULENT STATEMENTS OR REPRESENTATIONS HEREIN COULD CONSTITUTE A FELONY PUNISHABLE UNDER FEDERAL STATUTES.

J. BONGARDT, LAB MANAGER

WMS. & CO.
Q.A APPROVED
MAR 11 '96
SM

P.O. BOX 1975
Baltimore, Maryland 21203
Telephone: (410) 522-6200
FAX # 410-522-6247

PSI MIC NO. A489

Avesta Sheffield

Avesta Sheffield East, Inc.

Certificate of Analysis and Tests

OUR ORDER 84643 - 06 HEAT & PIECE 39734-4A 8/12/96

SOLD TO: PROCESS SYSTEMS INTERNATIONAL
20 WALKUP DRIVE
WESTBOROUGH MA 01581

SHIP TO: PROCESS SYSTEMS INTERNATIONAL
20 WALKUP DRIVE
WESTBORO MA 01581
737001-01

---------- YOUR ORDER & DATE ----------

555-477 ✓ 6/17/96

---------- ITEM DESCRIPTION ----------

HEAT & PIECE 39734 - 4A ✓
WEIGHT 2121

FINISH ✓ 1 ✓
GRADE 304L / 304 UNS-S30403 / UNS-S30400
DIMENSIONS .500 ✓ X 72.187 ✓ X 195.312 ✓ EXACT

PROCESS SYSTEMS INT'L, INC.
Reviewed this report and it complies
with (SA)SB-240 Gr. 304L-304
95 Edition, — Addenda
By SS Date 8-27-96

---------- SPECIFICATIONS ----------

V049-2-041 REV0 WITH EXCEPTS
ASTM A480-94B, ASME SA480-95
COUPONS REQUIRED
ASTM A262-93 PRAC A

ASTM A240-95B, ASME SA240-95 ✓
NO GRIP MARKS-NO WELD REPAIR ✓
ASTM A262-93 PRAC E

PLATES & TEST PCS SOLUTION ANNEALED @ 1950 DEGREES FARENHEIT MINIMUM.
THEN WATER COOLED OR RAPIDLY COOLED BY AIR
FREE OF MERCURY CONTAMINATION
HOT ROLLED, ANNEALED & PICKLED (HRAP) ✓

---------- MECHANICAL & OTHER TESTS ----------

HARDNESS RB	87 ✓
GRAIN SIZE	5
YIELD STRENGTH (PSI)	42400 ✓
TENSILE STRENGTH (PSI)	84000 ✓
BEND	OK
INTERGRANULAR CORROSION	OK
ELONGATION % IN 2"	58.0 ✓
REDUCTION OF AREA %	68.0

---------- CHEMICAL COMPOSITION ----------

CARBON	(C)	.015 ✓
MANGANESE	(MN)	1.50 ✓
PHOSPHORUS	(P)	.029 ✓
SULFUR	(S)	.001 ✓
SILICON	(SI)	.39 ✓
CHROMIUM	(CR)	18.51 ✓
NICKEL	(NI)	8.58 ✓
COBALT	(CO)	.11
COPPER	(CU)	.45
MOLY	(MO)	.40
NITROGEN	(N)	.06 ✓

KNOWINGLY & WILLFULLY FALSIFYING OR CONCEALING A MATERIAL FACT ON THIS FORM, OR MAKING FALSE, FICTITIOUS OR FRAUDULENT STATEMENTS OR REPRESENTATIONS HEREIN COULD CONSTITUTE A FELONY PUNISHABLE UNDER FEDERAL STATUTES.

J. BONGARDT, LAB MANAGER

P.O. BOX 1975
Baltimore, Maryland 21203
Telephone (410) 527-6200

PSI MIC NO. A490

Avesta Sheffield

Avesta Sheffield East, Inc.

II-3

Certificate of Analysis and Tests

OUR ORDER 84643 - 06 HEAT & PIECE 39734-5A 8/12/96

SOLD TO: PROCESS SYSTEMS INTERNATIONAL
20 WALKUP DRIVE
WESTBOROUGH MA 01581

SHIP TO: PROCESS SYSTEMS INTERNATIONAL
20 WALKUP DRIVE
WESTBORO MA 01581
737001-01

---------- YOUR ORDER & DATE ----------

555-477 ✓ 6/17/96

---------- ITEM DESCRIPTION ----------

HEAT & PIECE 39734 - 5A ✓
WEIGHT 2121

FINISH ✓ 1 ✓
GRADE 304L / 304 UNS-S30403 / UNS-S30400
DIMENSIONS .500 ✓ X 72.187 ✓ X 195.312 ✓ EXACT

PROCESS SYSTEMS INT'L, INC.
Reviewed this report and it complies
with SA/SB-240 Gr. 304L-304
95 Edition, — Addenda
By SS Date 6-27-96

---------- SPECIFICATIONS ----------

V049-2-041 REV0 WITH EXCEPTS
ASTM A480-94B, ASME SA480-95
COUPONS REQUIRED
ASTM A262-93 PRAC A

ASTM A240-95B, ASME SA240-95 ✓
NO GRIP MARKS-NO WELD REPAIR ✓
ASTM A262-93 PRAC E

PLATES & TEST PCS SOLUTION ANNEALED @ 1950 DEGREES FARENHEIT MINIMUM.
THEN WATER COOLED OR RAPIDLY COOLED BY AIR
FREE OF MERCURY CONTAMINATION
HOT ROLLED, ANNEALED & PICKLED (HRAP) ✓

---------- MECHANICAL & OTHER TESTS ----------

HARDNESS RB	87 ✓
GRAIN SIZE	5
YIELD STRENGTH (PSI)	42400 ✓
TENSILE STRENGTH (PSI)	84000 ✓
BEND	OK
INTERGRANULAR CORROSION	OK
ELONGATION % IN 2"	58.0 ✓
REDUCTION OF AREA %	68.0

---------- CHEMICAL COMPOSITION ----------

CARBON	(C)	.015 ✓
MANGANESE	(MN)	1.50 ✓
PHOSPHORUS	(P)	.029 ✓
SULFUR	(S)	.001 ✓
SILICON	(SI)	.39 ✓
CHROMIUM	(CR)	18.51 ✓
NICKEL	(NI)	8.58 ✓
COBALT	(CO)	.11
COPPER	(CU)	.45
MOLY	(MO)	.40
NITROGEN	(N)	.06 ✓

KNOWINGLY & WILLFULLY FALSIFYING OR CONCEALING A MATERIAL FACT ON THIS FORM, OR MAKING FALSE, FICTITIOUS OR FRAUDULENT STATEMENTS OR REPRESENTATIONS HEREIN COULD CONSTITUTE A FELONY PUNISHABLE UNDER FEDERAL STATUTES.

J. BONGARDT, LAB MANAGER

P.O. BOX 1975
Baltimore, Maryland 21203
Telephone: (410) 522-0200

Avesta Sheffield

Avesta Sheffield East, Inc.

PSI MIC NO. **A486**

Certificate of Analysis and Tests

OUR ORDER 84643 - 06 HEAT & PIECE 39734-1A 8/12/96

SOLD TO: PROCESS SYSTEMS INTERNATIONAL
20 WALKUP DRIVE
WESTBOROUGH MA 01581

SHIP TO: PROCESS SYSTEMS INTERNATIONAL
20 WALKUP DRIVE
WESTBORO MA 01581
737001-01

---------- YOUR ORDER & DATE ----------

555-477✓ 6/17/96

---------- ITEM DESCRIPTION ----------

HEAT & PIECE 39734 - 1A✓
WEIGHT 2121

FINISH 1
GRADE 304L✓ / 304✓ UNS-S30403 / UNS-S30400
DIMENSIONS .500✓ X 72.187✓ X 195.312✓ EXACT

PROCESS SYSTEMS INT'L., INC.
Reviewed this report and it complies
with (SA)SB 240 Gr. 304L-304
95 Edition, — Addenda
By SS Date 8-27-96

---------- SPECIFICATIONS ----------

V049-2-041 REV0 WITH EXCEPTS
ASTM A480-94B, ASME SA480-95
COUPONS REQUIRED
ASTM A262-93 PRAC A

ASTM A240-95B, ASME SA240-95✓
NO GRIP MARKS-NO WELD REPAIR✓
ASTM A262-93 PRAC E

PLATES & TEST PCS SOLUTION ANNEALED @ 1950 DEGREES FARENHEIT MINIMUM.
THEN WATER COOLED OR RAPIDLY COOLED BY AIR
FREE OF MERCURY CONTAMINATION
HOT ROLLED, ANNEALED & PICKLED (HRAP)✓

---------- MECHANICAL & OTHER TESTS ----------

HARDNESS RB	87✓
GRAIN SIZE	5
YIELD STRENGTH (PSI)	42400✓
TENSILE STRENGTH (PSI)	84000✓
BEND	OK
INTERGRANULAR CORROSION	OK
ELONGATION % IN 2"	58.0✓
REDUCTION OF AREA %	68.0

---------- CHEMICAL COMPOSITION ----------

CARBON	(C)	.015✓
MANGANESE	(MN)	1.50✓
PHOSPHORUS	(P)	.029✓
SULFUR	(S)	.001✓
SILICON	(SI)	.39✓
CHROMIUM	(CR)	18.51✓
NICKEL	(NI)	8.58✓
COBALT	(CO)	.11
COPPER	(CU)	.45
MOLY	(MO)	.40
NITROGEN	(N)	.06✓

KNOWINGLY & WILLFULLY FALSIFYING OR CONCEALING A MATERIAL FACT ON THIS FORM, OR MAKING FALSE, FICTITIOUS OR FRAUDULENT STATEMENTS OR REPRESENTATIONS HEREIN COULD CONSTITUTE A FELONY PUNISHABLE UNDER FEDERAL STATUTES.

J. BONGARDT, LAB MANAGER

P.O. BOX 1975
Baltimore, Maryland 21203
Telephone: (410) 522-6200

717-248-4911

STANDARD STEEL

A Division of FREEDOM FORGE Corporation

QP096 F1

FOR: PROCESS SYS INT MA

IT-6

CUSTOMER ORDER NUMBER 555492

REPORT DATE: 02/13/96

PCS SHIPPED: 30

04 OUR ORDER NO 432620501

~~SHIPLIST NO: 56833~~

PSI MIC NO. A766

PRODUCT

RING
MACHINE 250/500 MICRO TO SIZES SHOWN: 68.5" OD +.06 X 60.0" ID -.06 X 1.625" WD (*) V049M135-1
SPECIFICATION: ASME SA182 GRADE F304L IN ACCORDANCE WITH PROCESS SYSTEMS SPEC.
AV049-2-040 REV 6
(*) +.06

CUSTOMER

PROCESS SYSTEMS INTERNATIONAL, INC.
20 WALKUP DRIVE
WESTBOROUGH MA 01581
ATTENTION:

CHEMICAL ANALYSIS

HEAT NO.	C	SI	P	MN	S	NI	CR	MO	V	AL	TI				
S09279															
S09280	.031	.48	.033	1.78	.002	11.72	18.82					N .0530			
	.031✓	.45✓	.032✓	1.72✓	.001✓	11.48✓	18.55✓					N .0500			

MECHANICAL PROPERTIES

HEAT NUMBER	SERIAL NUMBER	BRINELL	TEN TEMP (F)	TEN BHN	TENSILE LOCATION	UTS (KSI)	YIELD ST (KSI) .20%OFST	% ELONG	%RED AREA	IMPACT DATA LOCATION	IMPACT DATA TEMP (F)	IMPACT DATA FT. LBS	IMPACT DATA % SHR	IMPACT DATA LAT EXP	GRN SZE
S09279	6G2844A		+75		PROLONG	74.5✓	37.0✓	61.0✓	81.0						
S09279	6G2844B														
S09279	6G2844C														
S09279	6G2844D														
S09279	6G2844E														
S09279	6G2845A														
S09279	6G2845B														
S09279	6G2845C														
S09279	6G2845D														
S09279	6G2845E														

PROCESS SYSTEMS INT'L., INC.
Reviewed this report and it complies
with SA 182 Gr 304L
96 Edition, _____ Addenda
By C. Warren Date 10-1-96

STANDARD STEEL

MATERIAL CERTIFICATION PAGE 2

FOR: PROCESS SYS INT MA PCS SHIPPED: 30

CUSTOMER ORDER NUMBER 555492 PAGE-2 04 OUR ORDER NO 432&20501

REPORT DATE: 09/13/96 SHIPLIST NO: 56855

MECHANICAL PROPERTIES

HEAT NUMBER	SERIAL NUMBER	BRINELL	TEN TEMP (F)	TEN BHN	TENSILE LOCATION	UTS (KSI)	YIELD ST (KSI) .20%OFST	% ELONG	%RED AREA	IMPACT DATA LOCATION	IMPACT DATA TEMP (F)	IMPACT DATA FT. LBS	IMPACT DATA % SHR	IMPACT DATA LAT EXP	GRN SIZE
S09279	6628466A														
S09279	6628468														
S09279	662846C														
S09279	662846D														
S09279	662846E														
S09280	662847A														
S09280	662847B		+75			74.5	36.5	64.0	79.0						
S09280	662847C														
S09280	662847D														
S09280	662847E														
S09280	662848A														
S09280	662848B														
S09280	662848C	A766	IT-6												
S09280	662848D														
S09280	662848E														
S09280	662849A														
S09280	662849B														
S09280	662849C														
S09280	662849D														
S09280	662849E														

PSI MIC NO. A766

PROCESS SYSTEMS INT'L., INC.
Reviewed this report and it complies with SA/SB 182 Gr. 304L
95 Edition, — Addenda
By C. Wojcicki Date 10-1-96

TYPE OF HEAT TREATMENT: SOLUTION TREATED AND QUENCHED

THIS REPORT CERTIFIES THAT THE ABOVE RESULTS ARE CORRECT AS REPORTED AND CONTAINED IN THE COMPANY RECORDS

D.W. Kobby
MGR. LABORATORIES

P.5/5 NO.174 M.LAB STANDARD STEEL SEP. 8.1997 11:41AM

Tel: 717-248-4011

STANDARD STEEL

A Division of FREEDOM FORGE Corporation

QP070-F1

FOR: PROCESS SYS INT MA

CUSTOMER ORDER NUMBER 555492

REPORT DATE: 09/13/96

IT-5

PCS SHIPPED: 30

04 OUR ORDER NO 432620501

SHIPLIST NO: 56855

PSI MIC NO. A750

PRODUCT

RING V049M135-1
MACHINE 250/500 MICRO TO SIZES SHOWN: 68.5" OD +.06 X 60.0" ID -.06 X 1.625" WD (*)
SPECIFICATION: ASME SA182 GRADE F304L IN ACCORDANCE WITH PROCESS SYSTEMS SPEC.
AV049-2-040 REV 6
(*) +.06

CUSTOMER

PROCESS SYSTEMS INTERNATIONAL, INC.

20 WALKUP DRIVE

WESTBOROUGH MA 01581
ATTENTION:

CHEMICAL ANALYSIS

HEAT NO.	C	SI	P	MN	S	NI	CR	MO	V	AL	TI				
(9) S09279	.031	.48	.033	1.78	.002	11.72	18.82					N .0530			
(7) S09280	.031	.45	.032	1.72	.001	11.48	18.55					N .0500			

MECHANICAL PROPERTIES

HEAT NUMBER	SERIAL NUMBER	BRINELL	TEN TEMP (F)	TEN BHN	TENSILE LOCATION	UTS (KSI)	YIELD ST (KSI) .20%OFST	% ELONG	%RED AREA	IMPACT DATA LOCATION	TEMP (F)	FT. LBS	% SHR	LAT EXP	GRN SZE
S09279	6G2844A		+75		PROLONG	74.5	37.0	61.0	81.0						
S09279	6G2844B														
S09279	6G2844C														
S09279	6G2844D														
S09279	6G2844E														
S09279	6G2845A														
S09279	6G2845B														
S09279	6G2845C														
S09279	6G2845D														
S09279	6G2845E														

A750 IT-5

PROCESS SYSTEMS INT'L., INC.
Reviewed this report and it complies with SA/SB- 182 Gr. 304L
90 Edition ____ Addend
By C. Wojcicki Date 10-1-96

STANDARD STEEL
A Division of FREEDOM FORGE Corporation

DETAILED MECHANICAL CERTIFICATION

FOR: PROCESS SYS INT MA
CUSTOMER ORDER NUMBER 555492 PAGE-2
REPORT DATE: 09/13/96

PAGE 2
PCS SHIPPED: 3
04 OUR ORDER NO 4326205
SHIPLIST NO: 56855

MECHANICAL PROPERTIES

HEAT NUMBER	SERIAL NUMBER	BRINELL	TEN TEMP (F)	TEN BHN	TENSILE LOCATION	UTS (KSI)	YIELD ST (KSI) .20%OFST	% ELONG	%RED AREA	IMPACT DATA LOCATION	TEMP (F)	FT. LBS	% SHR	LAT EXP	GRN SZE
S09279	6G2846A														
S09279	6G2846B														
S09279	6G2846C														
S09279	6G2846D														
S09279	6G2846E														
S09280	6G2847A														
S09280	6G2847B		+75			74.5	36.5	64.0	79.0						
S09280	6G2847C														
S09280	6G2847D														
S09280	6G2847E														
S09280	6G2848A														
S09280	6G2848B														
S09280	6G2848C														
S09280	6G2848D														
S09280	6G2848E														
S09280	6G2849A														
S09280	6G2849B														
S09280	6G2849C														
S09280	6G2849D														
S09280	6G2849E														

PSI MIC NO. A750

ROCESS SYSTEMS INT'L., INC.
Reviewed this report and it complies with SA/SB- 182 Gr. 304L
95 Edition, ____ Addenda
By C. Wotcicki Date 10-1-96

TYPE OF HEAT TREATMENT: SOLUTION TREATED AND QUENCHED

THIS REPORT CERTIFIES THAT THE ABOVE RESULTS ARE CORRECT AS REPORTED AND CONTAINED IN THE COMPANY RECORDS

D.W. Kolber
MGR. LABORATORIES

Tel: 717-240-4011

STANDARD STEEL

QP070-F1

A Division of FREEDOM FORGE Corporation

FOR: PROCESS SYS INT MA

CUSTOMER ORDER NUMBER 555492

REPORT DATE: 09/13/96

II-5

PCS SHIPPED: 30

04 OUR ORDER NO 432620501

SHIPLIST NO: 56855

PSI MIC NO. A754

PRODUCT

V049M135-1

RING
MACHINE 250/500 MICRO TO SIZES SHOWN: 68.5" OD +.06 X 60.0" ID -.06 X 1.625" WD (*)
SPECIFICATION: ASME SA182 GRADE F304L IN ACCORDANCE WITH PROCESS SYSTEMS SPEC.
AV049-2-040 REV 6
(*) +.06

CUSTOMER

PROCESS SYSTEMS INTERNATIONAL, INC.

20 WALKUP DRIVE

WESTBOROUGH MA 01581
ATTENTION:

CHEMICAL ANALYSIS

HEAT NO.	C	SI	P	MN	S	NI	CR	MO	V	AL	TI				
(9) S09279	.031	.48	.033	1.78	.002	11.72	18.82					N .0530			
(7) S09280	.031	.45	.032	1.72	.001	11.48	18.55					N .0500			

MECHANICAL PROPERTIES

HEAT NUMBER	SERIAL NUMBER	BRINELL	TEN TEMP (F)	TEN BHN	TENSILE LOCATION	UTS (KSI)	YIELD ST (KSI) .20%OFST	% ELONG	%RED AREA	IMPACT DATA LOCATION	TEMP (F)	FT. LBS	% SHR	LAT EXP	GRN SZE
S09279	6G2844A		+75		PROLONG	74.5	37.0	61.0	81.0						
S09279	6G2844B														
S09279	6G2844C														
S09279	6G2844D														
S09279	6G2844E														
S09279	6G2845A														
S09279	6G2845B														
S09279	6G2845C														
S09279	6G2845D														
S09279	6G2845E														

PROCESS SYSTEMS INT'L., INC.
Reviewed this report and it complies with SA/SB 182 Gr. 304L
96 Edition ____ Addenda

By C. Wojcicki Date 10-9-96

STANDARD STEEL
A Division of FREEDOM FORGE Corporation

MECHANICAL CERTIFICATION

FOR: PROCESS SYS INT MA
CUSTOMER ORDER NUMBER 555492 PAGE-2
REPORT DATE: 09/13/96

PAGE 2
PCS SHIPPED: 30
04 OUR ORDER NO 432620501
SHIPLIST NO: 56855

MECHANICAL PROPERTIES

HEAT NUMBER	SERIAL NUMBER	BRINELL	TEN TEMP (F)	TEN BHN	TENSILE LOCATION	UTS (KSI)	YIELD ST (KSI) .20%OFST	% ELONG	%RED AREA	IMPACT DATA LOCATION	TEMP (F)	FT. LBS	% SHR	LAT EXP	GRN SZE
S09279	6G2846A	↔ A754	IT-5												
S09279	6G2846B														
S09279	6G2846C														
S09279	6G2846D														
S09279	6G2846E														
S09280	6G2847A		+75			74.5	36.5	64.0	79.0						
S09280	6G2847B														
S09280	6G2847C														
S09280	6G2847D														
S09280	6G2847E														
S09280	6G2848A														
S09280	6G2848B														
S09280	6G2848C														
S09280	6G2848D														
S09280	6G2848E														
S09280	6G2849A														
S09280	6G2849B														
S09280	6G2849C														
S09280	6G2849D														
S09280	6G2849E														

PSI MIC NO. A754

PROCESS SYSTEMS INT'L., INC.
Reviewed this report and it complies with SA/SB- ____ Gr. 304L
95 Edition, ____ Addenda
By C. Wotaicki Date 10-1-92

TYPE OF HEAT TREATMENT: SOLUTION TREATED AND QUENCHED

THIS REPORT CERTIFIES THAT THE ABOVE RESULTS ARE CORRECT AS REPORTED AND CONTAINED IN THE COMPANY RECORDS

D.W. Kolber
MGR. LABORATORIES

tel: 717-248-4011

STANDARD STEEL

QP070-F1

A Division of FREEDOM FORGE Corporation

FOR: PROCESS SYS INT MA

IT-5

CUSTOMER ORDER NUMBER 555492

REPORT DATE: 09/13/96

PCS SHIPPED: 30

04 OUR ORDER NO 432620501

SHIPLIST NO: 56855

PSI MIC NO. A760

PRODUCT

RING V049M135-1
MACHINE 250/500 MICRO TO SIZES SHOWN: 60.5" OD +.06 X 60.0" ID -.06 X 1.625" WD (*)
SPECIFICATION: ASME SA182 GRADE F304L IN ACCORDANCE WITH PROCESS SYSTEMS SPEC.
AV049-2-040 REV 6
(*) +.06

CUSTOMER

PROCESS SYSTEMS INTERNATIONAL, INC.
20 WALKUP DRIVE
WESTBOROUGH MA 01581
ATTENTION:

CHEMICAL ANALYSIS

HEAT NO.	C	SI	P	MN	S	NI	CR	MO	V	AL	TI				
S09279															
809280	.031	.48	.033	1.78	.002	11.72	18.82					N .0530			
	.031✓	.45✓	.032✓	1.72✓	.001✓	11.48✓	18.55✓					N .0500			

MECHANICAL PROPERTIES

HEAT NUMBER	SERIAL NUMBER	BRINELL	TEN TEMP (F)	TEN BHN	TENSILE LOCATION	UTS (KSI)	YIELD ST (KSI) .20%OFST	% ELONG	%RED AREA	IMPACT LOCATION	IMPACT TEMP (F)	IMPACT FT. LBS	IMPACT % SHR	IMPACT LAT EXP	GRN SZE
S09279	6G2844A		+75		PROLONG	74.5	37.0	61.0	81.0						
S09279	6G2844B					✓	✓	✓							
S09279	6G2844C														
S09279	6G2844D														
S09279	6G2844E														
S09279	6G2845A														
S09279	6G2845B														
S09279	6G2845C														
S09279	6G2845D														
S09279	6G2845E														

PROCESS SYSTEMS INT'L., INC.
Reviewed this report and it complies
with SA/SB 182 Gr. 304L
'96 Edition, — Addenda
By C. Watorek Date 10-1-96

STANDARD STEEL
A Division of FREEDOM FORGE Corporation

MECHANICAL CERTIFICATION

FOR: PROCESS SYS INT MA
CUSTOMER ORDER NUMBER 555492 PAGE-2
REPORT DATE: 09/13/96

PAGE 2
PCS SHIPPED: 30
04 OUR ORDER NO 432620501
SHIPLIST NO: 56855

MECHANICAL PROPERTIES

HEAT NUMBER	SERIAL NUMBER	BRINELL	TEN TEMP (F)	TEN BHN	TENSILE LOCATION	UTS (KSI)	YIELD ST (KSI) .20%OFST	% ELONG	%RED AREA	IMPACT DATA LOCATION	TEMP (F)	FT. LBS	% SHR	LAT EXP	GRN SZE
S09279	6G2846A														
S09279	6G2846B														
S09279	6G2846C														
S09279	6G2846D														
S09279	6G2846E														
S09280	6G2847A	IT-5													
S09280	6G2847B	A760	+75			74.5	36.5	64.0	79.0						
S09280	6G2847C														
S09280	6G2847D														
S09280	6G2847E														
S09280	6G2848A														
S09280	6G2848B														
S09280	6G2848C														
S09280	6G2848D														
S09280	6G2848E														
S09280	6G2849A														
S09280	6G2849B														
S09280	6G2849C														
S09280	6G2849D														
S09280	6G2849E														

PSI MIC NO. A760

PROCESS SYSTEMS INT'L., INC.
Reviewed this report and it complies with SA/SB- 182 Gr. 304L
96 Edition, ——— Addenda
By C. Wojacki Date 10-1-96

TYPE OF HEAT TREATMENT: SOLUTION TREATED AND QUENCHED

THIS REPORT CERTIFIES THAT THE ABOVE RESULTS ARE CORRECT AS REPORTED AND CONTAINED IN THE COMPANY RECORDS

D.W. Kolby
MGR. LABORATORIES

Weld Wire

C & C's

SANDVIK Steel

We make Quality happen . . .

MATERIAL CERTIFICATE

SANDVIK STEEL COMPANY
P.O. BOX 1220, SCRANTON, PA. 18501 PH. (717) 587-5191
PLANT LOCATION: INTERSTATE 81, WAVERLY EXIT 59

T0065-R/7741/0500

SOLD TO: BOC GASES (AIRCO)
LISLE IL

SHIP TO: PROCESS SYSTEMS

CUSTOMER PURCHASE ORDER NO.:

CERTIFICATE DATE: 10/04/96

SANDVIK ORDER NO.: 92899

QUANTITY: 180 LBS

WORK ORDER / LOT NO.:

TAG:

AWS A-5.9

STAINLESS STEEL WELDING WIRE TYPE ER 308L DIAMETER: 1/8"

Filler Metal Analysis, %

Heat S713906	C	Si	Mn	P	S	Cr	Ni
	.013	.430	1.720	.020	.013	19.88	9.98
	Mo	**Cb/Nb**	**Ta**	**Ti**	**Cu**	**Cb/Nb+Ta**	**N**
	.250	.010		.005	.150		.055

PSI QC CW

The material has not come in contact with mercury or mercury-containing compounds.

"Material not touched by hand after final production process cleaning."

Material has been manufactured in accordance with Sandvik Steel Company Quality Manual Revision 10 dated October 1, 1995. Quality system approved to ISO-9002/ANSI/ASQC Q9002-1994.

Bengt E. Berg, Director, Quality and Metallurgy
Daniel Damiani, Quality Engineer

(661197(10)

5

NDVIK Steel

Make Quality happen

MATERIAL CERTIFICATE

SANDVIK STEEL COMPANY

P.O. BOX 1220, SCRANTON, PA. 18501 PH. (717) 587-5191

PLANT LOCATION: INTERSTATE 81, WAVERLY EXIT 59

70065-R/7741015OO

D TO: BOC GASES (AIRCO)
LISLE IL

SHIP TO: PROCESS SYSTEMS

TOMER PURCHASE ORDER NO.:

CERTIFICATE DATE: [illegible]

DVIK ORDER NO.: 16249

QUANTITY: 180LB

IK ORDER / LOT NO.:

TAG:

AWS A-5.9

STAINLESS STEEL WELDING WIRE TYPE ER 308L

DIAMETER: 3/32"

Filler Metal Analysis, %

Heat 544092S	C	Si	Mn	P	S	Cr	Ni
	.021	.470	1.800	.014	.013	20.00	9.68
	Mo	Cb/Nb	Ta	Ti	Cu	Cb/Nb+Ta	N
	.020			.002	.040	.030	.053

PSI QC CW

The material has not come in contact with mercury or mercury-containing compounds.

"Material not touched by hand after final production process cleaning."

Material has been manufactured in accordance with Sandvik Steel Company Quality Manual Revision 10 dated October 1, 1995. Quality system approved to ISO-9002/ANSI/ASQC Q9002-1994.

BOC GASES
90 RESEARCH ROAD
HINGHAM, MA 02043

Keith M. Hottle, Manager, Quality & Metallurgy
Celeste Brennan, Sr. Quality Engineer

Celeste Brennan/cp

5(66119)(10)

(2)

CUSTOMER ORIGINAL

SANDVIK

MATERIAL CERTIFICATE

SANDVIK STEEL COMPANY
P.O BOX [illegible] SCRANTON, PA. 18501 P (717) 587-5191
PLANT LOCATION: INTERSTATE 81, WAVERLY EXIT 59

SOLD TO: BOC GASES (AIRCO)
LISLE IL

SHIP TO: AIRCO-NEW ENGLAND
HINGHAM MA

CUSTOMER PURCHASE ORDER NO.: 47910

CERTIFICATE DATE: 7/14/97

SANDVIK ORDER NO.: 16249

QUANTITY: PER PACKING NOTE

WORK ORDER / LOT NO.: 980309

AWS A [illegible] 9

STAINLESS STEEL WELDING WIRE TYPE ER 308L

DIAMETER: 1/16"

Filler Metal Analysis, %

Heat	C	Si	Mn	P	S	Cr	Ni
S713039	.013	.380	1.800	.015	.013	20.06	9.84

PSI QC CW

Mo	Cb/Nb	Ta	Ti	Cu	Cb/Nb+Ta	N
.100			.002	.070	.030	.044

The material has not come in contact with mercury or mercury-containing compounds.

"Material not touched by hand after final production process cleaning."

Material has been manufactured in accordance with Sandvik Steel Company Quality Manual Revision 10 dated October 1, 1995. Quality system approved to ISO-9002/ANSI/ASQC Q9002-1994.

PROCESS SYS
120 LBS
70040-R / 77410500

Keith M. Hottle, Manager, Quality & Metallurgy
Celeste Brennan, Sr. Quality Engineer

Celeste Brennan

15(66119)(10)

CUSTOMER ORIGINAL

BOC GASES
90 RESEARCH ROAD
HINGHAM, MA 02043

56 lbs

XJK8115-02 KOBELCO

PURCHASER
PO 70040-R/7741015OO
PROCESS SYSTEMS

INSPECTION CERTIFICATE

FLUX CORED WIRE

CERTIFICATE NO.: A 017

DATE OF ISSUE : 1997.01.28

TRADE DESIGNATION	DIMENSION (mm)	MFG. NO.	APPLICABLE SPECIFICATION AND CLASSIFICATION
DW-308L	0.9	B6M1085	AWS A5.22 E308LT0-1 ASME SFA-5.22 E308LT-1

CHEMICAL COMPOSITION (%)

ELEMENTS	C	SI	MN	P	S	CU	NI	CR	MO	NB	N	FN	FS	FNV
DEPOSITED METAL	0.034	0.39	1.22	0.026	0.008	0.05	9.73	18.91	0.11	0.01	0.041	UNIT:FN 6.0	6.8	UNIT:FN 6.0
ELEMENTS														

TENSILE TEST OF DEPOSITED METAL

YIELD POINT	YIELD STRENGTH AT 0.2% OFFSET	TENSILE STRENGTH	ELONGATION
– N /mm²	– N /mm²	584 N /mm²	
– kgf/mm²	– kgf/mm²	59.6 kgf/mm²	52 %

IMPACT TEST OF DEPOSITED METAL

TEST TEMP.	ABSORBED ENERGY AVG.
– ℃	– J
	– kgf.m

HARDNESS TEST

VICKERS HARDNESS (AVG.)
–

WELDING CONDITIONS

TYPE OF CURRENT	DCEP	SHIELDING GAS	CO2	POSTWELD HEAT TREATMENT
AMPERAGE	110 A			
ARC VOLTAGE	25 V			– ℃ x – h

FS = FERRITE (SCHAEFFLER DIAGR.
FN = FERRITE (DELONG DIAGRAM)
FNV= FERRITE (WRC)

WE HEREBY CERTIFY THAT THE TEST RESULTS OF THE ABOVE WELDING MATERIAL ARE AS DESCRIBED HEREIN AND SATISFY THE REQUIREMENTS OF THE APPLICABLE SPECIFICATION.

KOBE STEEL, LTD.
WELDING DIV. FUJISAWA PLANT

CHIEF INSPECTOR

04/09/1997 15:57 7139746424 KOBELCO PAGE 14

BOC GASES

KOBELCO

90 RESEARCH ROAD
HINGHAM, MA 02043
PO# 70040-R / 774101500
PROCESS SYSTEMS

INSPECTION CERTIFICATE

FLUX CORED WIRE

CERTIFICATE NO.: A 002

DATE OF ISSUE : 1997.01.07

TRADE DESIGNATION	DIMENSION (mm)	MFG. NO.	PSI QC CW	APPLICABLE SPECIFICATION AND CLASSIFICATION
DW-309L	0.9	B6M1015		AWS A5.22 E309LT0-1 ASME SFA-5.22 E309LT-1

CHEMICAL COMPOSITION (%)

ELEMENTS	C	SI	MN	P	S	CU	NI	CR	MO	NB	N	FN UNIT:FN	FS	FNW UNIT:FN
DEPOSITED METAL	0.026	0.43	1.10	0.022	0.012	0.04	12.75	22.56	0.04	0.02	0.017	15.0	8.7	12.0
ELEMENTS														

TENSILE TEST OF DEPOSITED METAL

YIELD POINT	YIELD STRENGTH AT 0.2% OFFSET	TENSILE STRENGTH	ELONGATION
− N/mm²	− N/mm²	540 N/mm²	
− kgf/mm²	− kgf/mm²	55.1 kgf/mm²	40 %

IMPACT TEST OF DEPOSITED METAL

TEST TEMP.	ABSORBED ENERGY AVG.	
− ℃	− J	
	− kgf.m	

HARDNESS TEST

VICKERS HARDNESS (AVG.)
−

WELDING CONDITIONS

TYPE OF CURRENT	DCEP		SHIELDING GAS	CO2
AMPERAGE	110	A		
ARC VOLTAGE	25	V		

POSTWELD HEAT TREATMENT

− ℃x − h

FS = FERRITE (SCHAEFFLER DIAGRAM)
FN = FERRITE (DELONG DIAGRAM)
FNW = FERRITE (WRC)

WE HEREBY CERTIFY THAT THE TEST RESULTS OF THE ABOVE WELDING MATERIAL ARE AS DESCRIBED HEREIN AND SATISFY THE REQUIREMENTS OF THE APPLICABLE SPECIFICATION.

KOBE STEEL, LTD.
WELDING DIV. FUJISAWA PLANT

CHIEF INSPECTOR

SANDVIK Steel

We make Quality happen

MATERIAL CERTIFICAT

SANDVIK STEEL COMPANY
P.O. BOX 1220, SCRANTON, PA. 18501 PH. (717) 587-5191
PLANT LOCATION: INTERSTATE 81, WAVERLY EXIT 59

OLD TO: BOC GASES (AIRCO)
LISLE IL

SHIP TO:

CUSTOMER PURCHASE ORDER NO.:

CERTIFICATE DATE: 4/21/97

SANDVIK ORDER NO.: 12603

QUANTITY: PER PACKING NOTE

WORK ORDER / LOT NO.:

TAG:

AWS A-5.9

STAINLESS STEEL WELDING WIRE TYPE ER 308L

DIAMETER: 3/32"

Filler Metal Analysis, %

Heat S7/2976	C	Si	Mn	P	S	Cr	Ni
	.013	.440	1.800	.015	.015	19.96	9.63

PSF QC CW

Mo	Cb/Nb	Ta	Ti	Cu	Cb/Nb+Ta	N
.070			.002	.060	.030	.035

The material has not come in contact with mercury or mercury-containing compounds.

"Material not touched by hand after final production process cleaning."

Material has been manufactured in accordance with Sandvik Steel Company Quality Manual Revision 10 dated October 1, 1995. Quality system approved to ISO-9002/ANSI/ASQC Q9002-1994.

Keith M. Hottle, Manager, Quality & Metallurgy
Celeste Brennan, Sr. Quality Engineer

Celeste Brennan/cp

15(66119)(10)

BOC GASES
90 RESEARCH ROAD
HINGHAM, MA 02043

PROCESS SYSTEMS
120 LGS 308L 3/32
7040-R/774101500

(6)

(12)

CUSTOMER ORIGINAL

SANDVIK Steel

We make Quality happen...

MATERIAL CERTIFICA

SANDVIK STEEL COMPANY
P.O. BOX 1220, SCRANTON, PA. 18501 PH. (717) 587-5191
PLANT LOCATION: INTERSTATE 81, WAVERLY EXIT 59

SOLD TO: BOC GASES (AIRCO)
LISLE IL

SHIP TO: AIRCO-NEW ENGLAND
HINGHAM MA

CUSTOMER PURCHASE ORDER NO.:

CERTIFICATE DATE: 10/04/96

SANDVIK ORDER NO.: 92899

QUANTITY: PER PACKING NOTE

WORK ORDER / LOT NO.:

TAG:

AWS A-5.9

STAINLESS STEEL WELDING WIRE TYPE ER 308L DIAMETER: 1/8"

Filler Metal Analysis, %

Heat S 711088

PSI QC CW

C	Si	Mn	P	S	Cr	Ni
.013	.430	1.720	.020	.013	19.88	9.98

Mo	Cb/Nb	Ta	Ti	Cu	Cb/Nb+Ta	N
.250	.010		.005	.150		.055

The material has not come in contact with mercury or mercury-containing compounds.

"Material not touched by hand after final production process cleaning."

Material has been manufactured in accordance with Sandvik Steel Company Quality Manual Revision 10 dated October 1, 1995. Quality system approved to ISO-9002/ANSI/ASQC Q9002-1994.

PROCESS SYSTEMS
120 LBS 308L 1/8
70040-R / 774101500

Bengt H. Berg, Director, Quality and Metallurgy
Daniel Damiani, Quality Engineer

15(66119)(10)

5

CUSTOMER ORIGINAL

7

MATERIAL CERTIFICATE

SANDVIK Steel
make Quality happen

SANDVIK STEEL COMPANY
P.O. BOX 1220, SCRANTON, PA. 18501 PH. (717) 587-5191
PLANT LOCATION: INTERSTATE 81, WAVERLY EXIT 59

SOLD TO: BOC GASES (AIRCO)
LISLE IL

SHIP TO: PROCESS SYSTEMS INTL
7-8-97

CUSTOMER PURCHASE ORDER NO.: 70038-R/774/01500

CERTIFICATE DATE: 4/21/97

SANDVIK ORDER NO.: 12603

QUANTITY: PER PACKING NOTE

WORK ORDER / LOT NO.:

TAG:

AWS A-5.9

.035

STAINLESS STEEL WELDING WIRE TYPE ER 308L

DIAMETER: 3/32 120 LB

Filler Metal Analysis, %

Heat	C	Si	Mn	P	S	Cr	Ni
3713617	.013	.440	1.800	.015	.015	19.96	9.63

PSI QC CW

Mo	Cb/Nb	Ta	Ti	Cu	Cb/Nb+Ta	N
.070			.002	.060	.030	.035

The material has not come in contact with mercury or mercury-containing compounds.

"Material not touched by hand after final production process cleaning."

Material has been manufactured in accordance with Sandvik Steel Company Quality Manual Revision 10 dated October 1, 1995. Quality system approved to ISO-9002/ANSI/ASQC Q9002-1994.

BOC GASES
90 RESEARCH ROAD
HINGHAM, MA 02043

Keith M. Hottle, Manager, Quality & Metallurgy
Celeste Brennan, Sr. Quality Engineer

Celeste Brennan/cp

15(66119)(10)

(8)

HARRIS-WELCO | 1051 YORK ROAD P.O. BOX 69 | KINGS MOUNTAIN, NC 28086

SOLDERING, BRAZING & WELDING PRODUCTS

CERTIFICATE OF COMPLIANCE

JGP ISSUE DATE: 08-30-96

Process Systems Intl
P.O. 70038R/7741000

DATE SENT 6-27-97

HEAT NUMBER/LOT NUMBER: 6120287803 — 60LB
E50836-K1 — 20LB

CHEMICAL COMPOSITION LIMITS

ALLOY: 308L
SPEC : AWS A5.9-93 ER308L

CARBON			.030	SILICON	.300	-	.650
MANGANESE	1.000	-	2.500	PHOSPHORUS			.030
SULFUR			.030	CHROMIUM	19.500	-	22.000
NICKEL	9.000	-	11.000	MOLYBDENUM			.750
TANTALUM			.500	CB + TA			.500
TITANIUM			.600	COPPER			.750
NITROGEN			.600	COBALT			.500
MAGNESIUM			.500	OTHER		.5	
NIOBIUM			.500				

PSI QC CW 7-7-97

PSI QC CW 7-7-97

SINGLE VALUES ARE MAXIMUM UNLESS OTHERWISE SPECIFIED.

SAFETY SILV, STAY SILV, STAY CLEAN, STAY BRITE & BRIDGIT ARE REGISTERED TRADEMARKS OF J.W. HARRIS CO., INC

WE CERTIFY THAT THE ITEMS AND/OR MATERIALS LISTED ABOVE ARE IN ACCORDANCE WITH ALL APPLICABLE PURCHASE SPECIFICATIONS HAVING PASSED OUR INSPECTIONS AS NOTED.

Janice Pittman
CERTIFICATION CLERK

BOC GASES
90 RESEARCH ROAD
HINGHAM, MA 02043

(9)

THE ESAB GROUP, INC.
1500 Karen Lane, Hanover, PA 17331

CERTIFICATE OF TYPICAL ANALYSIS

11/19/96 PROCESS SYSTEMS INTL

BOC GASES
90 RESEARCH ROAD
HINGHAM, MA 02043

7-14-97 Order No.: 700384/7741000

This Material Conforms to Specification:
AWS A5.20-95, ASME SFA 5.20

Trade Name
or Trademark: Dual Shield II 70 Ultra

Diameter Size: .035" x 33# Spool

Type: E71T-1* / E71T-12M

Weight: 132 LB

X-Rays Satisfactory

Lot Number: 49455 — 66 LB ✓
49720 — 33 LB ✓
50293 — 33 LB ✓

PSI
QC
CW

Typical Chemical Properties		(Specification Requirements)
Carbon:	.02	(.15 Max.)
Manganese:	1.10	(1.60 Max.)
Chromium:	.04	(.20 Max.)
Nickel:	.01	(.50 Max.)
Silicon:	.34	(.90 Max.)
Columbium+:		
Tantalum:		
Molybdenum:	.01	(.30 Max.)
Tungsten:		
Copper:	.01	(.35 Max.)
Titanium:		
Phosphorus:	.013	(.03 Max.)
Sulphur:	.010	(.03 Max.)
Vanadium:	.02	(.08 Max.)

Hydrogen: 4.2 ml/100 gr. of weld metal

Fillets: Vertical-Up/Overhead

Shielding Gas: 75% AR/ 25% CO_2

Typical Mechanical Properties

	As Welded	MPa
Yield Strength (Psi)	70,000	483
Tensile Strength (Psi)	76,800	530
Elongation (2"), %	32.0	
Red. of Area, %	74.6	
Charpy V-Notch Impacts		
@ -20°F. (ft.-lbs.)	117	
@ -29°C. (Joules)	159	

(Specification Requirements)

Minimum Unless Otherwise Stated	As Welded	MPa
Yield Strength (Psi)	58,000	400
Tensile Strength (Psi)	70-90,000	480-620
Elongation (2"), %	22.0	22
Red. of Area, %	----	--
Charpy V-Notch Impacts		
@ -20°F. (ft.-lbs.)	20	
@ -29°C. (Joules)	27	

* No data being issued for E71T-1 classification using the CO_2 shielding gas.

The undersigned certifies that the product supplied will meet the requirements of the applicable AWS Filler Metal Specification when tested in accordance with that specification, and that no significant change has been made in the elements described in the qualification approval.

By: D. A. Smith

D. A. Smith, Supervisor, Q. A. Services

BOC GASES
90 RESEARCH ROAD
HINGHAM, MA 02043

SANDVIK
Steel

MATERIAL CERTIFICATE

SANDVIK STEEL COMPANY
P.O. BOX 1220, SCRANTON, PA. 18501 PH. (717) 587-5191
PLANT LOCATION: INTERSTATE 81, WAVERLY EXIT 59

SOLD TO: PROCESS SYS SHIP TO:

CUSTOMER PURCHASE ORDER NO. 70029R/774101500 CERTIFICATE DATE: 4/25/97

SANDVIK ORDER NO. QUANTITY: 120 LBS

WORK ORDER / LOT NO.: 978457 TAG:

AWS A-5.9

STAINLESS STEEL WELDING WIRE TYPE ER 308L DIAMETER: 3/32"

Filler Metal Analysis, %

Heat	C	Si	Mn	P	S	Cr	Ni
S712976	.013	.440	1.800	.015	.015	19.96	9.63

	Mo	Cb/Nb	Ta	Ti	Cu	Cb/Nb+Ta	N
	.070			.002	.060	.030	.035

The material has not come in contact with mercury or mercury-containing compounds.

"Material not touched by hand after final production process cleaning."

Material has been manufactured in accordance with Sandvik Steel Company Quality Manual Revision 10 dated October 1, 1995. Quality system approved to ISO-9002/ANSI/ASQC Q9002-1994.

BOC GASES
90 RESEARCH ROAD
HINGHAM, MA 02043

Keith M. Hottle, Manager, Quality & Metallurgy
Celeste Brennan, Sr. Quality Engineer

Celeste Brennan lcp

IS(66119)(10)

(11)

CUSTOMER ORIGINAL

SANDVIK Steel

We Make Quality Happen

MATERIAL CERTIFICA

SANDVIK STEEL COMPANY
P.O. BOX 1220, SCRANTON, PA. 18501 PH. (717) 587-5191
PLANT LOCATION: INTERSTATE 81, WAVERLY EXIT 59

SOLD TO: PROCESS SYSTEMS

SHIP TO: [redacted]
AIRCO-NEW ENGLAND
HINGHAM MA

CUSTOMER PURCHASE ORDER NO.: 70029R/774101500

CERTIFICATE DATE: 3/20/97

SANDVIK ORDER NO.:

QUANTITY:

WORK ORDER / LOT NO.: 976164

TAG:

AWS A-5.9

STAINLESS STEEL WELDING WIRE TYPE ER 308L

DIAMETER: 1/16"

Filler Metal Analysis, %

Heat	C	Si	Mn	P	S	Cr	Ni
S711375	.007	.400	1.800	.014	.012	20.02	9.85

	Mo	Cb/Nb	Ta	Ti	Cu	Cb/Nb+Ta	N
	.010			.002	.030	.030	.055

The material has not come in contact with mercury or mercury-containing compounds.

"Material not touched by hand after final production process cleaning."

Material has been manufactured in accordance with Sandvik Steel Company Quality Manual Revision 10 dated October 1, 1995. Quality system approved to ISO-9002/ANSI/ASQC Q9002-1994.

Keith M. Bottle, Manager, Quality & Metallurgy
Celeste Brennan, Sr. Quality Engineer

IS(66119)(10)

BOC GASES
90 RESEARCH ROAD
HINGHAM, MA 02043

(12)

90 RESEARCH ROAD
HINGHAM, MA 02043

PO 70031R/774101500

X/11

KOBE

PURCHASER
Process Systems Intl

INSPECTION CERTIFICATE
FLUX CORED WIRE

CERTIFICATE No.: 0 021
DATE OF ISSUE : 1997.04.24

TRADE DESIGNATION	DIMENSION (mm)	MFG. NO	APPLICABLE SPECIFICATION AND CLASSIFICATI
DW-309L	1.2	B6F2110382 (PSI QC CW)	AWS A5.22-95 E309LT0-1 ASME SFA-5.22 E309LT- (1995 Edition)

CHEMICAL COMPOSITION (%)

ELEMENTS	C	SI	MN	P	S	CU	NI	CR	MO	NB	N	FN	FS	FNW
DEPOSITED METAL	0.024	0.44	1.25	0.018	0.013	0.02	12.78	23.76	0.02	<0.01	0.011	UNIT:FN 19.7	9.7	UNIT:FN 11.6

TENSILE TEST OF DEPOSITED METAL				IMPACT TEST OF DEPOSITED METAL			HARDNESS TEST
YIELD POINT	YIELD STRENGTH AT 0.2% OFFSET	TENSILE STRENGTH	ELONGATION	TEST TEMP.	ABSORBED ENERGY AVG.	ABSORBED ENERGY —	—
— N/mm² / — MPa	— N/mm² / — MPa	555 N/mm² / 555 MPa	37 %	— ℃	— J / — kgf·m	—	—

WELDING CONDITIONS				POSTWELD HEAT TREATMENT	
TYPE OF CURRENT	DCEP	SHIELDING GAS	CO2		FS = FERRITE(SCHAEFFLER DIAGRAM) FN = FERRITE(DELONG DIAGRAM) WRC = FERRITE(WRC)
AMPERAGE	200 A			— ℃ × — h	
ARC VOLTAGE	29 V				

WE HEREBY CERTIFY THAT THE TEST RESULTS OF THE ABOVE WELDING MATERIAL ARE AS DESCRIBED HEREIN AND SATISFY THE REQUIREMENTS OF THE APPLICABLE SPECIFICATION.

KOBE STEEL, LTD
WELDING DIV. FUJISAWA PLANT

CHIEF INSPECTOR

REMARKS: CAPITAL LETTERS ARE USED EXCEPT FOR UNIT.

SANDVIK Steel

We make Quality happen . . .

MATERIAL CERTIFICAT

SANDVIK STEEL COMPANY

P.O. BOX 1220, SCRANTON, PA. 18501 PH. (717) 587-5191

PLANT LOCATION: INTERSTATE 81, WAVERLY EXIT 59

OLD TO: BOC GASES (AIRCO)
LISLE IL

SHIP TO: AIRCO-NEW ENGLAND
HINGHAM MA

USTOMER PURCHASE ORDER NO.: 48184

CERTIFICATE DATE: 6/10/97

ANDVIK ORDER NO.: 17126

QUANTITY: PER PACKING NOTE

/ORK ORDER / LOT NO.: 979336

TAG: 848523-01

AWS A-5.9

STAINLESS STEEL WELDING WIRE TYPE ER 308LSI DIAMETER: .035"

Filler Metal Analysis, %

Heat	C	Si	Mn	P	S	Cr	Ni
S712152 -60LB	.014	.840	1.700	.016	.013	19.50	10.23

PSI QC CW

Mo	Cb/Nb	Ta	Ti	Cu	Cb/Nb+Ta	N
.030			.002	.040	.020	.042

Process Systems Intl
PO 70031R/77410/500

The material has not come in contact with mercury or mercury-containing compounds.

BOC GASES
90 RESEARCH ROAD
HINGHAM, MA 02043

Keith M. Hottle, Manager, Quality & Metallurgy

15(03030, REV.2)(10)

90 RESEARCH ROAD
HINGHAM, MA 02043

PO. 700318/7741015500 6-13-97 X/11 KOBEL

PURCHASER
Process Systems Int'l

INSPECTION CERTIFICATE
FLUX CORED WIRE

CERTIFICATE No : D 021
DATE OF ISSUE : 1997.04.24

TRADE DESIGNATION	DIMENSION (mm)	MFG. NO	APPLICABLE SPECIFICATION AND CLASSIFICATIO
DW-309L	.035 84LB	BLM1015 (PST QC CW)	AWS A5.22-95 E309LTO-1 ASME SFA-5.22 E309LT- (1995 Edition)

CHEMICAL COMPOSITION (%)

ELEMENTS	C	SI	MN	P	S	CU	NI	CR	MO	NB	N	FN	FS	FNW	
DEPOSITED METAL	0.024	0.44	1.25	0.018	0.013	0.02	12.78	23.76	0.02	<0.01	0.011	UNIT:FN 19.7	9.7	UNIT:FN 11.6	

TENSILE TEST OF DEPOSITED METAL

YIELD POINT	YIELD STRENGTH AT 0.2% OFFSET	TENSILE STRENGTH	ELONGATION
N/mm²	— N/mm²	555 N/mm²	37 %
MPa	— MPa	555 MPa	

IMPACT TEST OF DEPOSITED METAL

TEST TEMP.	ABSORBED ENERGY		
	AVG.	—	
— ℃	— J	—	—
	— kgf·m		

HARDNESS TEST: —

WELDING CONDITIONS

TYPE OF CURRENT	DCEP	SHIELDING GAS	CO2
AVERAGE	200 A		
VOLTAGE	29 V		

POSTWELD HEAT TREATMENT: — ℃ × — h

FS = FERRITE(SCHAEFFLER DIAGRAM)
FN = FERRITE(DELONG DIAGRAM)
WRC = FERRITE(WRC)

WE HEREBY CERTIFY THAT THE TEST RESULTS OF THE ABOVE WELDING MATERIAL ARE AS DESCRIBED HEREIN AND SATISFY THE REQUIREMENTS OF THE APPLICABLE SPECIFICATION.

◆KOBE STEEL, LTD
WELDING DIV. FUJISAWA PLANT

CHIEF INSPECTOR

REMARKS: CAPITAL LETTERS ARE USED EXCEPT FOR UNIT.

DELIVERY COPY

Airgas™

NORTHEAST AIRGAS

SERVING NEW ENGLAND

PICKING TICKET

Sold By: AIRGAS NORTHEAST
199 SOUTHWEST CUT OFF
WORCESTER, MA 01604
800-821-9852

Cust # : 72600

Order # : 306626-00

Ship To: PROCESS SYSTEMS INTERNT'L

Order Date: 04/22/97

20 WALKUP DR
WESTBURY MA 01581-0000

Page : 001 OF 001

NAME : PROCESS SYSTEMS
PO # : 70024R JOB#774-1915
REL# :
PHONE#: 508-898-0285

TER: 142
SLS: 8
BRN: 10

SHIP VIA: CUST PICKUP -NONE-
SHIP COD: 03 UPS: 0
COL/PPD : PREPAID
ROUTE # :

INITIALS: KEN
ORD TYPE: CHRG-OF
TIME : 28-APR-97 12:00
LPT :

QTY SHIP	UNIT HM	DESCRIPTION & HAZARD CLASS	LINE NO	ITEM NUMBER	LOC	QTY ORDER	QTY BKORD	BIN LOC	WT	UNIT AMOUNT	EXTEN AMOU
		********** SHIP COMPLETE ONLY **********									
120	LB	5183 3/32X36 ALUMINUM	1	ALC 518333236 MSDS: 000078	LAK	120	0		120.0		
120	LB	5183 1/8X36 ALUM.	2	ALC 51831836	LAK	120	0		120.0		

********** This order is complete **********

Total Weight: 240.0

PSI
QC
CW

This is to certify that the above named materials are properly classified, described, packaged, marked and labeled, and are in proper condition for transportation according to the applicable regulations of the Department of Transportation.

Authorized Signature _____

Received by [signature]

AlcoTec

A Partnership of Alcoa Weld Wire Company, Inc.
and Aluminum Technology Corporation

AlcoTec Wire Company
2750 Aero Park Drive
Traverse City, MI 49686 USA
(616) 941-4111 Phone
(616) 941-8154 Fax
alcotec@traverse.com E-mail

11/08/96

CERTIFIED MATERIAL REPORT

Alloy	Diameter	Package	Lot Number
R5183	.125	TIG Rod Box	363072

P.O.# - 86207

PSI QC CW

Chemical Composition limits

Element	Minimum %	Maximum %
Si	---	0.40
Fe	---	0.40
Cu	---	0.10
Mn	0.50	1.0
Mg	4.3	5.2
Cr	0.05	0.25
Zn	---	0.25
Ti	---	0.15
Be	---	0.0008
Other Each	---	0.05
Other Total	---	0.15
Aluminum	Remainder	

AlcoTec Wire Company hereby certifies that the material covered by this report has been inspected in accordance with and been found to meet the applicable requirements of specification AWS A5.10-92 and any order requirements listed below.

All Packaging materials are in compliance with CONEG legislation.

Additional Order Requirements:

AlcoTec

A Partnership of Alcoa Weld Wire Company, Inc.
and Aluminum Technology Corporation

AlcoTec Wire Company
2750 Aero Park Drive
Traverse City, MI 49686 USA
(616) 941-4111 Phone
(616) 941-9154 Fax
alcotec@traverse.com E-mail

3/32

04/23/97

CERTIFIED MATERIAL REPORT

Alloy	Diameter	Package	Lot Number
R5183	.094	TIG Rod Box	363348

P.O.# - 105019

PSI QC CW

Tony Tack
1 box of 101
to TII sample
abs
4/29/97

Chemical Composition limits

Element	Minimum %	Maximum %
Si	---	0.40
Fe	---	0.40
Cu	---	0.10
Mn	0.50	1.0
Mg	4.3	5.2
Cr	0.05	0.25
Zn	---	0.25
Ti	---	0.15
Be	---	0.0008
Other Each	---	0.05
Other Total	---	0.15
Aluminum	Remainder	

AlcoTec Wire Company hereby certifies that the material covered by this report has been inspected in accordance with and been found to meet the applicable requirements of specification AWS A5.10-92 and any order requirements listed below.

All Packaging materials are in compliance with CONEG legislation.

Additional Order Requirements:

V.P. - Quality Control

FROM :6177490165 TO : R063 P.02/02

HARRIS
SOLDERING, BRAZING & WELDING PRODUCTS

J. W. HARRIS CO., INC. | 10930 DEERFIELD ROAD | CINCINNATI, OHIO 45242

J. W. Harris Co
Certificate of Con

Date _____

Date Shipped _____

Order No. _____

Sold To: AIRCO NEW ENGLAND
90 RESEARCH ROAD
HINGHAM, MA 02043

Shipped To: Process Systems
PO 70015R

P.O. No. PO#

Item	Weight	Size	Alloy	Heat No.
1.	100 LB	1/16 x 36	Alum	0294
2.				
3.				

PSI QC CW

Comments:

BOC GASES
90 RESEARCH ROAD
HINGHAM, MA 02043

Alloy	AWS A.510-00, ASME SFA 5.10		QQ-R-566B Class	Si	Fe	Cu	Mn	Mg	Cr	Zn	Ti	Percent Other Elem Each
1100 Aluminum (B)	ER1100	R1100	1100	A	A	0.05-0.20	[illegible]					0.05
2319 Aluminum (C)	ER2319	R2319	2319	0.20	0.30	5.8-6.8	[illegible]	0.02		[illegible]	0.10-0.20	0.05
4043 Aluminum	ER4043	R4043	4043	4.5-5.0	0.8	0.30	0.05	0.05		[illegible]	0.20	0.05
710 Aluminum	ER4047	R4047	4047	11.0-13.0	0.8	0.30	0.15	0.10		[illegible]		0.05
5103 Aluminum	ER5103	R5103	5103	.40	0.40	0.10	0.50-1.0	4.3-5.2	0.05-0.25		[illegible]	0.05
5356 Aluminum	ER5356	R5356	5356	0.25	0.40	0.10		4.5-5.5	0.05-0.[illegible]			[illegible]
5554 Aluminum	ER5554	R5554	5[illegible]		0.40	0.10		[illegible]	0.05-0.[illegible]			[illegible]
55[illegible]	ER5556	R5556	5[illegible]		0.40	[illegible]			[illegible]			[illegible]
5[illegible]	ER5654	R5654	[illegible]		D	[illegible]		[illegible]	[illegible]			[illegible]

NOTES:

1. S[illegible] shown are maximum percentage [illegible] a minimum is [illegible]
2. [illegible] shall not exceed 0.0008 per[illegible]
A. S[illegible] plus iron shall not exceed 0.[illegible]
B. [illegible] content is the difference [illegible] 0.010 percent or more each, expressed [illegible] be less than [illegible]
C. Vanadium content shall be 0.05-0.15 percent. Zirconium content shall be 0.10-0.25 percent.
D. Silicon plus iron shall not exceed 0.45 percent.

We certify that the items and/or materials listed above are in accordanc applicable purchase specifications having passed our i[illegible]ctions as n

SANDVIK Steel

We make Quality happen . . .

MATERIAL CERTIFICATE

SANDVIK STEEL COMPANY

P.O. BOX 1220, SCRANTON, PA. 18501 PH. (717) 587-5191
PLANT LOCATION: INTERSTATE 81, WAVERLY EXIT 59

OLD TO: BOC GASES (AIRCO)
LISLE IL

SHIP TO: AIRCO-NEW ENGLAND
HINGHAM MA

USTOMER PURCHASE ORDER NO.: 43594

CERTIFICATE DATE: 10/18/96

NDVIK ORDER NO.: 94386

QUANTITY: PER PACKING NOTE

ORK ORDER / LOT NO.: 969410

TAG:

AWS A-5.9

STAINLESS STEEL WELDING WIRE TYPE ER 308L

DIAMETER: .045"

Filler Metal Analysis, %

Heat	C	Si	Mn	P	S	Cr	Ni
S710840	.015	.430	1.800	.016	.013	20.01	9.78

PSI QC CW

Mo	Cb/Nb	Ta	Ti	Cu	Cb/Nb+Ta	N
.050			.002	.050	.040	.050

1-12-97

The material has not come in contact with mercury or mercury-containing compounds.

"Material not touched by hand after final production process cleaning."

Material has been manufactured in accordance with Sandvik Steel Company Quality Manual Revision 10 dated October 1, 1995. Quality system approved to ISO-9002/ANSI/ASQC Q9002-1994.

PROCESS SYSTEMS
180 LBS
PO 70012R

engt H. Berg, Director, Quality and Metallurgy
aniel Damiani, Quality Engineer

6119)(10)

BOC GASES
90 RESEARCH ROAD
HINGHAM, MA 02043

(2)

CUSTOMER ORIGINAL

MATERIAL CERTIFICAT

SANDVIK Steel

We make Quality happen . . .

SANDVIK STEEL COMPANY
P.O. BOX 1220, SCRANTON, PA. 18501 PH. (717) 587-5191
PLANT LOCATION: INTERSTATE 81, WAVERLY EXIT 59

SOLD TO: BOC GASES (AIRCO)
LISLE IL

SHIP TO: PROCESS SYSTEMS INTL
WESTBORO MA

CUSTOMER PURCHASE ORDER NO.: 41276

CERTIFICATE DATE: 8/26/96

SANDVIK ORDER NO.: 88712

QUANTITY: PER PACKING NOTE

WORK ORDER / LOT NO.: 967451

TAG:

AWS A-5.9

STAINLESS STEEL WELDING WIRE TYPE ER 308L

DIAMETER: 3/32"

Filler Metal Analysis, %

Heat	C	Si	Mn	P	S	Cr	Ni
S710840	.015	.430	1.800	.016	.013	20.01	9.78

	Mo	Cb/Nb	Ta	Ti	Cu	Cb/Nb+Ta	N
	.050			.002	.050	.040	.050

PSI QC CW 10-7-96

The material has not come in contact with mercury or mercury-containing compounds.

"Material not touched by hand after final production process cleaning."

Material has been manufactured in accordance with Sandvik Steel Company Quality Manual Revision 10 dated October 1, 1995. Quality system approved to ISO-9002/ANSI/ASQC Q9002-1994.

Bengt H. Berg, Director, Quality and Metallurgy

15(66119)(10)

(21)

CUSTOMER ORIGINAL

SANDVIK Steel

We make Quality happen...

MATERIAL CERTIFICAT

SANDVIK STEEL COMPANY

P.O. BOX 1220, SCRANTON, PA. 18501 PH. (717) 587-5191

PLANT LOCATION: INTERSTATE 81, WAVERLY EXIT 59

SOLD TO: BOC GASES

SHIP TO: PROCESS SYSTEMS
WESTBORO MA 01581

CUSTOMER PURCHASE ORDER NO.: 700603R//V59049045000

CERTIFICATE DATE: 6/18/96

SANDVIK ORDER NO.: TK # 591854

QUANTITY: 60 LBS 308L x 36

WORK ORDER / LOT NO.: 965227

TAG:

AWS A-5.9

STAINLESS STEEL WELDING WIRE TYPE ER 308L

DIAMETER: 3/32"

Filler Metal Analysis, %

Heat	C	Si	Mn	P	S	Cr	Ni
S709276	.019	.430	1.800	.018	.012	19.92	9.82

	Mo	Cb/Nb	Ta	Ti	Cu	Cb/Nb+Ta	N
PSI QC CW	.080			.002	.130	.030	.045

The material has not come in contact with mercury or mercury-containing compounds.

"Material not touched by hand after final production process cleaning."

Material has been manufactured in accordance with Sandvik Steel Company Quality Manual Revision 10 dated October 1, 1995. Quality system approved to ISO-9002/ANSI/ASQC Q9002-1994.

Bengt H. Berg, Director, Quality and Metallurgy

15(66119)(10)

SANDVIK Steel

We make Quality happen . . .

MATERIAL CERTIFICAT

SANDVIK STEEL COMPANY
P.O. BOX 1220, SCRANTON, PA. 18501 PH. (717) 587-5191
PLANT LOCATION: INTERSTATE 81, WAVERLY EXIT 59

BOC GASES

SOLD TO: 90 RESEARCH ROAD
HINGHAM, MA 02043

SHIP TO: PROCESS SYSTEMS INTL
WESTBORO MA 01581

CUSTOMER PURCHASE ORDER NO.: 700603r/V59049045000
TK 591854-02

CERTIFICATE DATE: 6/17/96

SANDVIK ORDER NO.:

QUANTITY: 120 LBS er308L 1/16 x 36

WORK ORDER / LOT NO.: 965225

TAG:

AWS A-5.9

STAINLESS STEEL WELDING WIRE TYPE ER 308L DIAMETER: 1/16"

Filler Metal Analysis, %

Heat	C	Si	Mn	P	S	Cr	Ni
S708727	.014	.390	1.800	.016	.012	20.20	9.87

	Mo	Cb/Nb	Ta	Ti	Cu	Cb/Nb+Ta	N
	.050			.003	.040	.030	.060

PSI QC CW

The material has not come in contact with mercury or mercury-containing compounds.

"Material not touched by hand after final production process cleaning."

Material has been manufactured in accordance with Sandvik Steel Company Quality Manual Revision 10 dated October 1, 1995. Quality system approved to ISO-9002/ANSI/ASQC Q9002-1994.

Bengt H. Berg, Director, Quality and Metallurgy

15(66119)(10)

SANDVIK Steel

We make Quality happen . . .

MATERIAL CER...

SANDVIK STEEL COMPANY

P.O. BOX 1220, SCRANTON, PA. 18501 PH. (717) 587-5191

PLANT LOCATION: INTERSTATE 81, WAVERLY EXIT 59

SOLD TO: BOC GASES (AIRCO)
LISLE IL

SHIP TO: AIRCO-NEW ENGLAND
process systems intl HINGHAM MA
westboro, Ma.

CUSTOMER PURCHASE ORDER NO.: 42100

CERTIFICATE DATE: 9/27/96

SANDVIK ORDER NO.: 90814

PO-700627-V59049-041

QUANTITY: PER PACKING NOTE

WORK ORDER / LOT NO.: 968845

TAG:

AWS A-5.9

STAINLESS STEEL WELDING WIRE TYPE ER 308L

DIAMETER: .045"

Filler Metal Analysis, %

Heat	C	Si	Mn	P	S	Cr	Ni
S437864	.013	.430	1.720	.020	.013	19.88	9.98

PSI QC CW

Mo	Cb/Nb	Ta	Ti	Cu	Cb/Nb+Ta	N
.250	.010		.005	.150		.055

The material has not come in contact with mercury or mercury-containing compounds.

"Material not touched by hand after final production process cleaning."

Material has been manufactured in accordance with Sandvik Steel Company Quality Manual Revision 10 dated October 1, 1995. Quality system approved to ISO-9002/ANSI/ASQC Q9002-1994.

Bengt H. Berg, Director, Quality and Metallurgy
Daniel Damiani, Quality Engineer

15(66119)(10)

BOC G...
90 RESEARCH R...
HINGHAM, MA 02...

29

SANDVIK Steel

We make Quality happen . . .

MATERIAL CERTIFICAT

SANDVIK STEEL COMPANY

P.O. BOX 1220, SCRANTON, PA. 18501 PH. (717) 587-5191

PLANT LOCATION: INTERSTATE 81, WAVERLY EXIT 59

SOLD TO: BOC GASES (AIRCO)
LISLE IL

SHIP TO: AIRCO-NEW ENGLAND
HINGHAM MA

CUSTOMER PURCHASE ORDER NO.: 42100

CERTIFICATE DATE: 9/04/96

SANDVIK ORDER NO.: 90816

QUANTITY: PER PACKING NOTE

WORK ORDER / LOT NO.: 967820

TAG:

AWS A-5.9

STAINLESS STEEL WELDING WIRE TYPE ER 308L

DIAMETER: 1/8"

Filler Metal Analysis, %

Heat	C	Si	Mn	P	S	Cr	Ni
S710840	.015	.430	1.800	.016	.013	20.01	9.78

PSI QC CW

Mo	Cb/Nb	Ta	Ti	Cu	Cb/Nb+Ta	N
.050			.002	.050	.040	.050

The material has not come in contact with mercury or mercury-containing compounds.

"Material not touched by hand after final production process cleaning."

Material has been manufactured in accordance with Sandvik Steel Company Quality Manual Revision 10 dated October 1, 1995. Quality system approved to ISO-9002/ANSI/ASQC Q9002-1994.

PROCESS SYSTEMS
700627-R/V59049-044
TK 693421

Bengt H. Berg, Director, Quality and Metallurgy

240 LB

15(66119)(10)

BOC GASES
90 RESEARCH ROAD
HINGHAM, MA 02043

SANDVIK Steel

We make Quality happen . . .

MATERIAL CERTIFICAT

SANDVIK STEEL COMPANY

P.O. BOX 1220, SCRANTON, PA. 18501 PH. (717) 587-5191

PLANT LOCATION: INTERSTATE 81, WAVERLY EXIT 59

OLD TO: BOC GASES (AIRCO)
LISLE IL

SHIP TO: AIRCO-NEW ENGLAND
HINGHAM MA

USTOMER PURCHASE ORDER NO.: 42100

CERTIFICATE DATE: 9/04/96

ANDVIK ORDER NO.: 90816

QUANTITY: PER PACKING NOTE

'ORK ORDER / LOT NO.: 967818

TAG:

AWS A-5.9

STAINLESS STEEL WELDING WIRE TYPE ER 308L

DIAMETER: 1/16"

Filler Metal Analysis, %

Heat	C	Si	Mn	P	S	Cr	Ni
S710840	.015	.430	1.800	.016	.013	20.01	9.78
	Mo	Cb/Nb	Ta	Ti	Cu	Cb/Nb+Ta	N
	.050	—	—	.002	.050	.040	.050

PSI QC C.W

The material has not come in contact with mercury or mercury-containing compounds.

"Material not touched by hand after final production process cleaning."

Material has been manufactured in accordance with Sandvik Steel Company Quality Manual Revision 10 dated October 1, 1995. Quality system approved to ISO-9002/ANSI/ASQC Q9002-1994.

PROCESS SYSTEMS
700627-R/V59049-042
TK 693415
50 LB.

Bengt E. Berg, Director, Quality and Metallurgy

5(66119)(10)

BOC GA[illegible]
[illegible]CH ROAD
[illegible] A 02043

SANDVIK Steel

We make Quality happen . . .

MATERIAL CERTIFICAT

SANDVIK STEEL COMPANY

P.O. BOX 1220, SCRANTON, PA. 18501 PH. (717) 587-5191
PLANT LOCATION: INTERSTATE 81, WAVERLY EXIT 59

OLD TO: BOC GASES (AIRCO)
LISLE IL

SHIP TO: process systems

CUSTOMER PURCHASE ORDER NO.: 693415

CERTIFICATE DATE: 10/03/96

SANDVIK ORDER NO.:

QUANTITY: 60 lbs

WORK ORDER / LOT NO.: 70627-r/v59049-042

TAG:

AWS A-5.9

STAINLESS STEEL WELDING WIRE TYPE ER 308L

DIAMETER: 1/16"

Filler Metal Analysis, %

Heat	C	Si	Mn	P	S	Cr	Ni
S437864	.013	.430	1.720	.020	.013	19.88	9.98

	Mo	Cb/Nb	Ta	Ti	Cu	Cb/Nb+Ta	N
	.250	.010		.005	.150		.055

PSI QC CW

The material has not come in contact with mercury or mercury-containing compounds.

"Material not touched by hand after final production process cleaning."

Material has been manufactured in accordance with Sandvik Steel Company Quality Manual Revision 10 dated October 1, 1995. Quality system approved to ISO-9002/ANSI/ASQC Q9002-1994.

Bengt H. Berg, Director, Quality and Metallurgy
Daniel Damiani, Quality Engineer

15(661(9)(10)

BOC GASES
RESEARCH ROAD
HINGHAM, MA 02043

5

2

SANDVIK Steel

We make Quality happen . . .

MATERIAL CERTIFICAT

SANDVIK STEEL COMPANY

P.O. BOX 1220, SCRANTON, PA. 18501 PH. (717) 587-5191

PLANT LOCATION: INTERSTATE 81, WAVERLY EXIT 59

SOLD TO: BOC GASES (AIRCO)
LISLE IL

SHIP TO: AIRCO-NEW ENGLAND
HINGHAM MA

CUSTOMER PURCHASE ORDER NO.: 42100

CERTIFICATE DATE: 9/03/96

SANDVIK ORDER NO.: 90816

QUANTITY: PER PACKING NOTE

WORK ORDER / LOT NO.: 967819

TAG:

AWS A-5.9

STAINLESS STEEL WELDING WIRE TYPE ER 308L

DIAMETER: 3/32"

Filler Metal Analysis, %

Heat	C	Si	Mn	P	S	Cr	Ni
S437864	.013	.430	1.720	.020	.013	19.88	9.98

PSI QC CW

Mo	Cb/Nb	Ta	Ti	Cu	Cb/Nb+Ta	N
.250	.010		.005	.150		.055

The material has not come in contact with mercury or mercury-containing compounds.

"Material not touched by hand after final production process cleaning."

Material has been manufactured in accordance with Sandvik Steel Company Quality Manual Revision 10 dated October 1, 1995. Quality system approved to ISO-9002/ANSI/ASQC Q9002-1994.

PROCESS SYSTEMS
700627-R/V59049-04
TK 693420
240 LB.

Bengt H. Berg, Director, Quality and Metallurgy

15(66119)(10)

BOC GASES
30 RESEARCH ROAD
HINGHAM, MA 02043

28

AlcoTec

A Partnership of Alcoa Weld Wire Company, Inc.
and Aluminum Technology Corporation

AlcoTec Wire Company
2750 Aero Park Drive
Traverse City, MI 49686 USA
(616) 941-4111 Phone
(616) 941-9154 Fax

05/07/96

CERTIFIED MATERIAL REPORT

Alloy	Diameter	Package	Lot Number
R5183	.125	TIG Rod Box	362769

P.O.# - 72454

PSI
QC
CW

Chemical Composition limits

Element	Minimum %	Maximum %
Si	---	0.40
Fe	---	0.40
Cu	---	0.10
Mn	0.50	1.0
Mg	4.3	5.2
Cr	0.05	0.25
Zn	---	0.25
Ti	---	0.15
Be	---	0.0008
Other Each	---	0.05
Other Total	---	0.15
Aluminum	Remainder	

AlcoTec Wire Company hereby certifies that the material covered by this report has been inspected in accordance with and been found to meet the applicable requirements of specification AWS A5.10-92 and any order requirements listed below.

All Packaging materials are in compliance with CONEG legislation.

Additional Order Requirements:

Control

Certifying Signature

24

HARRIS
SOLDERING, BRAZING & WELDING PRODUCTS

J. W. HARRIS CO., INC. | 10930 DEERFIELD ROAD | CINCINNATI, OHIO 45242

J..W. Harris Comp
Certificate of Compl

Date 10-17-96

Sold To:
AIRCO NEW ENGLAND
90 RESEARCH ROAD
HINGHAM, MA 02043

Shipped To: PROCESS SYSTEMS INTL
WESTBORO MA.

Date Shipped 10-18-96

Order No. 712222

P.O. No. PO#

Item	Weight	Size	Alloy	Heat No.
1.	9LB	5/32 X 36	ALUM	AA1005183D
2.	10LB	5/32 X 36	ALUM	7295
3.				

PS QC CW

Comments:
P.O. 700643-R/V5904904302

Alloy	AWS A5.10-88 ASME SFA5.10		QQ-R-566D Class	Si	Fe	Cu	Mn	Mg	Cr	Zn	Ti	Percent Other Element Each	Ti
1100 Aluminum (B)	ER1100	R1100	1100	A	A	0.05-0.20	0.05			0.10		0.05	
2319 Aluminum (C)	ER2319	R2319	2319	0.20	0.30	5.8-6.8	0.20-0.40	0.02		0.10	0.10-0.20	0.05	
4043 Aluminum	ER4043	R4043	4043	4.5-6.0	0.8	0.30	0.05	0.05		0.10	0.20	0.05	
718 Aluminum	ER4047	R4047	4047	11.0-13.0	0.8	0.30	0.15	0.10		0.20		0.05	
5183 Aluminum	ER5183	R5183	5183	.40	0.40	0.10	0.50-1.0	4.3-5.2	0.05-0.25	0.25	0.15	0.05	
5356 Aluminum	ER5356	R5356	5356	0.25	0.40	0.10	0.05-0.20	4.5-5.5	0.05-0.20	0.10	0.06-0.20	0.05	
5554 Aluminum	ER5554	R5554	5554	0.25	0.40	0.10	0.50-1.0	2.4-3.0	0.05-0.20	0.25	0.05-0.20	0.05	
5556 Aluminum	ER5556	R5556	5556	0.25	0.40	0.10	0.50-1.0	4.7-5.5	0.05-0.20	0.25	0.05-0.20	0.05	
5654 Aluminum	ER5654	R5654	5654	D	D	0.05	0.01	3.1-3.9	0.15-0.35	0.20	0.05-0.15	0.05	

NOTES:

1. Single values shown are maximum percentages, except where a minimum is specified.
2. Beryllium shall not exceed 0.0008 percent, all alloys.
A. Silicon plus iron shall not exceed 0.95 percent.
B. The aluminum content is the difference between 100.00 percent and the sum of all other metallic elements present in amounts of 0.010 percent or more each, expressed to the second decimal before determining the sum, and shall not be less than 99.0.
C. Vanadium content shall be 0.05-0.15 percent. Zirconium content shall be 0.10-0.25 percent.
D. Silicon plus iron shall not exceed 0.45 percent.

BOC GA...
90 RESEARCH ...
HINGHAM, MA 02043

30

HARRIS
SOLDERING BRAZING & WELDING PRODUCTS

J. W. HARRIS CO., INC. | 10930 DEERFIELD ROAD | CINCINNATI, OHIO 45242

J. W. Harris Comp
Certificate of Compl

Date _____

Sold To:
AIRCO NEW ENGLAND
90 RESEARCH ROAD
HINGHAM, MA 02043

P.O. No. PO#

Shipped To: PROCESS SYSTEMS INTL
PO 700643R/V6904.9043000

Date Shipped 10-25-96

Order No. 713960-01

Item	Weight	Size	Alloy	Heat No.
1.	50LB	5/32	ALUM	0233
2.				
3.				

PSI
QC
CW

Comments:

BOC
90 RESEARCH
HINGHAM, MA 02043

Alloy	AWS A5.10-88 ASME SFA5.10		QQ-R-566B Class	Si	Fe	Cu	Mn	Mg	Cr	Zn	Ti	Percent Other Element Each	Ti
1100 Aluminum (B)	ER1100	R1100	1100	A	A	0.05-0.20	0.05			0.10		0.05	
2319 Aluminum (C)	ER2319	R2319	2319	0.20	0.30	5.8-6.8	0.20-0.40	0.02		0.10	0.10-0.20	0.05	
4043 Aluminum	ER4043	R4043	4043	4.5-6.0	0.8	0.30	0.05	0.05		0.10	0.20	0.05	
718 Aluminum	ER4047	R4047	4047	11.0-13.0	0.8	0.30	0.15	0.10		0.20		0.05	
5183 Aluminum	ER5183	R5183	5183	.40	0.40	0.10	0.50-1.0	4.3-5.2	0.05-0.25	0.25	0.15	0.05	
5356 Aluminum	ER5356	R5356	5356	0.25	0.40	0.10	0.05-0.20	4.5-5.5	0.05-0.20	0.10	0.06-0.20	0.05	
5554 Aluminum	ER5554	R5554	5554	0.25	0.40	0.10	0.50-1.0	2.4-3.0	0.05-0.20	0.25	0.05-0.20	0.05	
5556 Aluminum	ER5556	R5556	5556	0.25	0.40	0.10	0.50-1.0	4.7-5.5	0.05-0.20	0.25	0.05-0.20	0.05	
5654 Aluminum	ER5654	R5654	5654	D	D	0.05	0.01	3.1-3.9	0.15-0.35	0.20	0.05-0.15	0.05	

NOTES:

1. Single values shown are maximum percentages, except where a minimum is specified.
2. Beryllium shall not exceed 0.0000 percent, all alloys.
A. Silicon plus iron shall not exceed 0.95 percent.
B. the aluminum content is the difference between 100.00 percent and the sum of all other metallic elements present in amounts of 0.010 percent or more each, expressed to the second decimal before determing the sum, and shall not be less than 99.0.
C. Vanadium content shall be 0.05-0.15 percent. Zirconium content shall be 0.10-0.25 percent.
D. Silicon plus iron shall not exceed 0.45 percent.

We certify that the items and/or materials listed ab

FROM :AIRCO/BOC GASES HINGHM TO 5083705930 1996-10-31 04:01 #926 P.02/02

HARRIS
SOLDERING, BRAZING & WELDING PRODUCTS

J. W. HARRIS CO., INC. | 10930 DEERFIELD ROAD | CINCINNATI, OHIO 45242

J. W. Harris Co
Certificate of Con

Date 10-31-96

Sold To: AIRCO NEW ENGLAND
90 RESEARCH ROAD
HINGHAM, MA 02043

Shipped To: PROCESS SYSTEMS
700643-R/V5904904300

Date Shipped

Order No. 712225

P.O. No. PO#

Item	Weight	Size	Alloy	Heat No.
1.	50	5/32	ALUM	96248
2.				
3.				

PSI
QC
CW

Comments:

Alloy	AWS A5.10-00, ASME SFA5.10		QQ-R-566D Class	Si	Fe	Cu	Mn	Mg	Cr	Zn	Ti	Percer Other Ele Each
1100 Aluminum (B)	ER1100	R1100	1100	A	A	0.05-0.20	0.05			0.10		0.05
2319 Aluminum (C)	ER2319	R2319	2319	0.20	0.30	5.8-6.8	0.20-0.40	0.02		0.10	0.10-0.20	0.05
4043 Aluminum	ER4043	R4043	4043	4.5-6.0	0.8	0.30	0.05	0.05		0.10	0.20	0.05
710 Aluminum	ER4047	R4047	4047	11.0-13.0	0.8	0.30	0.15	0.10		0.20		0.05
5183 Aluminum	ER5183	R5183	5183	.40	0.40	0.10	0.50-1.0	4.3-5.2	0.05-0.25	0.25	0.15	0.05
5356 Aluminum	ER5356	R5356	5356	0.25	0.40	0.10	0.05-0.20	4.5-5.5	0.05-0.20	0.10	0.06-0.20	0.05
5554 Aluminum	ER5554	R5554	5554	0.25	0.40	0.10	0.50-1.0	2.4-3.0	0.05-0.20	0.25	0.05-0.20	0.05
5556 Aluminum	ER5556	R5556	5556	0.25	0.40	0.10	0.50-1.0	4.7-5.5	0.05-0.20	0.25	0.05-0.20	0.05
5654 Aluminum	ER5654	R5654	5654	D	D	0.05	0.01	3.1-3.9	0.15-0.35	0.20	0.05-0.15	0.05

NOTES:

1. Single values shown are maximum percentages, except where a minimum is specified.
2. Beryllium shall not exceed 0.0000 percent, all alloys.
A. Silicon plus iron shall not exceed 0.95 percent.
B. The aluminum content is the difference between 100.00 percent and the sum of all other metallic elements present in amounts of 0.010 percent or more each, expressed to the second decimal before determing the sum, and shall not be less than 99.0.
C. Vanadium content shall be 0.05-0.15 percent. Zirconium content shall be 0.10-0.25 percent.
D. Silicon plus iron shall not exceed 0.45 percent.

We certify that the items and/or materials lised above are in accordanc
applicable purchase specifications having passed inspections as

AlcoTec

A Partnership of Alcoa Weld Wire Company, Inc.
and Aluminum Technology Corporation

AlcoTec Wire Company
2750 Aero Park Drive
Traverse City, MI 49686 USA
(616) 941-4111 Phone
(616) 941-9154 Fax
alcotec@traverse.com E-mail

11/13/96

CERTIFIED MATERIAL REPORT

Alloy	Diameter	Package	Lot Number
R5183	.156	TIG Rod Box	362884

P.O.# - 86330

Chemical Composition limits

Element	Minimum %	Maximum %
Si	---	0.40
Fe	---	0.40
Cu	---	0.10
Mn	0.50	1.0
Mg	4.3	5.2
Cr	0.05	0.25
Zn	---	0.25
Ti	---	0.15
Be	---	0.0008
Other Each	---	0.05
Other Total	---	0.15
Aluminum	Remainder	

PSI QC CW

AlcoTec Wire Company hereby certifies that the material covered by this report has been inspected in accordance with and been found to meet the applicable requirements of specification AWS A5.10-92 and any order

All Packaging materials are in compliance with CONEG legislation.

Additional Order Requirements:

V.P. - Quality Control

AlcoTec

A Partnership of Alcoa Weld Wire Company, Inc.
and Aluminum Technology Corporation

AlcoTec Wire Company
2750 Aero Park Drive
Traverse City, MI 49686 USA
(616) 941-4111 Phone
(616) 941-9154 Fax
alcotec@traverse.com E-mail

11/11/96

CERTIFIED MATERIAL REPORT

Alloy	Diameter	Package	Lot Number
R5183	.156	TIG Rod Box	362884

P.O.# - 86330

Chemical Composition limits

Element	Minimum %	Maximum %
Si	---	0.40
Fe	---	0.40
Cu	---	0.10
Mn	0.50	1.0
Mg	4.3	5.2
Cr	0.05	0.25
Zn	---	0.25
Ti	---	0.15
Be	---	0.0008
Other Each	---	0.05
Other Total	---	0.15
Aluminum	Remainder	

PSI
QC
CW

AlcoTec Wire Company hereby certifies that the material covered by this report has been inspected in accordance with and been found to meet the applicable requirements of specification AWS A5.10-92 and any order requirements listed below.

All Packaging materials are in compliance with CONEG legislation.

Additional Order Requirements:

V.P. - Quality Control

3

SANDVIK Steel

We make Quality happen . . .

MATERIAL CERTIFICA

SANDVIK STEEL COMPANY
P.O. BOX 1220, SCRANTON, PA. 18501 PH. (717) 587-5191
PLANT LOCATION: INTERSTATE 81, WAVERLY EXIT 59

SOLD TO: BOC GASES (AIRCO)
LISLE IL

SHIP TO: PROCESS SYSTEMS

CUSTOMER PURCHASE ORDER NO.: 700650-R/VS90490 4500

CERTIFICATE DATE: 9/04/96

SANDVIK ORDER NO.: 90816

QUANTITY: 60 LB

WORK ORDER / LOT NO.:

TAG:

AWS A-5.9

STAINLESS STEEL WELDING WIRE TYPE ER 308L

PSI QC CW

DIAMETER: 1/8"

Filler Metal Analysis, %

Heat	C	Si	Mn	P	S	Cr	Ni
S710840	.015	.430	1.800	.016	.013	20.01	9.78

	Mo	Cb/Nb	Ta	Ti	Cu	Cb/Nb+Ta	N
	.050	—		.002	.050	.040	.050

The material has not come in contact with mercury or mercury-containing compounds.

"Material not touched by hand after final production process cleaning."

Material has been manufactured in accordance with Sandvik Steel Company Quality Manual Revision 10 dated October 1, 1995. Quality system approved to ISO-9002/ANSI/ASQC Q9002-1994.

Bengt H. Berg, Director, Quality and Metallurgy

15(66119)(10)

BOC GASES
RESEARCH
HINGHAM, MA 02043

(35)

SANDVIK Steel

We make Quality happen ...

MATERIAL CERTIFICATE

SANDVIK STEEL COMPANY
P.O. BOX 1220, SCRANTON, PA 18501, PH: (717) 587-5191
PLANT LOCATION: INTERSTATE 81, WAVERLY EXIT 59

SOLD TO: BOC GASES (AIRCO)
LISLE IL

SHIP TO: PROCESS SYSTEM

CUSTOMER PURCHASE ORDER NO.: 700650-R/V5904904500

CERTIFICATE DATE: 10/04/96

SANDVIK ORDER NO.: 92899

QUANTITY: 184LB

WORK ORDER / LOT NO.:

TAG:

AWS A-5.9

PSI QC CW

STAINLESS STEEL WELDING WIRE TYPE ER 308L

DIAMETER: 1/8"

Filler Metal Analysis, %

Heat	C	Si	Mn	P	S	Cr	Ni
S437864	.013	.430	1.720	.020	.013	19.88	9.98

	Mo	Cb/Nb	Ta	Ti	Cu	Cb/Nb+Ta	N
	.250	.010		.005	.150		.055

The material has not come in contact with mercury or mercury-containing compounds.

"Material not touched by hand after final production process cleaning."

Material has been manufactured in accordance with Sandvik Steel Company Quality Manual Revision 10 dated October 1, 1995. Quality system approved to ISO-9002/ANSI/ASQC Q9002-1994.

Bengt H. Berg, Director, Quality and Metallurgy
Daniel Damiani, Quality Engineer

15(66119)(10)

BOC GASES
RESEARCH ROAD
...INGHAM, MA 02043

CUSTOMER ORIGINAL

HARRIS
SOLDERING BRAZING & WELDING PRODUCTS

J. W. HARRIS CO., INC. | 10930 DEERFIELD ROAD | CINCINNATI, OHIO 45242

J. W. Harris Comp
Certificate of Comp

Date _____

Sold To: AIRCO NEW ENGLAND
90 RESEARCH ROAD
HINGHAM, MA 02043

Shipped To: Process Systems Int'L
60 70015R/7741000

Date Shipped 3-28-97

Order No. 797282

P.O. No. PO#

Item	Weight	Size	Alloy	Heat No.
1.	40 LB	1/16 x 36	ALUM	0268
2.				
3.				

PSI QC CVI

Comments:

BOC GASES
90 RESEARCH ROAD
HINGHAM, MA 02043

Alloy	AWS A.510-00 ASME SFA.5.10		QQ-R-566B Class	Si	Fe	Cu	Mn	Mg	Cr	Zn	Ti	Percent Other Elemer Each
1100 Aluminum (B)	ER1100	R1100	1100	A	A	0.05-0.20	0.05			0.10		0.05
2319 Aluminum (C)	ER2319	R2319	2319	0.20	0.30	5.8-6.8	0.20-0.40	0.02		0.10	0.10-0.20	0.05
4043 Aluminum	ER4043	R4043	4043	4.5 -6.0	0.8	0.30	0.05	0.05		0.10	0.20	0.05
710 Aluminum	ER4047	R4047	4047	11.0 - 13.0	0.8	0.30	0.15	0.10		0.20		0.05
5183 Aluminum	ER5183	R5183	5183	.40	0.40	0.10	0.50-1.0	4.3-5.2	0.05-0.25	0.25	0.15	0.05
5356 Aluminum	ER5356	R5356	5356	0.25	0.40	0.10	0.05-0.20	4.5-5.5	0.05-0.20	0.10	0.06-0.20	0.05
5554 Aluminum	ER5554	R5554	5554	.0.25	0.40	0.10	0.50-1.0	2.4-3.0	0.05-0.20	0.25	0.05-0.20	0.05
5556 Aluminum	ER5556	R5556	5556	0.25	0.40	0.10	0.50-1.0	4.7-5.5	0.05-0.20	0.25	0.05-0.20	0.05
5654 Aluminum	ER5654	R5654	5654	D	D	0.05	0.01	3.1-3.9	0.15-0.35	0.20	0.05-0.15	0.05

NOTES:

1. Single values shown are maximum percentages, except where a minimum is specified.
2. Beryllium shall not exceed 0.0008 percent, all alloys.
A. Silicon plus iron shall not exceed 0.95 percent.
B. The aluminum content is the difference between 100.00 percent and the sum of all other metallic elements present in amounts of 0.010 percent or more each, expressed to the second decimal before determing the sum, and shall not be less than 99.0.
C. Vanadium content shall be 0.05-0.15 percent. Zirconium content shall be 0.10-0.25 percent.
D. Silicon plus iron shall not exceed 0.45 percent.

We certify that the items and/or materials lised above are in accordance applicable purchase specifications having passed our ections as not

HARRIS-WELCO | 1051 YORK ROAD P.O. BOX 69 | KINGS MOUNTAIN, NC 28086

SOLDERING, BRAZING & WELDING PRODUCTS

CERTIFICATE OF COMPLIANCE

RML ISSUE DATE: 04-15-96

PROCESS SYSTEMS
PO 70015R/7741000
10 LBS 4043 1/16X36

HEAT NUMBER/LOT NUMBER: 0243

CHEMICAL COMPOSITION LIMITS

PSI
QC
CW

ALLOY: 4043
SPEC : AWS A5.10R/ER4043/AMS 4190D
ASME SFA 5.10/QQ-R-566-B

SILICON	4.500 -	6.000	TITANIUM		.200
COPPER		.300	MAGNESIUM		.050
IRON		.800	ZINC		.100
BERYLLIUM		.0008	REMAINDER		ALUMINUM
OTHER		.15			

SINGLE VALUES ARE MAXIMUM UNLESS OTHERWISE SPECIFIED.

SAFETY SILV, STAY SILV, STAY CLEAN, STAY BRITE & BRIDGIT ARE REGISTERED TRADEMARKS OF J.W. HARRIS CO., INC

WE CERTIFY THAT THE ITEMS AND/OR MATERIALS LISTED ABOVE ARE IN ACCORDANCE WITH ALL APPLICABLE PURCHASE SPECIFICATIONS HAVING PASSED OUR INSPECTIONS AS NOTED.

Robin M. Lee
CERTIFICATION CLERK

BOC GASES
90 RESEARCH ROAD
HINGHAM, MA 02043

(3)

SANDVIK Steel

We make Quality happen...

MATERIAL CERTIFICA

SANDVIK STEEL COMPANY
P.O. BOX 1220, SCRANTON, PA. 18501 PH. (717) 587-5191
PLANT LOCATION: INTERSTATE 81, WAVERLY EXIT 59

SOLD TO: PROCESS SYSTEMS

SHIP TO: AIRCO-NEW ENGLAND
HINGHAM MA

CUSTOMER PURCHASE ORDER NO.: 7005R/774101500

CERTIFICATE DATE: 3/20/97

SANDVIK ORDER NO.:

QUANTITY: 180 LBS.

WORK ORDER / LOT NO.:

TAG:

AWS A-5.9

STAINLESS STEEL WELDING WIRE TYPE ER 308L

DIAMETER: 1/16"

Filler Metal Analysis, %

Heat	C	Si	Mn	P	S	Cr	Ni
S711375	.007	.400	1.800	.014	.012	20.02	9.85
	Mo	Cb/Nb	Ta	Ti	Cu	Cb/Nb+Ta	N
	.010			.002	.030	.030	.055

PSI QC CW

The material has not come in contact with mercury or mercury-containing compounds.

"Material not touched by hand after final production process cleaning."

Material has been manufactured in accordance with Sandvik Steel Company Quality Manual Revision 10 dated October 1, 1995. Quality system approved to ISO-9002/ANSI/ASQC Q9002-1994.

Keith M. Hottle, Manager, Quality & Metallurgy
Celeste Brennan, Sr. Quality Engineer

Celeste Brennan/cc

15(66119)(10)

BOC GASES
90 RESEARCH ROAD
HINGHAM, MA 02043

SANDVIK Steel

We make Quality happen...

MATERIAL CERTIFICA

SANDVIK STEEL COMPANY

P.O. BOX 1220, SCRANTON, PA. 18501 PH. (717) 587-5191
PLANT LOCATION: INTERSTATE 81, WAVERLY EXIT 59

SOLD TO: BOC GASES (AIRCO)
LISLE IL

SHIP TO: AIRCO-NEW ENGLAND
HINGHAM MA

CUSTOMER PURCHASE ORDER NO.: 42100

SANDVIK ORDER NO.: 90816

WORK ORDER / LOT NO.: 967819

PSI QC CW

CERTIFICATE DATE: 9/03/96

QUANTITY: PER PACKING NOTE

TAG:

AWS A-5.9

STAINLESS STEEL WELDING WIRE TYPE ER 308L

DIAMETER: 3/32"

Filler Metal Analysis, %

Heat	C	Si	Mn	P	S	Cr	Ni
S710840 [redacted]	.013	.430	1.720	.020	.013	19.88	9.98

Mo	Cb/Nb	Ta	Ti	Cu	Cb/Nb+Ta	N
.250	.010		.005	.150		.055

The material has not come in contact with mercury or mercury-containing compounds.

"Material not touched by hand after final production process cleaning."

Material has been manufactured in accordance with Sandvik Steel Company Quality Manual Revision 10 dated October 1, 1995. Quality system approved to ISO-9002/ANSI/ASQC Q9002-1994.

PROCESS SYSTEMS
70018R/774101500

Bengt H. Berg, Director, Quality and Metallurgy

15(66119)(10)

BOC GASES
90 RESEARCH ROAD
HINGHAM, MA 02043

4C

MATERIAL CERTIFICAT

SANDVIK Steel

We make Quality happen

SANDVIK STEEL COMPANY

P.O. BOX 1220, SCRANTON, PA. 18501 PH. (717) 587-5191
PLANT LOCATION: INTERSTATE 81, WAVERLY EXIT 59

SOLD TO: BOC GASES (AIRCO)
LISLE IL

SHIP TO: AIRCO-NEW ENGLAND
HINGHAM MA

CUSTOMER PURCHASE ORDER NO.: 46682

CERTIFICATE DATE: 4/21/97

SANDVIK ORDER NO.: 12603

QUANTITY: PER PACKING NOTE

WORK ORDER / LOT NO.: 978457

TAG:

AWS A-5.9

STAINLESS STEEL WELDING WIRE TYPE ER 308L

DIAMETER: 3/32"

Filler Metal Analysis, %

Heat	C	Si	Mn	P	S	Cr	Ni
S712976 -6028	.013	.440	1.800	.015	.015	19.96	9.63

PSI QC CW 4-28-97

	Mo	Cb/Nb	Ta	Ti	Cu	Cb/Nb+Ta	N
	.070			.002	.060	.030	.035

PROCESS SYSTEMS
P.O. 70018R/77410500
SHIPPED 4-25-97 ORDER #805966-01

The material has not come in contact with mercury or mercury-containing compounds.

"Material not touched by hand after final production process cleaning."

Material has been manufactured in accordance with Sandvik Steel Company Quality Manual Revision 10 dated October 1, 1995. Quality system approved to ISO-9002/ANSI/ASQC Q9002-1994.

Keith M. Hottle, Manager, Quality & Metallurgy
Celeste Brennan, Sr. Quality Engineer

Celeste Brennan/cp

15(66119)(10)

BOC GASES
90 RESEARCH ROAD
HINGHAM, MA 02043

(3) (41)

SANDVIK
Steel

We make Quality happen...

MATERIAL CERTIFICA

SANDVIK STEEL COMPANY

P.O. BOX 1220, SCRANTON, PA. 18501 PH. (717) 587-5191

PLANT LOCATION: INTERSTATE 81, WAVERLY EXIT 59

SOLD TO: BOC GASES (AIRCO)
LISLE IL

SHIP TO: PROCESS SYSTEMS INTL
WESTBOTO MA

CUSTOMER PURCHASE ORDER NO.: 47334

CERTIFICATE DATE: 4/29/97

SANDVIK ORDER NO.: 14445

QUANTITY: PER PACKING NOTE

WORK ORDER / LOT NO.: 970470

TAG:

AWS A-5.9

STAINLESS STEEL WELDING WIRE TYPE ER 308L

DIAMETER: .035"

Filler Metal Analysis, %

Heat	C	Si	Mn	P	S	Cr	Ni
S711375	.007	.400	1.800	.014	.012	20.02	9.85

Mo	Cb/Nb	Ta	Ti	Cu	Cb/Nb+Ta	N
.010			.002	.030	.030	.055

PSI QC CW

The material has not come in contact with mercury or mercury-containing compounds.

Keith M. Hottle, Manager, Quality & Metallurgy

15(03030,-REV.2)(10)

CUSTOMER ORIGINAL

42

AlcoTec

A Partnership of Alcoa Weld Wire Company, Inc.
and Aluminum Technology Corporation

AlcoTec Wire Company
2750 Aero Park Drive
Traverse City, MI 49686 USA
(616) 941-4111 Phone
(616) 941-9154 Fax
alcotec@traverse.com E-mail

1/8

01/13/97

CERTIFIED MATERIAL REPORT

Alloy	Diameter	Package	Lot Number
R5183	.125	TIG Rod Box	363423

PSI
QC
CW

P.O.# - 93118

Chemical Composition limits

Element	Minimum %	Maximum %
Si	---	0.40
Fe	---	0.40
Cu	---	0.10
Mn	0.50	1.0
Mg	4.3	5.2
Cr	0.05	0.25
Zn	---	0.25
Ti	---	0.15
Be	---	0.0008
Other Each	---	0.05
Other Total	---	0.15
Aluminum	Remainder	

AlcoTec Wire Company hereby certifies that the material covered by this report has been inspected in accordance with and been found to meet the applicable requirements of specification AWS A5.10-92 and any order requirements listed below.

All Packaging materials are in compliance with CONEG legislation.

Additional Order Requirements:

V.P. - Quality Control

RANOR, INC

BELLA DRIVE, P.O. BOX 458 • WESTMINSTER, MASSACHUSETTS 01473

Certificate of Compliance

The undersigned hereby certifies that the following material and/or services are in accordance with the requirements of Process Systems International, Inc.
Purchase Order Number 555822-00 and RANOR, INC Shop Order Number 7300FM

Quantity	Description, Part or Assembly Number	Material Type	Specification Number or Material Heat Number
1	Beam Splitter Chamber Per V049-4-003 Rev. 0 Ranor s/n 7300-02	SA240-304L	Material Supplied by P.S.I., Inc.
	Dimensional Inspection Reports & Stress Relief Chart attached		
	NCR No. 1012 Applies		

PSI Doc.# V049-8-634-02

Signature _____

Title Assistant Quality Assurance Manager

Date February 27, 1997

This certification shall be completed and signed by either an officer of the company, or a designated responsible person.

RANOR, INC

NONCONFORMANCE REPORT

FORM QA 12.1 REV. 6 (07/30/96)

NCR NUMBER	PAGE 1 OF 2
NCR- 1012	SKETCH ATTACHED ☐

JOB NUMBER	CUSTOMER	PURCHASE ORDER NUMBER	QUANTITY
7300 Flm	PSI	S55822-00	1

PART DESCRIPTION	DOCUMENT NUMBER AND REVISION	SERIAL NUMBER
BSC OVERALL ASSY LIGO VAC	V049-4-101 REV-1	-02

CODE/SPECIFICATION: ☐ ASME SECTION III ☐ SAFETY RELATED ☐ ASME SECTION VIII ☐ MIL SPEC ☒ COMMERCIAL

DESCRIPTION OF NONCONFORMANCE

ITEM	REQUIREMENT	NONCONFORMANCE
1	48.44 ±0.045 ZONE B-8	48.370, 48.392 -.025, -.003
2	66.00 ±0.03 ZONE B-8	66.056, 65.893 +.026, -.077
3	⊥ | .075 | B | ZONE C-8	0.083 +.008
4	// | .075 | C | ZONE C-8	0.126 +.051
5	// | .030 | A | ZONE B-6	0.070 +.04 "B" ONLY
6	// | .030 | B | ZONE C-5	0.042 +.012

REMARKS: SEE INSP LOG FOR DIMENSION LOCATION IN REGARDS TO DEGREE, LENGTH

DIMENSIONS OUT OF SPEC ARE DERIVED FROM A MIN/MAX CONDITION

ROUTING SHEET IDENTIFIED WITH NCR NO. AND DATE OF ISSUE: BY [signature] DATE: 2-7-97
JOB FOLDER

ORIGINATOR/INSPECTOR: [signature] DATE: 2-7-97

RESPONSIBILITY FOR NONCONFORMANCE

☐ VENDOR ☐ DESIGN ☐ MATERIAL ☐ CUTTING ☐ FORMING ☐ WELDING
☐ MACHINING ☒ INSPECTION ☐ CALIBRATION ☐ QC ☐ QA ☒ OTHER _____

TECHNICAL JUSTIFICATION/DESCRIPTION OF DISPOSITION

ITEM	TECHNICAL JUSTIFICATION	DESCRIPTION OF DISPOSITION
1-8	Submit to PSI for Tech. Justification	Use As Is
	& Written Disposition. [signature] 2-10-97	per G. Senecal, PSI
		See Attached FAX Copy MB

TECHNICAL JUSTIFICATION: BY — DATE: —

DISPOSITION: BY [signature] DATE: 2-27-97

DISPOSITION OF NONCONFORMANCE	RECOMMENDED DISPOSITION	
☐ ACCEPT AS IS ☒ USE AS IS	☒ ACCEPTED	10CFR21 EVALUATION REQUIRED: ☐ YES ☒ NO
☐ REPAIR /REWORK ☐ REJECT	☐ NOT ACCEPTED	CORRECTIVE ACTION REQUIRED: ☒ YES ☐ NO
CONDITIONAL RELEASE: CR NO. —		CUSTOMER APPROVAL REQUIRED: ☒ YES ☐ NO
		APPROVED BY: G. Senecal PSI MB DATE 2-27-97

APPROVAL OF DISPOSITION:		VERIFICATION OF DISPOSITION:	
VP-ENGINEERING [signature]	DATE 2-27-97	ACCEPTED BY [signature]	DATE 2-27-97
QA MANAGER [signature]	DATE 2/27/97	QA MANAGER [signature]	DATE 2/27/97
ANI —	DATE —	ANI —	DATE —

(1)

RANOR, INC

NONCONFORMANCE REPORT

FORM QA 12.1 REV. 1 (07/30/96)

NCR NUMBER: NCR- 1012 | PAGE 1 OF 2 | SKETCH ATTACHED ☐

JOB NUMBER	CUSTOMER	PURCHASE ORDER NUMBER	QUANTITY
7300 Flm	PSI	555822-00	1

PART DESCRIPTION	DOCUMENT NUMBER AND REVISION	SERIAL NUMBER
BSC OVERALL ASSY LIGO VAC	1049-4-101 REV-1	-02

CODE/SPECIFICATION: ☐ ASME SECTION III ☐ SAFETY RELATED ☐ ASME SECTION VIII ☐ MIL SPEC ☒ COMMERCIAL

DESCRIPTION OF NONCONFORMANCE

ITEM	REQUIREMENT	NONCONFORMANCE
1	48.44 ±0.045 ZONE B-8	48.370 48.392 -.025 -.003 OK
* 2	66.00 ±0.03 ZONE B-8 WHAT SIDE?	66.056 65.893 +.026 -.077 .009" UNC LIGO
3	⊥ | .075 | B | ZONE C-8	0.083 +.008 OK
4	// | .075 | C | ZONE C-8	0.126 +.051 OK
5	// | .030 | A | ZONE B-6	0.070 +.04 "B" ONLY
6	// | .030 | B | ZONE C-5	0.042 +.012

REMARKS: SEE INSP LOG FOR DIMENSION LOCATION IN REGARDS TO DEGREE LENGTH

DIMENSIONS OUT OF SPEC ARE DERIVED FROM A MIN/MAX CONDITION

ROUTING SHEET IDENTIFIED WITH NCR NO. AND DATE OF ISSUE: BY [signature] DATE: 2-7-97

JOE FOLDER

ORIGINATOR/INSPECTOR [signature] DATE: 2-7-97

RESPONSIBILITY FOR NONCONFORMANCE

☐ VENDOR ☐ MACHINING ☐ DESIGN ☒ INSPECTION ☐ MATERIAL ☐ CALIBRATION ☐ CUTTING ☐ QC ☐ FORMING ☐ QA ☐ WELDING ☒ OTHER _____

TECHNICAL JUSTIFICATION/DESCRIPTION OF DISPOSITION

ITEM	TECHNICAL JUSTIFICATION	DESCRIPTION OF DISPOSITION
1-8	Submit to PSI for Tech. Justification	USE ASIS
	& Written Disposition. [signature]	

TECHNICAL JUSTIFICATION: BY [signature] DATE: 2-27-97

DISPOSITION: BY Rick Bailey/KS DATE: 2-27-97

DISPOSITION OF NONCONFORMANCE: ☐ ACCEPT AS IS ☐ USE AS IS ☐ REPAIR/REWORK ☐ REJECT

CONDITIONAL RELEASE: CR NO. _____

RECOMMENDED DISPOSITION: ☐ ACCEPTED ☐ NOT ACCEPTED

10CFR21 EVALUATION REQUIRED: ☐ YES ☐ NO

CORRECTIVE ACTION REQUIRED: ☐ YES ☐ NO

CUSTOMER APPROVAL REQUIRED: ☐ YES ☐ NO

APPROVED BY _____ DATE _____

APPROVAL OF DISPOSITION:

VP ENGINEERING _____ DATE _____

QA MANAGER _____ DATE _____

ANI _____ DATE _____

VERIFICATION OF DISPOSITION:

ACCEPTED BY _____ DATE _____

QA MANAGER _____ DATE _____

ANI _____ DATE _____

* 66.056 at 0°
65.898 at 180°

(2)

RANOR, INC

NONCONFORMANCE REPORT

FORM QA 12.1 REV. 6 (07/30/96)

NCR NUMBER	PAGE 2 OF 2
NCR- 1012	SKETCH ATTACHED ☐

DESCRIPTION OF NONCONFORMANCE

ITEM	REQUIREMENT	NONCONFORMANCE
7	⊥ | .030 | A | ZONE C-5	0.05 +0.020 OK
8	// | .030 | C | ZONE D-7	0.059 +0.029

TECHNICAL JUSTIFICATION/DESCRIPTION OF DISPOSITION

ITEM	TECHNICAL JUSTIFICATION	DESCRIPTION OF DISPOSITION

(3)

S/N V0494003-02

Date

BSC
INSPECTION LOG

Sect "A-A"		Dimension	Actual @ 0	Actual @ 90	Actual @ 180	Actual @ 270	Tolerance	
1	Face to Face "D"	96.875"	96.813 to	96.842			.1"	
2			96.827 to	96.851				
3	Perpendicular to "A"		L /R	0.023	L /R	0.029	.075"	
4	Perpendicular to "C"		L /R	0.055	L /R	0.015	.075"	
5	Parrallel to "B"		L /R	0.023	L /R	0.031	.075"	
6	Center 60" to Face "D"	~~48.437"~~ 48.440	48.433 - 48.460 / 48.370 - 48.392	270° R.S. L.S.	48.428 - 48.451 / 48.399 - 48.413	90° R.S. L.S.	.045"	-.025, -.003*
7	Perpendicular to "A"		L /R	0.023	L /R	0.055	.076"	
8	Perpendicular to "C"		L /R	0.034	L /R	0.042	.075"	
9	Parrallel to "B"		L /R	0.041	L /R	0.043	.075"	
10	Center to Center "D"	66"	66.056	——	65.893	——	.030	+.024, -.077*
11	Parrallel to "A"		L /R	0.034	L /R	——	.075"	
12	Perpendicular to "B"	℄ to -B-	~~L /R ℄ to~~	0.059	L /R	——	.075"	
13	Parrallel to "C"		0.037	L /R		L /R	.075"	
14	Center 60" to Center "D"	33"	33.032 / 33.024	TOP BOTTOM	32.965 / 32.928	TOP BOTTOM	.075	
15	Parrallel to "A"		L /R	0.042	L /R	——	.075"	
16	Perpendicular to "B"	℄ to -B-	L /R	0.083	L /R	——	.075"	+.008*
17	Parrallel to "C"		~~0.126~~	L /R		L /R	.075"	+.051*

* NCR 1012

KJC 981 RANIER 1-28-97

S/N V0494003-02

Date

INSPECTION LOG

Elevation		Dimension	Actual @ 0	Actual @ 90	Actual @ 180	Actual @ 270	
View 18	Center 60" to Center "D"	44.50"	44.513	RIGHT SIDE	44.471	RIGHT SIDE Δ = 0.041	
	Diff. of "B" & "B"	0.07	44.517	LEFT SIDE	44.541	LEFT SIDE Δ = 0.024	
	Diff. of "C" & "C"	—					.075"
	Total Differance	0.07					
	RADIUS & CHECK →		30.22	30.225	30.25	30.21 TOTAL → (0.04)	
19	B's Parrallel to "A"		0.070				.030" +.04 *
20	C's Parrallel to "A"		0.018				.030"
21	5/8 Port 48 Deg to Rt.		> OK		> OK		
22	5/8 Port 48 Deg to Lf.			> OK		> OK	
Plan							
View 23	Face to Face 60"	113-3/4"	113.706	113.750			
							.1"
	"B" Nozzles		>		>		.030" +.012 *
24	Parrallel to"B"		> 0.042		>		.030" +.020 *
25	Perpendicular to "A"		> 0.050		>		.030"
26	Perpendicular to "C"		> 0.023	>	>	>	.1"
27	56-7/8" Left & Right		L 56.839		L 56.844		.1"
			R 56.872		R 56.881		
28	Face to Face 60"	113-3/4"	113.685	113.757			
	"C" Nozzles			>		>	.1"
29	Parrallel to"C"			> 0.059		>	.030" +.029 *
30	Perpendicular to "A"			> 0.038		>	.030"
31	Perpendicular to "B"		>	> 0.026	>	>	.030"
32	56-7/8" Left & Right			L 56.835		L 56.850	.1"
				R 56.868		R 56.894	.1"

(9)

S/N V0494003-02

Date

B5C
INSPECTION LOG

Annulus Port on 104.5" flange is @ 135 & 315 Deg							
Drawing V0494003							
	Support Leg Lug Dim.	26.48"	26.455	26.435	26.595	26.475	
		Dimension	Actual @ 0	Actual @ 90	Actual @ 180	Actual @ 270	
		60.5" Dia.	> BETWEEN 180° & 270°	> BETWEEN 270° & 0°	>	> 104.514	AVG Ø 104.471
		104.5" Dia.	> 104.405	> 104.539	> 104.428	> ~~104.431~~	

6

RANOR, INC Final Acceptance: By: KJC 661 RANOR Date: 1-8-97

BSC UNIT #2

DIMENSIONAL INSPECTION REPORT

FORM QA 9.1 REV. 3 (10/15/96)

Customer: PSI	Level No.:	Report No.: —
Part Description: BSC SHELL LOWER Pre MACH	P.O. No. 555822-00	Job No. 7300 F/M
Drawing No. & Rev. V049-4-003 REV-2	Serial No. UNIT#-2	Page 1 con't

Item No.	Drawing Dimension and Tolerances	Drawing Zone	Actual Dimension	Instrument Serial No.	Ref. / NCR Information	Sign Off
1	Ø61.37 +.00 -.03 NOTE //	B-5	61.365	V82QCI	0° D.P.	KJC 661 RANOR 1-6-97
2	Ø61.37 +.00 -.03		61.348	MATE TYP	90°	
3	Ø61.37 +.00 -.03		61.360		180°	
4	Ø61.37 +.00 -.03		61.355		270°	
5	Ø61.37 +.00 -.03	NOTE	SEE ABOVE	—		
6	↧ 9/16 TYP	//	9/16 TYP	SC06QCI-2		
7	55.87	C-3	55.873	HC-8 DI25589QCI		
8	▱ .015	A-8	w/0.01	MATE TYP	0°	
9	⊥ .015 A	A-8	0.01			
10	▱ .015	A-4	0.01		90°	
11	⊥ .015 A		0.01			
12	// .015 B		0.01			
13	▱ .015	A-6	0.01		180°	
14	// .015 B		0.01			
15	⊥ .015 A		0.01			
16	▱ .015	A-5	0.01		270°	
17	⊥ .015 A		0.01			
18	⊥ .015 B		0.01			
19	55.500 TYP 4x	B-8	55.500			
20	▱ .015	B-8	w/ 0.01			
21	// .015 A	B-8	0.01			
22	⊥ .015 B	B-8	0.01			
23	Ø14.06		14.05 14.06	HC-8 E.F.		
24	44.50	B-8	44.50	HC-8 DI25589QCI		
25	// .075 A TYP	D-8	0.02			
26	⊥ .075 B TYP	D-8	0.02			
27	33.0 TYP	D-8	33.0 TYP	HC-8 E.F.		

RANOR, INC

DIMENSIONAL INSPECTION REPORT

FORM QA 9.1 REV. 2 (4/1/96)

Customer: PROCESS SYSTEMS INTER.	Level No.: 1C	Report No.: N/A
Part Description: 104.12" I.D. FLANGE (BSC) GROOVED	P.O. No. 555822-00	S.O. No. 7300 F/M
Drawing No. & Rev. V049-4-022 REV- 4	Serial No. 7300-Z1	Sheet 1 con't 2 Rev.: —

Item No.	Drawing Dimension and Tolerances	Drawing Zone	Actual Dimension	Instrument Serial No.	Ref. / NCR Information	Sign Off
1	1.25 +0.13 −0.00	B-1	1.311-1.319	M12QCI		RRG 689 11-5-96 RANOR
2	125		95	PS01QCI		KJC 661 11-31-96 RANOR
3	63		46-55	PS01QCI		RRG 689 11-5-96 RANOR
4	⏥ |.015|		w/004	VC-3 DI25589QCI		10-31-96
5	1.00	B-3	1.001-1.010	M12QCI		RRG 689 11-5-96 RANOR
6	Ø 104.50	B-3	104.4958	IM40160QCI		RRG 689 11-5-96 RANOR
7	63	B-2	63 MAX	VISUAL		RRG 689 11-5-96 RANOR
8	Ø 105.63	B-2	105.653	IM40160QCI		KJC 661 11-31-96 RANOR
9	0.015 RAD		0.015	RG8QCI		10-31-96
10	0.060 RAD		0.06	RG8QCI		KJC 661 RANOR
11	Ø 106.38		106.386	DV12QCI		RRG 689 11-5-96 RANOR
12	Ø 107.75		107.752	DV12QCI		RRG 689 11-5-96 RANOR
13	↧ 0.38	B-1	0.378	VC-3 DI25589QCI		RRG 689 11-5-96 RANOR
14	0.03 RAD MAX	C-3	0.030	RG8QCI		RRG 689 11-5-96 RANOR
15	Ø 105.25	B-2	105.258	DV12QCI		RRG 689 11-5-96 RANOR
16	0.335-0.340	B-4	0.335	PG56QCI		RRG 689 11-5-96 RANOR
17	↧ 0.206-0.214		0.209	VC-3 DI25589QCI		RRG 689 11-5-96 RANOR
18	32 C ± 8 RMS		25	PS01QCI		RRG 689 11-5-96 RANOR
19	Ø 108.25	B-2	108.246	DV12QCI		RRG 689 11-5-96 RANOR
20	0.335-0.340	B-4	0.335	PG56QCI		RRG 689 11-5-96 RANOR
21	↧ 0.206-0.340		0.208	VC-3 DI25589QCI		RRG 689 11-5-96 RANOR
22	32 C ± 8 RMS		30	PS01QCI		RRG 689 11-5-96 RANOR
23	63 TYP		63 MAX	VISUAL		RRG 689 11-5-96 RANOR
24	R 0.020-0.035 TYP		0.030	RG8QCI		RRG 689 11-5-96 RANOR
25	75° TYP		75°	VP1QCI		RRG 689 11-5-96 RANOR
26	BREAK ALL EDGES (.005R)		OIC	VISUAL		KJC 661 RANOR

8

RANOR, INC

DIMENSIONAL INSPECTION REPORT

FORM QA 9.1 REV. 2 (4/1/96)

Customer: PROCESS SYSTEMS INTER	Level No.: 1C	Report No.: N/A
Part Description: 10 4 1/2 I.D. FLANGE (BSC) GROOVED	P.O. No. 555822-00	S.O. No. 7300 F/M
Drawing No. & Rev. V049-4-022 REV-4	Serial No. 7300-4 1	Sheet 2 con't Rev.: —

Item No.	Drawing Dimension and Tolerances	Drawing Zone	Actual Dimension	Instrument Serial No.	Ref. / NCR Information	Sign Off
27	63	B-4	63 MAX	VISUAL		RRG 689 11-5-96 RANOR
28	45° 8X	C-8	45°	DV12QCI		RRG 689 11-11-96 RANOR
29	0.25	D-4	0.245-0.251	DV12QCI		RRG 689 11-11-96 RANOR
30	0.50	D-4	0.490-0.503	DV12QCI		RRG 689 11-11-96 RANOR
31	BREAK EDGES (.005R)	D-3	OK	VISUAL		KJC 661 RANOR
32	↧ 0.146-0.156	C-4	0.146-0.150	PM69QCI		11-12-96
33	↧ 0.080-0.156	C-3	0.093-0.113	DM09QCI		RRG 689 11-11-96 RANOR
34	BREAK EDGES (.005R)	C-2	OK	VISUAL		KJC 661 RANOR
35	Ø 1.00 THRU 48X	D-5	0.095-1.00	DV12QCI		RRG 689 11-11-96 RANOR
36	110.25 B.C. CHORD	D-5	110.25	DV12QCI	⌖ w/0.027	RRG 689 11-11-96 RANOR
37	3.75°	D-6	3.75°	DV12QCI		RRG 689 11-11-96 RANOR
38	7.50° CHORD 7.210	D-6	7.50°	DV12QCI		RRG 689 11-11-96 RANOR
39	7.50° SECTION A-A	PER D.B. D-6	7.50	DV12QCI		RRG 689 11-11-96 RANOR
40	Ø 5/8 THRU 2X TYP	D-1	5/8	DV12QCI		RRG 689 11-11-96 RANOR
41	0.76 C'BORE		0.755	DV06QCI-2		KJC 661 RANOR
42	↧ 1/8		1/8	SC06QCI-2		KJC 661 RANOR
43	180°		180°	DV12QCI		RRG 689 11-11-96 RANOR
44	53.521 RAD		53.521 53.525	DV12QCI DV12QCI	AT 7.5° SECT A-A	RRG 689 11-11-96 RANOR
45	45°		45°	SC06QCI-2		KJC 661 RANOR
46	1/8"		7/64	SC06QCI-2		KJC 661 RANOR
47	SCRIBE & STAMP 0°	B-8	OK	VISUAL		11-12-96
48	37.5°	↓	37.5°	DV12QCI		11-12-96
49	ETCH S/N		OK	VISUAL		11-12-96

RANOR, INC

DIMENSIONAL INSPECTION REPORT

FORM QA 9.1 REV. 2 (4/1/96)

Customer: PROCESS SYSTEMS INTER	Level No.: 2C	Report No.: N/A
Part Description: 104 1/2" ID FLANGE (BSC) FLAT FACE	P.O. No. 555822-00	S.O. No. 7300 F/M
Drawing No. & Rev. V049-4-041 REV-2	Serial No. 7300-2	Sheet 1 con't Rev.: —

Item No.	Drawing Dimension and Tolerances	Drawing Zone	Actual Dimension	Instrument Serial No.	Ref. / NCR Information	Sign Off
1	1.00 +.13 −.00	D-1	1.075-1.049	DV062QCI		
2	125		90	PS01QCI		RRG 689 10-31-96 RANOR
3	32 C ± 8RMS		29-31	PS01QCI		RRG 689 10-31-96 RANOR
4	▱ | .015 |		W .003	VC-3 DI25589QCI		[illegible]
5	0.50	D-2	0.483-0.507	DV062QCI-2	NCR 7300-4	KJC 661 RANOR
6	0.06 RAD	D-2	0.06	RG1QCI		KJC 661 11-1-96 RANOR
7	1/8	C-3	7/32	SC012QCI-3		KJC 661 11-1-96 RANOR
8	45°	C-3	45°	SC012QCI-3		KJC 661 11-1-96 RANOR
9	Ø 105.13 +.06 −.00	D-3	105.169	IM40160QCI		RRG 689 10-31-96 RANOR
10	Ø 1.00 THRU 48X	D-5	0.997-1.006	DV12QCI		KJC 661 11-11-96 RANOR
11	110.250 B.C.	D-5	110.25	10228	CHORD 7.210	
12	3.75°	D-6	3.75°	10228		
13	7.50° (CHORD 7.2106)	D-6	7.5°	10228		
14	Ø 104.50 +.00 −.03 I.D.	C-7	104.483	IM40160QCI		RRG 689 10-31-96 RANOR
15	63		30	PS01QCI		RRG 689 10-31-96 RANOR
16	Ø 5/8 THRU 2X	C-2	0.627	DV12QCI		KJC 661 11-11-96 RANOR
17	0.76 C'BORE		0.765	DV12QCI		
18	↧ 1/8		1/8	DV12QCI		
19	53.531 RAD		53.531	DV12QCI		
20	45°	D-7	45°	DV12QCI		
21	180° APART	C-2	180°	DV12QCI		
22	Ø 112.50 O.D. REF	C-5	112 5/8	TAPE		
23	SCRIBE & STAMP 0°	B-1	OK	VISUAL		
24	SCRIBE S/N	—	OK	VISUAL		KJC 661 11-1-96 RANOR

RANOR, INC

DIMENSIONAL INSPECTION REPORT

FORM QA 9.1 REV. 2 (4/1/96)

Customer: PROCESS SYSTEMS INTER	Level No.: 1C	Report No.:
Part Description: 60 1/2" I.D. FLANGE (BSC) GROOVED	P.O. No. 555822-00	S.O. No. 7300 F/M
Drawing No. & Rev. V049-4-019 REV-3	Serial No. 7300-14	Sheet 1 con't 2 Rev.: —

Item No.	Drawing Dimension and Tolerances	Drawing Zone	Actual Dimension	Instrument Serial No.	Ref. / NCR Information	Sign Off
1	1.38 +.13 −.00	B-1	1.451-1.454	M12QCI		RRG 689 11-12-96 RANOR
2	125	B-1	125 MAX	VISUAL		RRG 689 11-5-96 RANOR
3	63	C-1	63 MAX	VISUAL		RRG 689 11-12-96 RANOR
4	⏥ | .010 |	C-1	w/0.003	VC-1		KJC 681 RANOR
5	1.00	C-3	0.994-0.997	M12QCI		RRG 689 11-12-96 RANOR
6	Ø 60.50 +.03 −.00	B-3	60.482	IM452A IM452BQCI		TYP
7	63	B-3	63 MAX	VISUAL		
8	Ø 61.40 +.03 −.00	B-3	61.413	IM452A IM452BQCI		RRG 689 11-5-96 RANOR
9	0.015 RAD	B-3	0.015	RG8QCI		KJC 681 RANOR
10	0.06 RAD	C-3	0.06	RG8QCI		RRG 689 11-12-96 RANOR
11	Ø 62.38	C-3	62.376	DV12QCI		TYP.
12	Ø 63.75	C-3	63.742	DV12QCI		
13	↧ 0.50	C-2	0.496	DM69QCI		
14	0.03 RAD MAX TYP	C-4	0.030	RG8QCI		
15	Ø 61.25	C-3	61.246	DV12QCI		
16	0.335 - 0.340	DETAIL-D B-4	0.335	PG52QCI		
17	0.206 - 0.214		0.207	DM69QCI		
18	32 √c ± 8RMS		24-29	PS01QCI		
19	Ø 64.25	C-2	64.252	DV12QCI		
20	0.335 - 0.340	DETAIL-D B-4	0.335	PG52QCI		
21	0.206 - 0.214		0.211	DM69QCI		
22	32 √c ± 8RMS		24-26	PS01QCI		
23	63		63 MAX	VISUAL		
24	RAD 0.020 0.035 TYP		0.030	RG8QCI		
25	75° TYP		75°	VP1QCI		
26	63 TYP		63 MAX	VISUAL		

RANOR, INC

DIMENSIONAL INSPECTION REPORT

FORM QA 9.1 REV. 2 (4/1/96)

Customer: PROCESS SYSTEM INTER	Level No.: 1C	Report No.: N/A
Part Description: 60 1/2 I.D. FLANGE (BSC) GROOVED	P.O. No. 555822-00	S.O. No. 7300F/M
Drawing No. & Rev. V049-4-019 REV-3	Serial No. 7300-14	Sheet 2 con't Rev.: —

Item No.	Drawing Dimension and Tolerances	Drawing Zone	Actual Dimension	Instrument Serial No.	Ref. / NCR Information	Sign Off
27	BREAK ALL EDGES (.005 R)	C-4	O.K.	VISUAL		BRG 689 11-12-96 RANOR
28	60° 6X DETAIL C	C-6	60°	DV12QC=		KJC 661 1-2-97 RANOR
29	0.25	D-5	0.247			
30	0.50	D-5	0.495			
31	BREAK ALL EDGES (.005 R)	D-3	OK	VISUAL		
32	↧ 0.146 - 0.156	C-5	0.150	DM06QC=		
33	↧ 0.080 - 0.156	C-3	0.139	DM06QC=		
34	BREAK ALL EDGES (.005 R)	C-3	OK	VISUAL		
35	Ø 1.00 30X	D-5	1.008	DV12QC=		
36	66.250 B.C.	D-5	66.25			
37	6.0°	D-6	6.0°			
38	12.0°	D-6	12.0°			
39	48°	D-7	48°			
40	Ø 5/8 THRU	D-2	0.626			
41	0.76 C'BORE		0.76			
42	↧ 1/8		1/8			
43	31.531 RAD		31.521	D		
44	45°		45°	SC06QC=2		
45	1/8"		1/8			
46	68.50 O.D. REF	C-2	68 1/2	TAPE		
47	SCRIBE & STAMP 0°	B-2	OK	VISUAL		
48	SCRIBE S/N.	—	O.K.	VISUAL		BRG 689 11-5-96 RANOR

RANOR, INC

DIMENSIONAL INSPECTION REPORT

FORM QA 9.1 REV. 2 (4/1/96)

Customer: PROCESS SYSTEMS INTER	Level No.: 1C	Report No.: N/A
Part Description: 60 1/2" I.D. FLANGE (BSC) GROOVED	P.O. No. 555822-00	S.O. No. 7300 F/M
Drawing No. & Rev. V049-4-019 REV-3	Serial No. 7300-15	Sheet 1 con't 2 Rev.: —

Item No.	Drawing Dimension and Tolerances	Drawing Zone	Actual Dimension	Instrument Serial No.	Ref. / NCR Information	Sign Off
1	1.38 +.13 −.00	B-1	1.450-1.452	M12QCI		RRG 689 11-12-96 RANOR
2	125	B-1	125 MAX	VISUAL		RRG 689 11-5-96 RANOR
3	63	C-1	63 MAX	VISUAL		RRG 689 11-12-96 RANOR
4	▱ | .010 |	C-1	w/003	VC-1		KJC 661 RANOR
5	1.00	C-3	1.000-1.002	M12QCI		RRG 689 11-12-96 RANOR
6	Ø 60.50 +.03 −.00	B-3	60.485	IM452A IM452BQCI		RRG 689 TYP. RANOR
7	63	B-3	63 MAX	VISUAL		RRG 689 RANOR
8	Ø 61.40 +.03 −.00	B-3	61.412	IM452A IM452BQCI		RRG 689 11-5-96 RANOR
9	0.015 RAD	B-3	0.015	RG8QCI		KJC 661 RANOR
10	0.06 RAD	C-3	0.06	RG8QCI		RRG 689 11-12-96 RANOR
11	Ø 62.38	C-3	62.379	DV12QCI		RRG 689 TYP. RANOR
12	Ø 63.75	C-3	63.747	DV12QCI		RRG 689 RANOR
13	⌶ 0.50	C-2	0.50	DM69QCI		RRG 689 RANOR
14	0.03 RAD MAX TYP	C-4	0.030	RG8QCI		RRG 689 RANOR
15	Ø 61.25	C-3	61.255	DV12QCI		RRG 689 RANOR
16	0.335 - 0.340	DETAIL-D B-4	0.335 -0.336	PGS2QCI		RRG 689 RANOR
17	0.206 - 0.214	↓	0.208	DM69QCI		RRG 689 RANOR
18	32 C ± 8RMS	↓	24	PS01QCI		RRG 689 RANOR
19	Ø 64.25	C-2	64.247	DV12QCI		RRG 689 RANOR
20	0.335 - 0.340	DETAIL-D B-4	0.335-0.336	PGS2QCI		RRG 689 RANOR
21	0.206 - 0.214	↓	0.208	DM69QCI		RRG 689 RANOR
22	32 C ± 8RMS	↓	26-29	PS01QCI		RRG 689 RANOR
23	63	↓	63 MAX	VISUAL		RRG 689 RANOR
24	RAD 0.020 0.035 TYP	↓	0.030	RG8QCI		RRG 689 RANOR
25	75° TYP	↓	75°	VP1QCT		RRG 689 RANOR
26	63 TYP	↓	63 MAX	VISUAL		RRG 689 RANOR

RANOR, INC

DIMENSIONAL INSPECTION REPORT

FORM QA 9.1 REV. 2 (4/1/96)

Customer: PROCESS SYSTEM INTER	Level No.: 1C	Report No.: N/A
Part Description: 60 1/2 I.D. FLANGE (BSC) GROOVED	P.O. No. 555822-00	S.O. No. 7300 F/M
Drawing No. & Rev. V049-4-019 REV-3	Serial No. 7300-15	Sheet 2 con't Rev.: —

Item No.	Drawing Dimension and Tolerances	Drawing Zone	Actual Dimension	Instrument Serial No.	Ref. / NCR Information	Sign Off
27	BREAK ALL EDGES (.005 R)	C-4	O.K.	VISUAL		RRG QIS RANOR 11-12-96
28	60° 6X DETAIL C	C-6	60°	DVI20CE		JCC QA1 RANOR 1-2-97
29	0.25	D-5	0.250	↓		
30	0.50	D-5	0.499	↓		
31	BREAK ALL EDGES (.005 R)	D-3	OK	VISUAL		
32	↧ 0.146 - 0.156	C-5	0.152	DMO9QCE		
33	↧ 0.080 - 0.156	C-3	0.120	↓		
34	BREAK ALL EDGES (.005 R)	C-3	OK	VISUAL		
35	Ø 1.00 30X	D-5	1.006	DVI20CE		
36	66.250 B.C.	D-5	66.25			
37	6.0°	D-6	6.0°			
38	12.0°	D-6	12.0°			
39	48°	D-7	48°			
40	Ø 5/8 THRU	D-2	0.634			
41	0.76 C'BORE	↓	0.76			
42	↧ 1/8	↓	1/8			
43	31.531 RAD	↓	31.51	↓		
44	45°	↓	45°	SC06QCE-2		
45	1/8"	↓	1/8	↓		
46	68.50 O.D. REF	C-2	68 1/2	TAPE		
47	SCRIBED STAMP 0°	B-2	OK	VISUAL		
48	SCRIBE S/N.	—	O.K.	VISUAL		RRG QIS RANOR 11-5-96

RANOR, INC

DIMENSIONAL INSPECTION REPORT

FORM QA 9.1 REV. 2 (4/1/96)

Customer: PROCESS SYSTEMS INTER	Level No.: 1C	Report No.: N | A
Part Description: 60 1/2" I.D. FLANGE (BSC) GROOVED	P.O. No. 555822-00	S.O. No. 7500 F/M
Drawing No. & Rev. V049-4-019 REV-3	Serial No. 7300-10	Sheet 1 con't 2 Rev.: —

Item No.	Drawing Dimension and Tolerances	Drawing Zone	Actual Dimension	Instrument Serial No.	Ref. / NCR Information	Sign Off
1	1.38 +.13 −.00	B-1	1.452-1.453	DV12QC=		KJC 661 1-6-97 RANOR
2	125	B-1	78	PS01QC=		11-5-96
3	63	C-1	63 MAX	VISUAL		KJC 661 1-6-97 RANOR
4	⏥ | .010 |	C-1	0.003	VC-1		
5	1.00	C-3	0.999-1.00	DV12QC=		
6	Ø 60.50 +.03 −.00	B-3	60.487	DM06QC=		
7	63	B-3	63 MAX	VISUAL		
8	Ø 61.40 +.03 −.00	B-3	61.410	IM45QC=		11-5-96
9	0.015 RAD	B-3	0.015	RG8QC=		KJC 661 1-6-97 RANOR
10	0.06 RAD	C-3	0.06	↓		
11	Ø 62.38	C-3	62.374	DV12QC=		
12	Ø 63.75	C-3	63.74	↓		
13	↧ 0.50	C-2	0.500	DM06QC=		
14	0.03 RAD MAX TYP	C-4	0.02	RG8QC=		
15	Ø 61.25	C-3	61.246	DV12QC=		
16	0.335 - 0.340	DETAIL-D B-4	OK TO GAGE	PG52QC=		
17	0.206 - 0.214	↓	0.207	DM06QC=		
18	32 C ± 8RMS	↓	27.-34	PS01QC=		
19	Ø 64.25	C-2	64.25	DV12QC=		
20	0.335 - 0.340	DETAIL-D B-4	OK TO GAGE	PG52QC=		
21	0.206 - 0.214	↓	0.206	DM06QC=		
22	32 C ± 8RMS	↓	31-38	PS01QC=		
23	63	↓	63 MAX	VISUAL		
24	RAD 0.020 0.035 TYP	↓	0.02	RG8QC=		
25	75° TYP	↓	75°	VP1QC=		
26	63 TYP	↓	63 MAX	VISUAL		

15

RANOR, INC

DIMENSIONAL INSPECTION REPORT

FORM QA 9.1 REV. 2 (4/1/96)

Customer: PROCESS SYSTEM INTER	Level No.: 1C	Report No.:
Part Description: 60 1/2 I.D. FLANGE (BSC) GROOVED	P.O. No. 555822-00	S.O. No. 7300 F/M
Drawing No. & Rev. V049-4-019 REV-3	Serial No. 7300-10	Sheet 2 con't Rev.: —

Item No.	Drawing Dimension and Tolerances	Drawing Zone	Actual Dimension	Instrument Serial No.	Ref. / NCR Information	Sign Off
27	BREAK ALL EDGES (.005 R)	C-4	OK	VISUAL		KJC 6/11-6-97 RANOR
28	60° 6X DETAIL C	C-6	60°	DVI2QC		
29	0.25	D-5	0.246			
30	0.50	D-5	0.493			
31	BREAK ALL EDGES (.005 R)	D-3	OK	VISUAL		
32	⊥ 0.146 - 0.156	C-5	0.151	DM06QC		
33	⊥ 0.080 - 0.156	C-3	0.123			
34	BREAK ALL EDGES (.005 R)	C-3	OK	VISUAL		
35	Ø 1.00 30X	D-5	1.007	DVI2QC		
36	66.250 B.C.	D-5	66.25			
37	6.0°	D-6	6.0°			
38	12.0°	D-6	12.0°			
39	48°	D-7	48°			
40	Ø 5/8 THRU	D-2	0.626			
41	0.76 C'BORE		0.76			
42	⊥ 1/8		1/8			
43	31.531 RAD		31.530			
44	45°		45°			
45	1/8"		1/8"			
46	68.50 O.D. REF	C-2	68 1/2	TAPE		
47	SCRIBE & STAMP 0°	B-2	OK	VISUAL		
48	SCRIBE S/N.	—	OK	VISUAL		11-5-96

RANOR, INC

DIMENSIONAL INSPECTION REPORT

FORM QA 9.1 REV. 2 (4/1/96)

Customer: PROCESS SYSTEMS INTER	Level No.: 1C	Report No.: N/A
Part Description: 60 1/2" I.D. FLANGE (BSC) GROOVED	P.O. No. S55822-00	S.O. No. 7300 F/M
Drawing No. & Rev. V049-4-019 REV-3	Serial No. 7300-9	Sheet 1 con't 2 Rev.: —

Item No.	Drawing Dimension and Tolerances	Drawing Zone	Actual Dimension	Instrument Serial No.	Ref. / NCR Information	Sign Off
1	1.38 +.13 −.00	B-1	1.451-1.454	M12QCI		RRG 699 11-14-96 RANOR
2	125	B-1	125 MAX	VISUAL		RRG 699 11-4-96 RANOR
3	63	C-1	36	PSO1QCI		RRG 699 11-14-96 RANOR
4	▱ | .010 |	C-1	w/ 0.003	VC-1		KJC 661 RANOR
5	1.00	C-3	0.994-0.998	M12QCI		RRG 699 11-14-96 RANOR
6	Ø 60.50 +.03 −.00	B-3	60.487	IM452A IM452BQCI		TYP.
7	63	B-3	63 MAX	VISUAL		
8	Ø 61.40 +.03 −.00	B-3	61.416	IM452A IM452BQCI		RRG 699 11-4-96 RANOR
9	0.015 RAD	B-3	0.015	RG8QCI		KJC 661 RANOR
10	0.06 RAD	C-3	0.06	RG8QCI		RRG 699 11-14-96 RANOR
11	Ø 62.38	C-3	62.390	DV12QCI		TYP.
12	Ø 63.75	C-3	63.752	DV12QCI		
13	⌶ 0.50	C-2	0.500	DM06QCI		
14	0.03 RAD MAX TYP	C-4	0.03	RG8QCI		
15	Ø 61.25	C-3	61.255	DV12QCI		
16	0.335 - 0.340	DETAIL-D B-4	0.336	PGS2QCI		
17	0.206 - 0.214		0.208	DM06QCI		
18	32 C ± 8RMS		31	PSO1QCI		
19	Ø 64.25	C-2	64.253	DV12QCI		
20	0.335 - 0.340	DETAIL-D B-4	0.338	PGS2QCI		
21	0.206 - 0.214		0.210	DM06QCI		
22	32 C ± 8RMS		31	PSO1QCI		
23	63		63 MAX	VISUAL		
24	RAD 0.020 0.035 TYP		0.030	RG8QCI		
25	75° TYP		75°	VP1QCI		
26	63 TYP		63 MAX	VISUAL		

RANOR, INC

DIMENSIONAL INSPECTION REPORT

FORM QA 9.1 REV. 2 (4/1/96)

Customer: PROCESS SYSTEM INTER	Level No.: 1C	Report No.: N/A
Part Description: 60 1/2 I.D. FLANGE (BSC) GROOVED	P.O. No. 555822-00	S.O. No. 7300 F/M
Drawing No. & Rev. V049-4-019 REV-3	Serial No. 7300-9	Sheet 2 con't Rev.: —

Item No.	Drawing Dimension and Tolerances	Drawing Zone	Actual Dimension	Instrument Serial No.	Ref. / NCR Information	Sign Off
27	BREAK ALL EDGES (.005 R)	C-4	OK	VISUAL		KJC 661 RANOR 1-6-97
28	60° 6X DETAIL C	C-6	60°	DV12QCI		
29	0.25	D-5	0.25			
30	0.50	D-5	0.499			
31	BREAK ALL EDGES (.005 R)	D-3	OK	VISUAL		
32	↧ 0.146 - 0.156	C-5	0.146	DM06QCI		
33	↧ 0.080 - 0.156	C-3	0.123	DM06QCI		
34	BREAK ALL EDGES (.005 R)	C-3	OK	VISUAL		
35	Ø 1.00 30X	D-5	1.008	DV12QCI		
36	66.250 B.C.	D-5	66.25			
37	6.0°	D-6	6.0°			
38	12.0°	D-6	12.0°			
39	48°	D-7	48°			
40	Ø 5/8 THRU	D-2	0.627			
41	0.76 C'BORE		0.758			
42	↧ 1/8		1/8			
43	31.531 RAD		31.525			
44	45°		45°	SC06QCI-2		
45	1/8"		1/8			
46	68.50 O.D. REF	C-2	68 1/2	TAPE		
47	SCRIBE & STAMP 0°	B-2	OK	VISUAL		
48	SCRIBE S/N.	—	O.K.	VISUAL		RRG 689 RANOR 11-4-96

7300 5/1

RAMOR, INC LEV 1E BILL OF MATERIAL

FORM QA 4.1
REV. 1 (6/22/90)

DUE DATE AS NOTED ON P.O.

CUSTOMER PROCESS SYS. INT DRAWING NO. V049-4-001 UNITS REQUIRED 20 SHEET 1 OF 1

JOB NO 7300FM PART DESCRIPTION 60" PORTS PREPARED BY DRB Q.C. APPROVAL

ITEM NO.	QUANTITY	MATERIAL SPECIFICATION	THICKNESS	SIZE	LEV	SKETCH	SHEAR	SAW	THERMAL CUTTING	BEVEL	PRE-MACH.	FORM	COMMENTS	MATERIAL S-P-C	HEAT NUMBER
12	4/20	304L SS	1/2"	27 11/16 X 191.69		7			DNC ✓	—	—	—	6 pcs	C	39734-1A
															[redacted]
															[redacted]
									✓				7 pcs CUT		39734-4A
									✓				7 pcs. CUT		39734-5A
				RECORD ALL									1 PC. EXTRA		39734-1A
				PLATE HEAT #'S									TEMP C.T		
(61)															

RANOR, INC. SERIAL NO. _____

WELD MAP/WELD JOINT IDENTIFICATION SHEET

WELD MAP PAGE	CUSTOMER	CUST P.O.	JOB NO.	LEVEL NO.
1A CON'T 1B	PROCESS SYS. INT.		7300FM	1E

DESCRIPTION	MATERIAL
LIGO VACUMM CHAMBER DWG. No. V049-4-003 60" NOZZLES	T 304L SA 240

WELDING PROCESS: PAW GTAW

WELD PROCEDURES	G1	P-P8-P8-2 REV.0	T1	T-P8-P8-PSI REV.0	F1		M1		S1		
	G2		T2		F2		M2		S2		
	G3		T3		F3		M3		S3		
FILLER METAL											

PREPARED BY:	APPROVED BY:	W/M REV.
D.R.B. 9-16-96	N/A	-

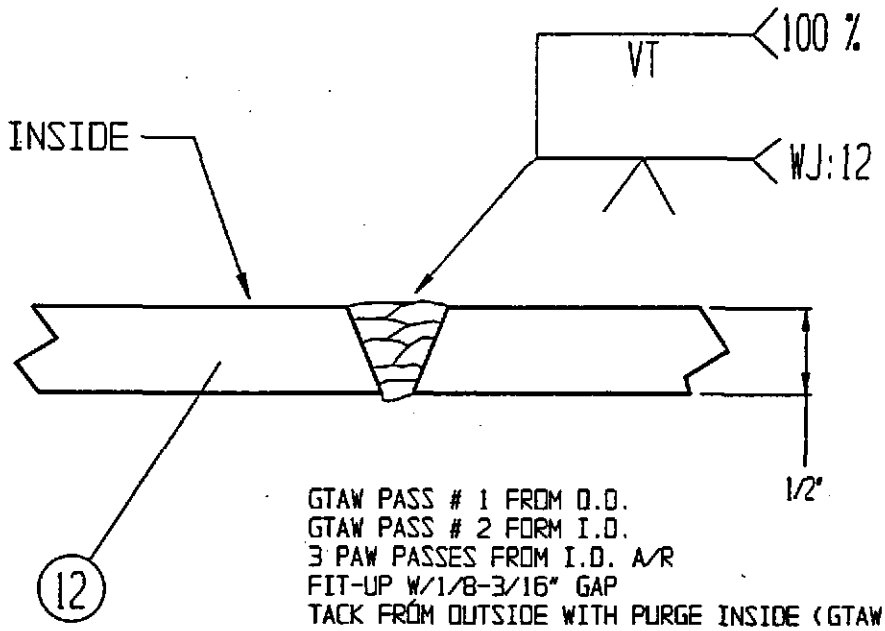

GTAW PASS # 1 FROM O.D.
GTAW PASS # 2 FORM I.D.
3 PAW PASSES FROM I.D. A/R
FIT-UP W/1/8-3/16" GAP
TACK FROM OUTSIDE WITH PURGE INSIDE (GTAW)
ONE INCH TACKS ON TEN IN. CENTERS
BACKSTEP WELD ROOT PASS FROM TACK TO TACK FROM OUTSIDE (TIG)
GTAW PASS FROM INSIDE (TIG)
FILL FROM I.D. A/R (PAW)

ASSEMBLY NUMBER	LOCATION NUMBER	WELD JOINT	TACKING RECORD			WELD JOINT RECORD			REPAIR RECORD		
			WELDER I.D.	FILLER METAL HEAT/LOT NO.	PROC.	WELDER I.D.	FILLER METAL HEAT/LOT NO.	PROC.	REPAIR WELDER	WELD REPAIR FILLER MET.	PROC.
1	1	WJ: 12	P	5705643	T1	P-W	5705643	P1 T1			
2	1	WJ: 12	W	5705643	T1	W	52046-46	P1 T1			
3	1	WJ: 12	P	AT6641	T1	W	52046-46	P1 T1			
4	1	WJ: 12	P	AT6641	T1	W	52046-46	P1 T1			
5	1	WJ: 12	W W	AT6641	T1	W	52046-46	P1 T1			
6	1	WJ: 12	W W	AT6641	T1	R R	CT6824	G1 T1			
7	1	WJ: 12	P	AT6641	T1	R R	CT6824	G1 T1			
8	1	WJ: 12	P	AT6641	T1	R R	CT6824	G1 T1			

RANOR, INC. SERIAL NO. _____

WELD MAP/WELD JOINT IDENTIFICATION SHEET

WELD MAP PAGE	CUSTOMER	CUST P.O.	JOB NO.	LEVEL NO.
1B CON'T 2	PROCESS SYSTEMS	555822-00	7300 F/M	1E

DESCRIPTION: 60" NOZZLES
DWG. No. V049-4-003

MATERIAL: 304L S/S

WELDING PROCESS: ~~GMAW~~ GTAW | GTAW | FCAW | SMAW | SAW

WELD PROCEDURES	G1	P-P8-P8-2 Rev.0	T1	~~P-P8-P8-2 REV.0~~	F1		M1		S1		
	G2		T2	T-P8-P8-PSI REV.0	F2		M2		S2		
	G3		T3		F3		M3		S3		
FILLER METAL											

PREPARED BY: DJH 9-16-96 | APPROVED BY: N/A | W/M REV. –

ASSEMBLY NUMBER	LOCATION NUMBER	WELD JOINT	TACKING RECORD			WELD JOINT RECORD			REPAIR RECORD		
			WELDER I.D.	FILLER METAL HEAT/LOT NO.	PROC.	WELDER I.D.	FILLER METAL HEAT/LOT NO.	PROC.	REPAIR WELDER	WELD REPAIR FILLER MET.	PROC.
9	1	WJ:12	P	AT6641	T2	RR	CT6824	G1 T1			
10	1	WJ:12	P	AT6641	T2	RR	CT6824	G1 T1			
11	1	WJ:12	P	AT6641	T2	RR	CT6824	G1 T1			
12	1	WJ:12	P	AT6641	T2	RR	CT6824	G1 T1			
13	1	WJ:12	P	AT6641	T2	RR	CT6824	G1 T1			
14	1	WJ:12	P	AT6641	T2	RR	CT6824	G1 T1			
15	1	WJ:12	W	AT6641	T2	RR	CT6824	G1 T1			
16	1	WJ:12	P	AT6834	T2	K227B	S437221	T1 T2			
17	1	WJ:12	P	AT6834	T2	K227B	S437221	T1 T2			
18	1	WJ:12	P	AT6834	T2	K227B	S437221	T1 T2			
19	1	WJ:12	P	AT6834		K227B	S437221	T1 T2			
20	1	WJ:12	P	AT6834		K227B	S437221	T1 T2			

7300 F/M

RANOR, INC — **BILL OF MATERIAL** FORM QA 4.1 REV. 1 (6/22/90) — DUE DATE AS NOTED ON P.O.

CUSTOMER PROCESS SYSTEMS — DRAWING NO. V049-4-003 — UNITS REQUIRED 5 sets — SHEET 1 OF 1

JOB NO. 7300 FM — PART DESCRIPTION LOWER SHELL MISC. PARTS — PREPARED BY DJH 9-19-96 — Q.C. APPROVAL

LEVEL # 1C

ITEM NO.	QUANTITY	MATERIAL SPECIFICATION	THICKNESS	SIZE	LEV	SKETCH	SHEAR	SAW	THERMAL CUTTING	BEVEL	PRE-MACH.	FORM	COMMENTS	MATERIAL S-P-C	HEAT NUMBER
5	5	304L	1½	112½ O.D. X 104¼ I.D. FORG.							DWG		DWG. NO. V049-4-022	C	
7	20	304L	1⅝	68½ O.D. X 60 I.D. FORG.							DWG		DWG. NO V049-4-019		
15	15	304L	BAR	3/8 x 4 F.B. x 144 RANDOM.		#1		—		—		F/O	FARMOUT ROLLING		
16	40	304L	3/4	3⅞ x 24					[illegible]				CUT FROM 20"x36" PL		Y1126
20	20	304L	½	12 x 12 ~~10~~ 12 PCS CUT		#2			[illegible]		—	—	CUT FROM 59½Ø DROPS		96985-1B 10 pcs 4631-2A — 10 pcs CV
21A	60	304L	BAR	3/8 x 1½ F.B. X 8		#3		—		—	—				
21B	60	304L	BAR	3/8 x 1½ F.B. X 14		#4		—		—	—				
22	20	304L	BAR	¼ x 2½ F.B. x 4		#5		—		—	—				
51	10	304L	BAR	½ x 2 F.B. X 144 RANDOM		#6		—				F/O	FARM OUT ROLLING		
52	90	304L	BAR	3/8 x 2 F.B. x 2¼		#7	—			—					
55	40	304L	½	6½ x 8 ° 39 CUT					[illegible]				CUT FROM 59½Ø DROPS	C	
				(THIS PART IS FLAT)									10 PCS.		39734-1A
													12 PCS.		39734-4A
													12 PCS.		39734-5A
													8 PCS		47804-5A

RANOR, INC

SERIAL NO. 2

WELD MAP/WELD JOINT IDENTIFICATION SHEET

WELD MAP PAGE	CUSTOMER	CUST P.O.	JOB NO.	LEVEL NO.
1 CON'T 2	PROCESS SYSTEMS	555822-00	7300 F/M	1C

DESCRIPTION SUPPORT PAD SUBASSEMBLY
DWG. No. V049-4-003

MATERIAL 304L S/S

WELDING PROCESS:	GMAW		GTAW		FCAW		SMAW		SAW	
WELD PROCEDURES	G1		T1	P-P8-P8-2 REV.0	F1		M1		S1	
	G2		T2	T-P8-P8-PSI REV.0	F2		M2		S2	
	G3		T3		F3		M3		S3	
FILLER METAL										

PREPARED BY: DJH 9-16-96

APPROVED BY:

W/M REV. _

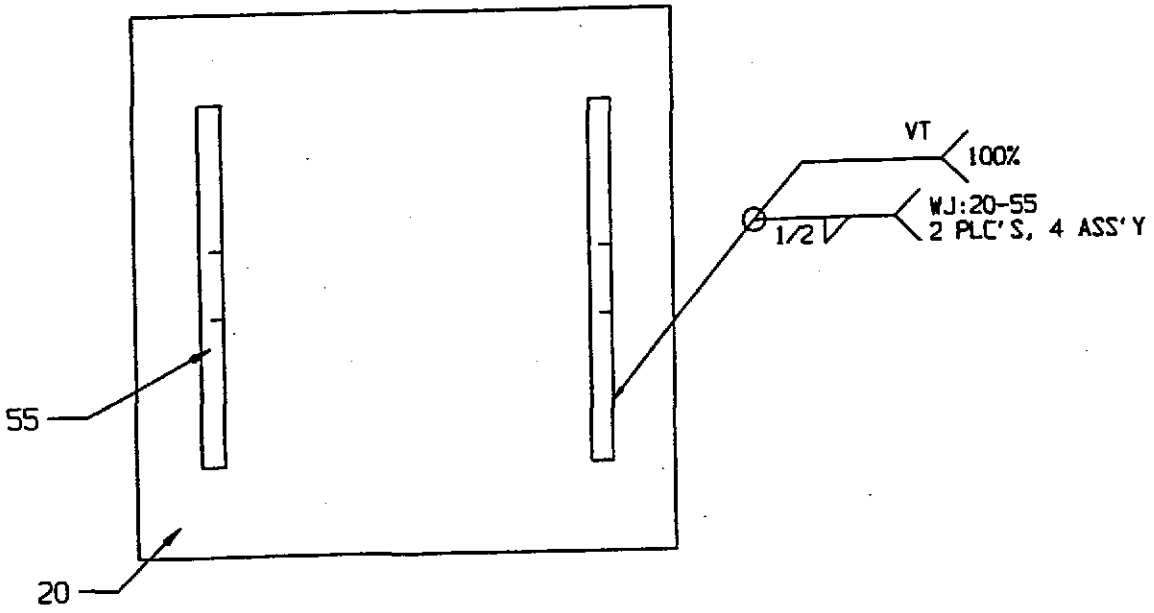

ASSEMBLY NUMBER	LOCATION NUMBER	WELD JOINT	TACKING RECORD			WELD JOINT RECORD			REPAIR RECORD		
			WELDER I.D.	FILLER METAL HEAT/LOT NO.	PROC.	WELDER I.D.	FILLER METAL HEAT/LOT NO.	PROC.	REPAIR WELDER	WELD REPAIR FILLER MET.	PROC.
1	1	20-55	O	AT6834	T2	P	AT6834	T1			
1	2	20-55	O	AT6834	T2	P	AT6834	T1			
2	1	20-55	O	AT6834	T2	P	AT6834	T1			
2	2	20-55	O	AT6834	T2	P	AT6834	T1			
3	1	20-55	O	AT6834	T2	W	AT6834	T2-T1			
3	2	20-55	O	AT6834	T2	W	AT6834	T2-T1			
4	1	20-55	O	AT6834	T2	W	AT6834	T2-T1			
4	2	20-55	O	AT6834	T2	W	AT6834	T2-T1			

RANOR, INC

Ser. # 2.

INSPECTION/NONDESTRUCTIVE EXAMINATION RECORD

WELD MAP	CUSTOMER:	CUSTOMER PO:	JOB NO.:	LEVEL NO.:
2 CONT. –	PROCESS SYSTEMS INT.	555822-00	7300 F/M	1C

DESCRIPTION:	MATERIAL:
SUPPORT PAD SUBASSEMBLY; DWG NO. V049-4-003	304L S/S

PREPARED BY	APPROVED BY:	WELD MAP REV.:
DJH 6-18-96		—

VISUAL EXAMINATION REPORT - PROCEDURE NO. RQCP-25, REV. 4

AREA EXAMINED:
☐ ROOT
☒ FINAL
☐ BEVELED EDGES

SURFACE CONDITION:
☒ AS-WELDED
☐ GROUND
☐ MACHINED

	WELD JOINT NUMBER	WJ:20-55 ASS'Y 1	WJ:20-55 ASS'Y 2	WJ:20-55 ASS'Y 3	WJ:20-55 ASS'Y 4
	NDE EXAMINER LEVEL DATE	MB II 2-5-97	MB II 2.5.97	MB II 2.5.97	MB II 2.5.97
	CUSTOMER QUALITY REP. DATE				
Cracks		None	None	None	None
Fusion		OK	OK	OK	OK
Crater Filled to Full Cross-section of Weld		—	—	—	—
Weld Profile		OK	OK	OK	OK
Undercut		None	None	None	None
Piping Porosity		None	None	None	None
Fillet Weld Size		OK	OK	OK	OK
Visual Indications After Repair		—	—	—	—
Final Weld Joint Acceptance		Accept	Accept	Accept	Accept

VISUAL EXAMINATION REPORT - PROCEDURE NO. RQCP-25, REV. 4

AREA EXAMINED:
☐ ROOT
☐ FINAL
☐ BEVELED EDGES

SURFACE CONDITION:
☐ AS-WELDED
☐ GROUND
☐ MACHINED

	WELD JOINT NUMBER									
	NDE EXAMINER LEVEL DATE									
	CUSTOMER QUALITY REP. DATE									
Cracks										
Fusion										
Crater Filled to Full Cross-section of Weld										
Weld Profile										
Undercut										
Piping Porosity										
Fillet Weld Size										
Visual Indications After Repair										
Final Weld Joint Acceptance										

NDE Examiner: [signature] Level: II Date: 2-5-97

7300Flm

RALOR, INC

BILL OF MATERIAL

FORM QA 4.1
REV. 1 (6/22/90)

DUE DATE _____

CUSTOMER Process Systems DRAWING NO. V049-4-003 UNITS REQUIRED SHEET 1 OF 1

JOB NO 7300FM PART DESCRIPTION Lower Shell Assy. PREPARED BY DJH 9-20-96 Q.C. APPROVAL _____

ITEM NO.	QUANTITY	MATERIAL SPECIFICATION	THICKNESS	LEVEL # 1 SIZE	LEV	SKETCH	SHEAR	SAW	THERMAL CUTTING	BEVEL	PRE-MACH.	FORM	RECORD SERIAL #'S COMMENTS	MATERIAL S-P-C	HEAT NUMBER
3	1	304LS/S		Bottom Shell	1A										96985-1B
1	1	304LS/S		Bottom Head	1B								#1		10985-2B
		304LS/S		Misc. Ass'y. Parts	1C										
9	6	304LS/S		"E-Ports" Flange Ass'y.	1D										
10	6			"F-Ports" Flange Ass'y.	1D										
11	12			"G-Ports" Flange Ass'y.	1D										
12	4			60" Ports	1E										
13	4			"D-Ports" Flange Ass'y.	1D										
(28)															

RANOR, INC · SERIAL NO. 2

WELD MAP/WELD JOINT IDENTIFICATION SHEET

WELD MAP PAGE	CUSTOMER	CUST P.O.	JOB NO.	LEVEL NO.
1 CON'T 2	PROCESS SYSTEMS	555822-00	7300 F/M	1

DESCRIPTION: LOWER SHELL SUBASSEMBLY
DWG. No. V049-4-003

MATERIAL: 304L S/S

WELDING PROCESS:	GMAW	GTAW	FCAW	SMAW	SAW
WELD PROCEDURES G1		T1 P-P8-P8-2 REV.0	F1	M1	S1
G2		T2 T-P8-P8-PSI REV.0	F2	M2	S2
G3		T3	F3	M3	S3
FILLER METAL					

PREPARED BY:	APPROVED BY:	W/M REV.
DJH 9-16-96		A 10-3-96

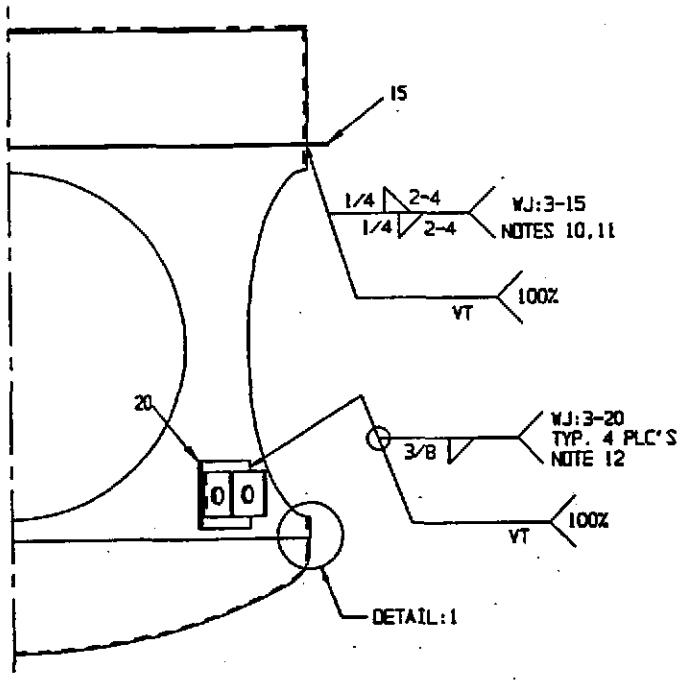

WELDING NOTES:
1. GTAW PASS #1 FROM THE O.D.
2. GTAW PASS #2 FROM THE I.D.
3. PAW PASSES FROM THE I.D. AS REQUIRED.
4. FIT-UP WITH 1/8 TO 3/16 GAP
5. TACK FROM OUTSIDE WITH PURGE INSIDE (GTAW)
6. ONE INCH TACKS ON TEN INCH CENTERS.
7. BACKSTEP WELD ROOT PASS FROM TACK TO TACK FROM OUTSIDE (TIG)
8. GTAW PASS FROM INSIDE (TIG)
9. FILL FROM I.D. AS REQUIRED (PAW)
10. TACK BOTH SIDES (PAW)
11. WELD BOTH SIDES ALTERNATING; END WELDS ON TACKS (PAW)
12. PAW WELD AS REQUIRED.

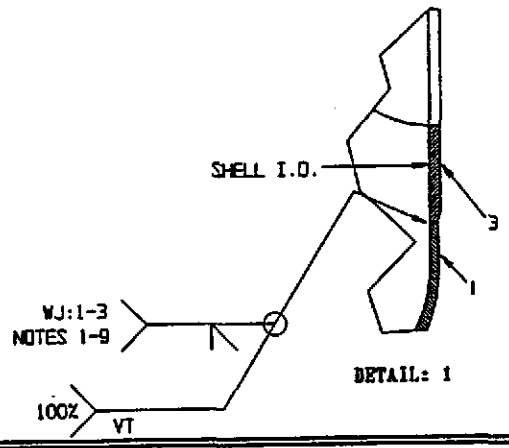

DETAIL: 1

ASSEMBLY NUMBER	LOCATION NUMBER	WELD JOINT	TACKING RECORD: WELDER I.D.	TACKING RECORD: FILLER METAL HEAT/LOT NO.	TACKING RECORD: PROC.	WELD JOINT RECORD: WELDER I.D.	WELD JOINT RECORD: FILLER METAL HEAT/LOT NO.	WELD JOINT RECORD: PROC.	REPAIR RECORD: REPAIR WELDER	REPAIR RECORD: WELD REPAIR FILLER MET.	REPAIR RECORD: PROC.
1	1	3-20	P	AT6641	T2	P/W	5710840	T1			
1	2	3-20	P	AT6641	T2	P/W	5710840	T1			
1	3	3-20	P	AT6641	T2	P/W	5710840	T1			
1	4	3-20	P	AT6641	T2	P/W	5710840	T1			
1	1	1-3	P	AT6641	T-2	RR	CT6824	T-2			
1	1	3-15	LL	AT6628	T-2	W/P	5710840	T-2			
		1-3	—	—	—	W	52046-46	T-2			
		3-15	—	—	—	LL	AT6628 5710840	T1			

RANOR, INC · SERIAL NO. 2

WELD MAP/WELD JOINT IDENTIFICATION SHEET

WELD MAP PAGE	CUSTOMER	CUST P.O.	JOB NO.	LEVEL NO.
2 CON'T 3	PROCESS SYSTEMS	555822-00	7300 F/M	1

DESCRIPTION: LOWER SHELL SUBASSEMBLY
DWG. No. V049-4-003

MATERIAL: 304L S/S

WELDING PROCESS:	GMAW	GTAW	FCAW	SMAW	SAW
WELD PROCEDURES	G1	T1 P-P8-P8-2 REV.0	F1	M1	S1
	G2	T2 T-P8-P8-PSI REV.0	F2	M2	S2
	G3	T3	F3	M3	S3
FILLER METAL					

PREPARED BY: DJH 9-16-96 | APPROVED BY: | W/M REV. -

WELDING NOTES:
1. GTAW TACK OUTSIDE
2. GTAW WELD INSIDE
3. PAW STICH WELD OUTSIDE AS REQUIRED.

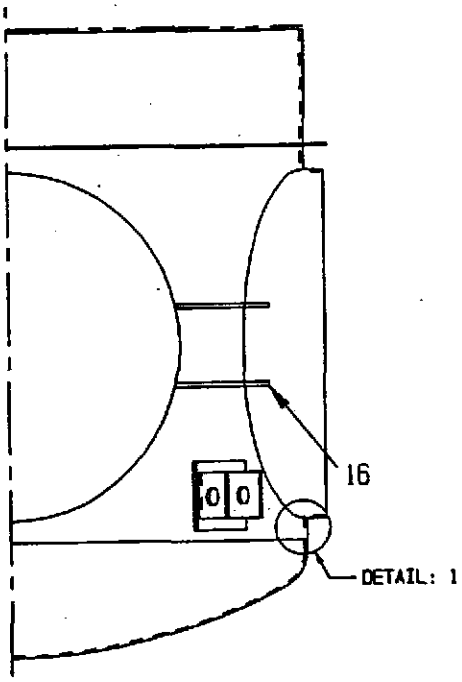

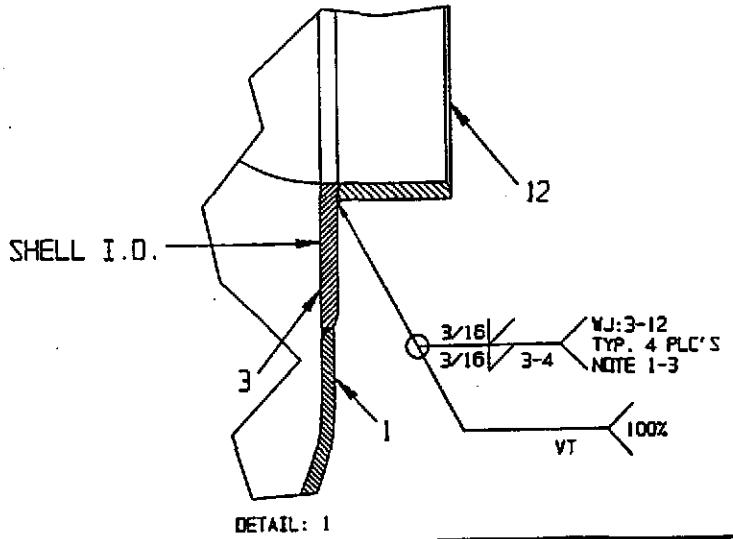

DETAIL: 1

ASSEMBLY NUMBER	LOCATION NUMBER	WELD JOINT	TACKING RECORD: WELDER I.D.	TACKING RECORD: FILLER METAL HEAT/LOT NO.	TACKING RECORD: PROC.	WELD JOINT RECORD: WELDER I.D.	WELD JOINT RECORD: FILLER METAL HEAT/LOT NO.	WELD JOINT RECORD: PROC.	REPAIR RECORD: REPAIR WELDER	REPAIR RECORD: WELD REPAIR FILLER MET.	REPAIR RECORD: PROC.
1	1	3-12	00	AT6028	T2	LL/W/P	S2046-46	T1			
1	2	3-12	00	AT6028	T2	LL/W/P	S2046-46	T1			
1	3	3-12	00	AT6028	T2	LL/W/P	S2046-46	T1			
1	4	3-12	00	AT6028	T2	LL/W/P	S2046-46	T1			

RANOR, INC · SERIAL NO. 2

WELD MAP/WELD JOINT IDENTIFICATION SHEET

WELD MAP PAGE	CUSTOMER	CUST P.O.	JOB NO.	LEVEL NO.
3 CON'T 4	PROCESS SYSTEMS	555822-00	7300 F/M	1

DESCRIPTION	MATERIAL
LOWER SHELL SUBASSEMBLY DWG. No. V049-4-003	304L S/S

WELDING PROCESS:	GMAW		GTAW		FCAW		SMAW		SAW	
WELD PROCEDURES	G1		T1	P-P8-P8-2 REV.0	F1		M1		S1	
	G2		T2	T-P8-P8-PSI REV.0	F2		M2		S2	
	G3		T3		F3		M3		S3	
FILLER METAL										

PREPARED BY:	APPROVED BY:	W/M REV.
DJH 9-16-96		-

WELDING NOTES:
1. TACK BOTH SIDES (PAW)
2. WELD BOTH SIDES ALTERNATING; END WELDS ON TACKS (PAW)

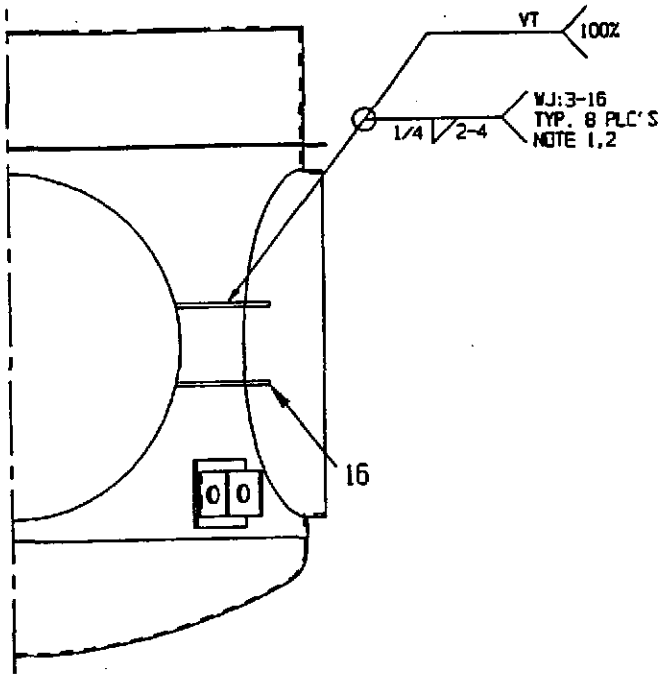

ASSEMBLY NUMBER	LOCATION NUMBER	WELD JOINT	TACKING RECORD: WELDER I.D.	TACKING RECORD: FILLER METAL HEAT/LOT NO.	TACKING RECORD: PROC.	WELD JOINT RECORD: WELDER I.D.	WELD JOINT RECORD: FILLER METAL HEAT/LOT NO.	WELD JOINT RECORD: PROC.	REPAIR RECORD: REPAIR WELDER	REPAIR RECORD: WELD REPAIR FILLER MET.	REPAIR RECORD: PROC.
1	1	3-16	oo	AT6038	T1	LL/W/P	S2046-46	T1			
1	2	3-16	oo	AT6038	T1	LL/W/P	S2046-46	T1			
1	3	3-16	oo	AT6038	T1	LL/W/P	S2046-46	T1			
1	4	3-16	oo	AT6038	T1	LL/W/P	S2046-46	T1			
1	5	3-16	oo	AT6038	T1	LL/W/P	S2046-46	T1			
1	6	3-16	oo	AT6038	T1	LL/W/P	S2046-46	T1			
1	7	3-16	oo	AT6038	T1	P/W/H	AT6028	T1			
1	8	3-16	oo	AT6038	T1	P/W/LL	AT6028	T1			

RANOR, INC · SERIAL NO. 2

WELD MAP/WELD JOINT IDENTIFICATION SHEET

WELD MAP PAGE	CUSTOMER	CUST P.O.	JOB NO.	LEVEL NO.
4A CON'T 4B	PROCESS SYSTEMS	555822-00	7300 F/M	1

DESCRIPTION **LOWER SHELL SUBASSEMBLY** DWG. No. V049-4-003

MATERIAL 304L S/S

WELDING PROCESS:	GMAW		GTAW		FCAW		SMAW		SAW	
WELD PROCEDURES	G1		T1	P-P8-P8-2 REV.0	F1		M1		S1	
	G2		T2	T-P8-P8-PSI REV.0	F2		M2		S2	
	G3		T3		F3		M3		S3	
FILLER METAL										

PREPARED BY: DJH 9-16-96 | APPROVED BY: | W/M REV. _

WELDING NOTES:
1. GTAW WELD FROM BEVEL SIDE
2. GTAW WASH BACKSIDE AS REQUIRED.

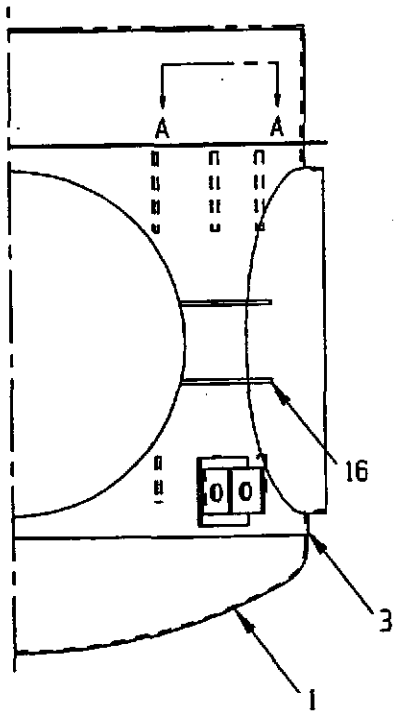

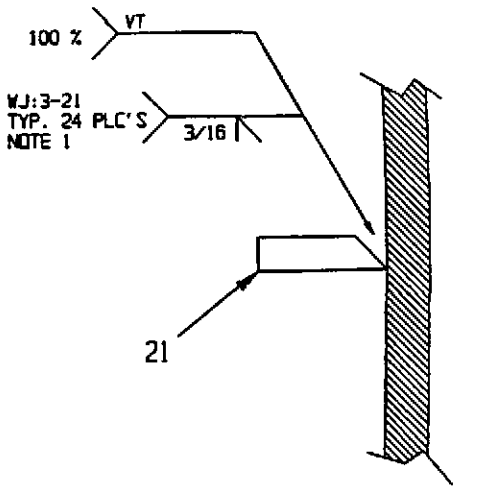

SECTION A-A

ASSEMBLY NUMBER	LOCATION NUMBER	WELD JOINT	TACKING RECORD			WELD JOINT RECORD			REPAIR RECORD		
			WELDER I.D.	FILLER METAL HEAT/LOT NO.	PROC.	WELDER I.D.	FILLER METAL HEAT/LOT NO.	PROC.	REPAIR WELDER	WELD REPAIR FILLER MET.	PROC.
1	1	3-21	W	AT6834	T2	P/LL	AT6834	T2			
1	2	3-21	W	AT6834	T2	LL	AT6834	T2			
1	3	3-21	W	AT6834	T2	LL	AT6834	T2			
1	4	3-21	W	AT6834	T2	LL	AT6834	T2			
1	5	3-21	W	AT6834	T2	LL	AT6834	T2			
1	6	3-21	W	AT6834	T2	LL	AT6834	T2			
1	7	3-21	W	AT6834	T2	LL	AT6834	T2			
1	8	3-21	W	AT6834	T2	LL	AT6834	T2			

RANOR, INC SERIAL NO. 2

WELD MAP/WELD JOINT IDENTIFICATION SHEET

WELD MAP PAGE	CUSTOMER	CUST P.O.	JOB NO.	LEVEL NO.
4B CON'T 5	PROCESS SYSTEMS	555822-00	7300 F/M	1

DESCRIPTION **LOWER SHELL ASSEMBLY** DWG. No. V049-4-003

MATERIAL 304L S/S

WELDING PROCESS:	GMAW		GTAW		FCAW		SMAW		SAW	
WELD PROCEDURES	G1		T1	P-P8-P8-2 REV.0	F1		M1		S1	
	G2		T2	T-P8-P8-PSI REV.0	F2		M2		S2	
	G3		T3		F3		M3		S3	
FILLER METAL										

PREPARED BY: DJH 9-16-96 APPROVED BY: W/M REV. _

ASSEMBLY NUMBER	LOCATION NUMBER	WELD JOINT	TACKING RECORD			WELD JOINT RECORD			REPAIR RECORD		
			WELDER I.D.	FILLER METAL HEAT/LOT NO.	PROC.	WELDER I.D.	FILLER METAL HEAT/LOT NO.	PROC.	REPAIR WELDER	WELD REPAIR FILLER MET.	PROC.
1	9	3-21	W	AT6834	T2	LL	AT6834	T2			
1	10	3-21	W	AT6834	T2	LL	AT6834	T2			
1	11	3-21	W	AT6834	T2	LL	AT6834	T2			
1	12	3-21	W	AT6834	T2	LL	AT6834	T2			
1	13	3-21	W	AT6834	T2	P	AT6834	T2			
1	14	3-21	W	AT6834	T2	P	AT6834	T2			
1	15	3-21	W	AT6834	T2	P	AT6834	T2			
1	16	3-21	W	AT6834	T2	P	AT6834	T2			
1	17	3-21	W	AT6834	T2	P	AT6834	T2			
1	18	3-21	W	AT6834	T2	P	AT6834	T2			
1	19	3-21	W	AT6834	T2	P	AT6834	T2			
1	20	3-21	W	AT6834	T2	P	AT6834	T2			
1	21	3-21	W	AT6834	T2	P	AT6834	T2			
1	22	3-21	W	AT6834	T2	P	AT6834	T2			
1	23	3-21	W	AT6834	T2	P	AT6834	T2			
1	24	3-21	W	AT6834	T2	P	AT6834	T2			

RANOR, INC · SERIAL NO. 2

WELD MAP/WELD JOINT IDENTIFICATION SHEET

WELD MAP PAGE	CUSTOMER	CUST P.O.	JOB NO.	LEVEL NO.
5A CON'T 5B	PROCESS SYSTEMS	555822-00	7300 F/M	1

DESCRIPTION	MATERIAL
LOWER SHELL SUBASSEMBLY DWG. No. V049-4-003	304L S/S

WELDING PROCESS:	GMAW	GTAW	FCAW	SMAW	SAW
WELD PROCEDURES	G1	T1 P-P8-P8-2 REV.0	F1	M1	S1
	G2	T2 T-P8-P8-PSI REV.0	F2	M2	S2
	G3	T3	F3	M3	S3
FILLER METAL					

PREPARED BY:	APPROVED BY:	W/M REV.
DJH 9-16-96		-

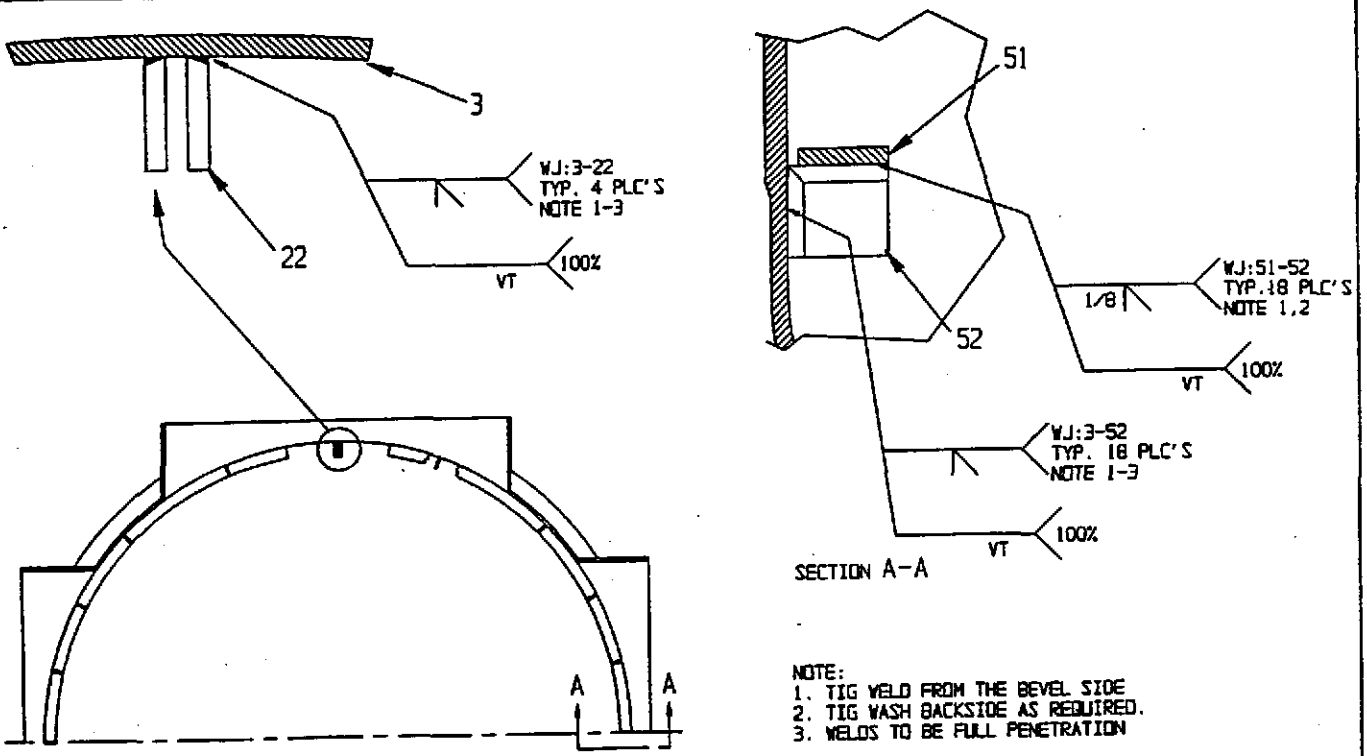

NOTE:
1. TIG WELD FROM THE BEVEL SIDE
2. TIG WASH BACKSIDE AS REQUIRED.
3. WELDS TO BE FULL PENETRATION

ASSEMBLY NUMBER	LOCATION NUMBER	WELD JOINT	TACKING RECORD			WELD JOINT RECORD			REPAIR RECORD		
			WELDER I.D.	FILLER METAL HEAT/LOT NO.	PROC.	WELDER I.D.	FILLER METAL HEAT/LOT NO.	PROC.	REPAIR WELDER	WELD REPAIR FILLER MET.	PROC.
1	1	3-22	P	AT6028	T2	P	AT6028	T2			
1	2	3-22	P	AT6028	T2	P	AT6028	T2			
1	3	3-22	P	AT6028	T2	P	AT6028	T2			
1	4	3-22	P	AT6028	T2	P	AT6028	T2			
1	1	3-52	W	AT6028	T2	P	AT6028	T2			
1	2	3-52	W	AT6028	T2	P	AT6028	T2			
1	3	3-52	W	AT6028	T2	P	AT6028	T2			
1	4	3-52	W	AT6028	T2	P	AT6028	T2			

RANOR, INC · SERIAL NO. 2

WELD MAP/WELD JOINT IDENTIFICATION SHEET

WELD MAP PAGE	CUSTOMER	CUST P.O.	JOB NO.	LEVEL NO.
5B CON'T 5C	PROCESS SYSTEMS	555822-00	7300 F/M	1

DESCRIPTION **LOWER SHELL ASSEMBLY**
DWG. No. V049-4-003

MATERIAL 304L S/S

WELDING PROCESS:	GMAW		GTAW		FCAW		SMAW		SAW	
WELD PROCEDURES	G1		T1	P-P8-P8-2 REV.0	F1		M1		S1	
	G2		T2	T-P8-P8-PSI REV.0	F2		M2		S2	
	G3		T3		F3		M3		S3	
FILLER METAL										

PREPARED BY: DJH 9-16-96 | APPROVED BY: | W/M REV. _

ASSEMBLY NUMBER	LOCATION NUMBER	WELD JOINT	TACKING RECORD			WELD JOINT RECORD			REPAIR RECORD		
			WELDER I.D.	FILLER METAL HEAT/LOT NO.	PROC.	WELDER I.D.	FILLER METAL HEAT/LOT NO.	PROC.	REPAIR WELDER	WELD REPAIR FILLER MET.	PROC.
1	5	3-52	W	AT6028	T2	P	AT6028	T2			
1	6	3-52	W	AT6028	T2	P	AT6028	T2			
1	7	3-52	W	AT6028	T2	P	AT6028	T2			
1	8	3-52	W	AT6028	T2	P	AT6028	T2			
1	9	3-52	W	AT6028	T2	P	AT6028	T2			
1	10	3-52	W	AT6028	T2	P	AT6028	T2			
1	11	3-52	W	AT6028	T2	P	AT6028	T2			
1	12	3-52	W	AT6028	T2	P	AT6028	T2			
1	13	3-52	W	AT6028	T2	P	AT6028	T2			
1	14	3-52	W	AT6028	T2	P	AT6028	T2			
1	15	3-52	W	AT6028	T2	P	AT6028	T2			
1	16	3-52	W	AT6028	T2	P	AT6028	T2			
1	17	3-52	W	AT6028	T2	P	AT6028	T2			
1	18	3-52	W	AT6028	T2	P	AT6028	T2			
1	1	51-52	W	AT6028	T2	W	AT6028	T2			
1	2	51-52	W	AT6028	T2	W	AT6028	T2			
1	3	51-52	W	AT6028	T2	W	AT6028	T2			
1	4	51-52	W	AT6028	T2	W	AT6028	T2			
1	5	51-52	W	AT6028	T2	W	AT6028	T2			
1	6	51-52	W	AT6028	T2	W	AT6028	T2			
1	7	51-52	W	AT6028	T2	W	AT6028	T2			
1	8	51-52	W	AT6028	T2	W	AT6028	T2			
1	9	51-52	W	AT6028	T2	W	AT6028	T2			
1	10	51-52	W	AT6028	T2	W	AT6028	T2			
1	11	51-52	W	AT6028	T2	W	AT6028	T2			

RANOR, INC

SERIAL NO. 2

WELD MAP/WELD JOINT IDENTIFICATION SHEET

WELD MAP PAGE	CUSTOMER	CUST P.O.	JOB NO.	LEVEL NO.
6A CON'T 6B	PROCESS SYSTEMS	555822-00	7300 F/M	1

DESCRIPTION	MATERIAL
LOWER SHELL SUBASSEMBLY DWG. No. V049-4-003	304L S/S

WELDING PROCESS:	GMAW	GTAW	FCAW	SMAW	SAW
WELD PROCEDURES	G1	T1 P-P8-P8-1 REV.0	F1	M1	S1
	G2	T2 T-P8-P8-PSI REV.0	F2	M2	S2
	G3	T3	F3	M3	S3
FILLER METAL					

PREPARED BY:	APPROVED BY:	W/M REV.
DJH 9-16-96		-

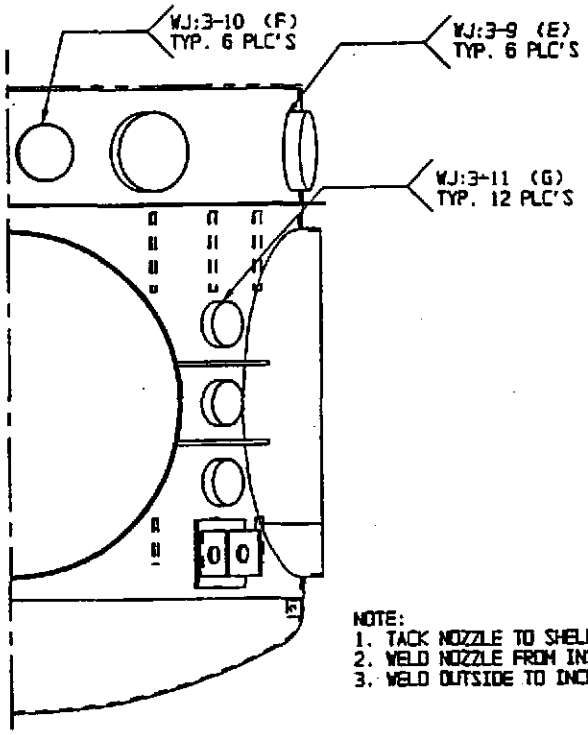

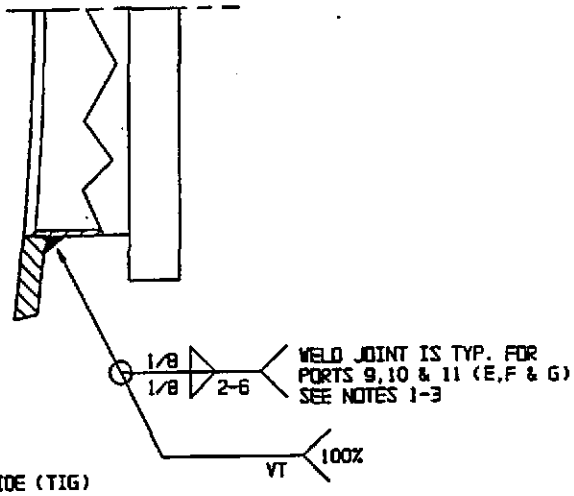

NOTE:
1. TACK NOZZLE TO SHELL FROM OUTSIDE (TIG)
2. WELD NOZZLE FROM INSIDE (TIG)
3. WELD OUTSIDE TO INCLUDE TACKS (TIG)

ASSEMBLY NUMBER	LOCATION NUMBER	WELD JOINT	TACKING RECORD			WELD JOINT RECORD			REPAIR RECORD		
			WELDER I.D.	FILLER METAL HEAT/LOT NO.	PROC.	WELDER I.D.	FILLER METAL HEAT/LOT NO.	PROC.	REPAIR WELDER	WELD REPAIR FILLER MET.	PROC.
1	1	3-10	P	AT6834	T2	LL/P	AT6834	T2			
1	2	3-10	P	AT6834	T2	LL/P	AT6834	T2			
1	3	3-10	P	AT6834	T2	LL/P	AT6834	T2			
1	4	3-10	P	AT6834	T2	LL/P	AT6834	T2			
1	5	3-10	P	AT6834	T2	LL/P	AT6834	T2			
1	6	3-10	P	AT6834	T2	P	AT6834	T2			
1	1	3-11	P	AT6834	T2	WW	AT6834	T2			
1	2	3-11	P	AT6834	T2	WW	AT6834	T2			

RANOR, INC · SERIAL NO. 2

WELD MAP/WELD JOINT IDENTIFICATION SHEET

WELD MAP PAGE	CUSTOMER	CUST P.O.	JOB NO.	LEVEL NO.
5C CON'T 6	PROCESS SYSTEMS	555822-00	7300 F/M	1

DESCRIPTION LOWER SHELL ASSEMBLY
DWG. No. V049-4-003

MATERIAL 304L S/S

WELDING PROCESS:	GMAW		GTAW		FCAW		SMAW		SAW	
WELD PROCEDURES	G1		T1	P-P8-P8-2 REV.0	F1		M1		S1	
	G2		T2	T-P8-P8-PSI REV.0	F2		M2		S2	
	G3		T3		F3		M3		S3	
FILLER METAL										

PREPARED BY: DJH 9-16-96 | APPROVED BY: | W/M REV. -

ASSEMBLY NUMBER	LOCATION NUMBER	WELD JOINT	TACKING RECORD			WELD JOINT RECORD			REPAIR RECORD		
			WELDER I.D.	FILLER METAL HEAT/LOT NO.	PROC.	WELDER I.D.	FILLER METAL HEAT/LOT NO.	PROC.	REPAIR WELDER	WELD REPAIR FILLER MET.	PROC.
1	12	51-52	W	AT6028	T2	W	AT6028	T2			
1	13	51-52	W	AT6028	T2	W	AT6028	T2			
1	14	51-52	W	AT6028	T2	W	AT6028	T2			
1	15	51-52	W	AT6028	T2	W	AT6028	T2			
1	16	51-52	W	AT6028	T2	W	AT6028	T2			
1	17	51-52	W	AT6028	T2	W	AT6028	T2			
1	18	51-52	W	AT6028	T2	W	AT6028	T2			
								T2			

RANOR, INC · SERIAL NO. 2

WELD MAP/WELD JOINT IDENTIFICATION SHEET

WELD MAP PAGE	CUSTOMER	CUST P.O.	JOB NO.	LEVEL NO.
6B CON'T 7	PROCESS SYSTEMS	555822-00	7300 F/M	1

DESCRIPTION	MATERIAL
LOWER SHELL ASSEMBLY DWG. No. V049-4-003	304L S/S

WELDING PROCESS:	GMAW		GTAW		FCAW		SMAW		SAW	
WELD PROCEDURES	G1		T1	P-P8-P8-1 REV.0	F1		M1		S1	
	G2		T2	T-P8-P8-PSI REV.0	F2		M2		S2	
	G3		T3		F3		M3		S3	
FILLER METAL										

PREPARED BY:	APPROVED BY:	W/M REV.
DJH 9-16-96		-

ASSEMBLY NUMBER	LOCATION NUMBER	WELD JOINT	TACKING RECORD			WELD JOINT RECORD			REPAIR RECORD		
			WELDER I.D.	FILLER METAL HEAT/LOT NO.	PROC.	WELDER I.D.	FILLER METAL HEAT/LOT NO.	PROC.	REPAIR WELDER	WELD REPAIR FILLER MET.	PROC.
1	3	3-11	P	AT6834	T2	WW	AT6834	T2			
1	4	3-11	P	AT6834	T2	WW	AT6834	T2			
1	5	3-11	P	AT6834	T2	WW	AT6834	T2			
1	6	3-11	P	AT6834	T2	WW	AT6834	T2			
1	7	3-11	P	AT6834	T2	WW	AT6834	T2			
1	8	3-11	P	AT6834	T2	P	AT6834	T2			
1	12	3-11	P	AT6834	T2	P	AT6834	T2			
1	1	3-9	LL	AT6834	T2	LL/P	AT6834	T2			
1	2	3-9	LL	AT6834	T2	LL/P	AT6834	T2			
1	3	3-9	LL	AT6834	T2	LL/P	AT6834	T2			
1	4	3-9	P	AT6834	T2	LL/P	AT6834	T2			
1	5	3-9	P	AT6834	T2	LL/P	AT6834	T2			
1	6	3-9	P	AT6834	T2	P	AT6834	T2			

RANOR, INC · SERIAL NO. 2

WELD MAP/WELD JOINT IDENTIFICATION SHEET

WELD MAP PAGE	CUSTOMER	CUST P.O.	JOB NO.	LEVEL NO.
7 CON'T 8	PROCESS SYSTEMS	555822-00	7300 F/M	1

DESCRIPTION	MATERIAL
LOWER SHELL SUBASSEMBLY DWG. No. V049-4-003	304L S/S

WELDING PROCESS:	GMAW	GTAW	FCAW	SMAW	SAW
WELD PROCEDURES	G1	T1 P-P8-P8-1 REV.0	F1	M1	S1
	G2	T2 T-P8-P8-PSI REV.0	F2	M2	S2
	G3	T3	F3	M3	S3
FILLER METAL					

PREPARED BY:	APPROVED BY:	W/M REV.
DJH 9-16-96		-

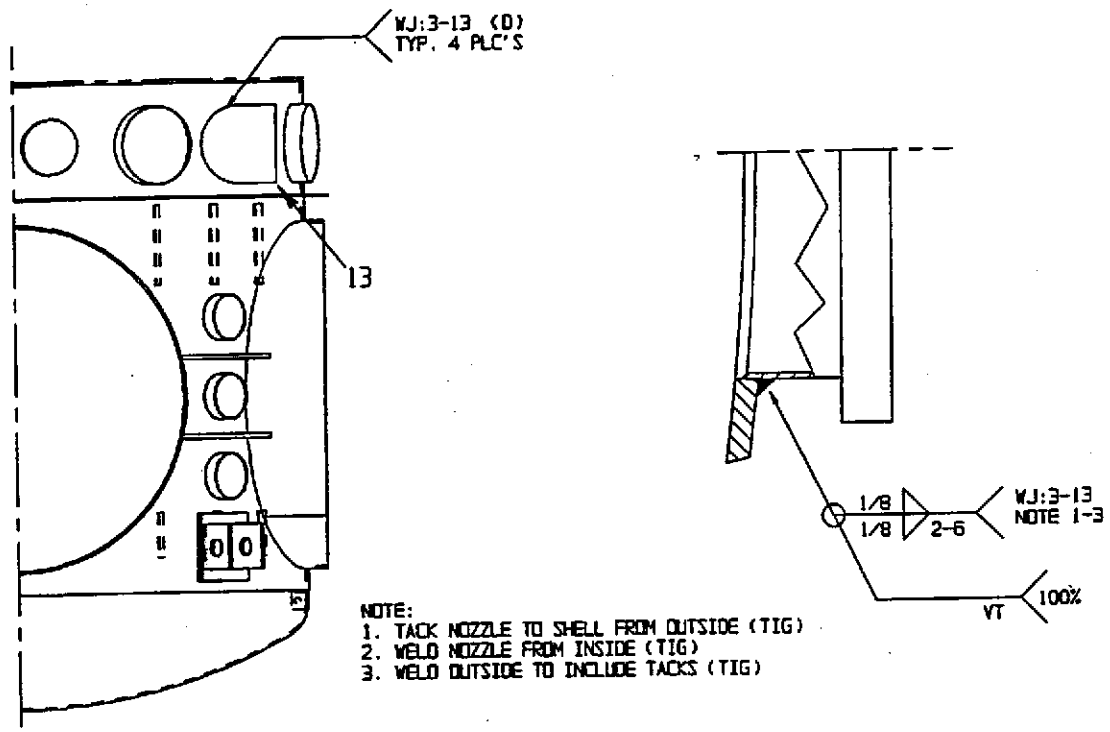

NOTE:
1. TACK NOZZLE TO SHELL FROM OUTSIDE (TIG)
2. WELD NOZZLE FROM INSIDE (TIG)
3. WELD OUTSIDE TO INCLUDE TACKS (TIG)

ASSEMBLY NUMBER	LOCATION NUMBER	WELD JOINT	TACKING RECORD			WELD JOINT RECORD			REPAIR RECORD		
			WELDER I.D.	FILLER METAL HEAT/LOT NO.	PROC.	WELDER I.D.	FILLER METAL HEAT/LOT NO.	PROC.	REPAIR WELDER	WELD REPAIR FILLER MET.	PROC.
1	1	3-13	W	AT6834	T2	LL	S937864	T2			
1	2	3-13	W	AT6834	T2	LL	S937864	T2			
1	3	3-13	W	AT6834	T2	LL	S937864	T2			
1	4	3-13	W	AT6834	T2	LL	S937864	T2			

RANOR, INC · SERIAL NO. 2

WELD MAP/WELD JOINT IDENTIFICATION SHEET

WELD MAP PAGE	CUSTOMER	CUST P.O.	JOB NO.	LEVEL NO.
8 CON'T 9	PROCESS SYSTEMS	555822-00	7300 F/M	1

DESCRIPTION: LOWER SHELL SUBASSEMBLY
DWG. No. V049-4-003

MATERIAL: 304L S/S

WELDING PROCESS:	GMAW		GTAW		FCAW		SMAW		SAW	
WELD PROCEDURES	G1		T1	P-P8-P8-1 REV.0	F1		M1		S1	
	G2		T2	T-P8-P8-PSI REV.0	F2		M2		S2	
	G3		T3		F3		M3		S3	
FILLER METAL										

PREPARED BY: DJH 9-16-96 | APPROVED BY: | W/M REV. -

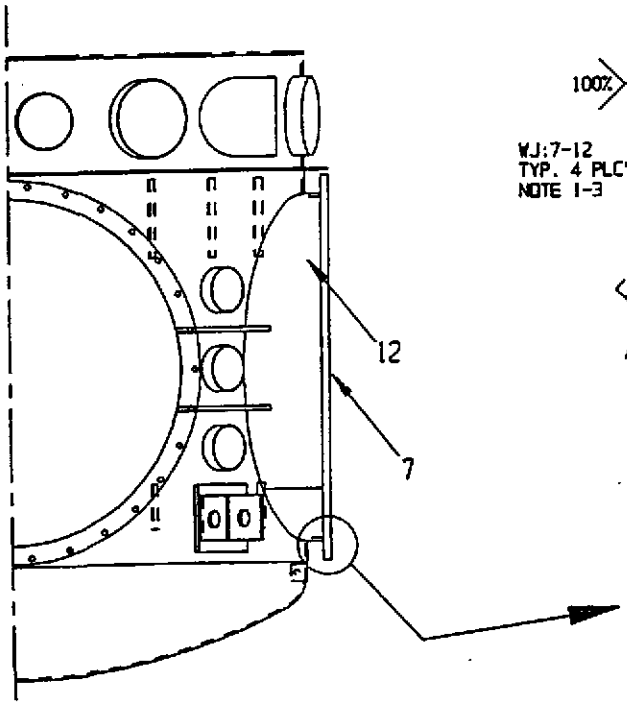

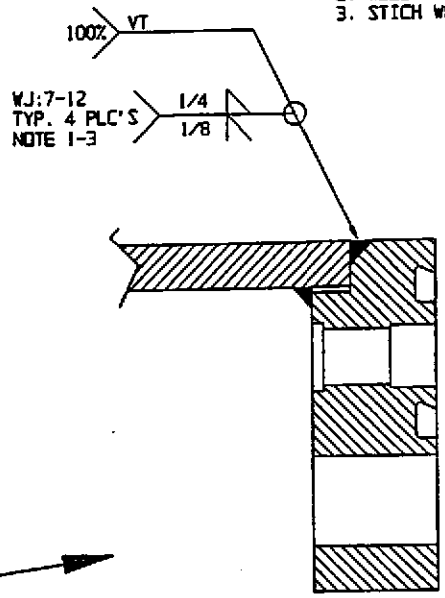

NOTE:
1. TACK THE OUTSIDE (TIG)
2. WELD INSIDE (TIG)
3. STICH WELD OUTSIDE (PAW)

ASSEMBLY NUMBER	LOCATION NUMBER	WELD JOINT	TACKING RECORD			WELD JOINT RECORD			REPAIR RECORD		
			WELDER I.D.	FILLER METAL HEAT/LOT NO.	PROC.	WELDER I.D.	FILLER METAL HEAT/LOT NO.	PROC.	REPAIR WELDER	WELD REPAIR FILLER MET.	PROC.
1	1	7-12	W	AT6834	T2	LL	AT6834 S437864	T2 T1			
1	2	7-12	W	AT6834	T2	LL	AT6834 S437864	T2 T1			
1	3	7-12	W	AT6834	T2	LL	AT6834 S437864	T2 T1			
1	4	7-12	LL	AT6834	T2	LL	AT6834 S437864	T2 T1			

RANOR, INC · SERIAL NO. 2

WELD MAP/WELD JOINT IDENTIFICATION SHEET

WELD MAP PAGE	CUSTOMER	CUST P.O.	JOB NO.	LEVEL NO.
9 CON'T 10	PROCESS SYSTEMS	555822-00	7300 F/M	1

DESCRIPTION	MATERIAL
LOWER SHELL SUBASSEMBLY DWG. No. V049-4-003	304L S/S

WELDING PROCESS:	GMAW	GTAW	FCAW	SMAW	SAW
WELD PROCEDURES	G1	T1 P-P8-P8-1 REV.0	F1	M1	S1
	G2	T2 T-P8-P8-PSI REV.0	F2	M2	S2
	G3	T3	F3	M3	S3
FILLER METAL					

PREPARED BY:	APPROVED BY:	W/M REV.
DJH 9-16-96	—	—

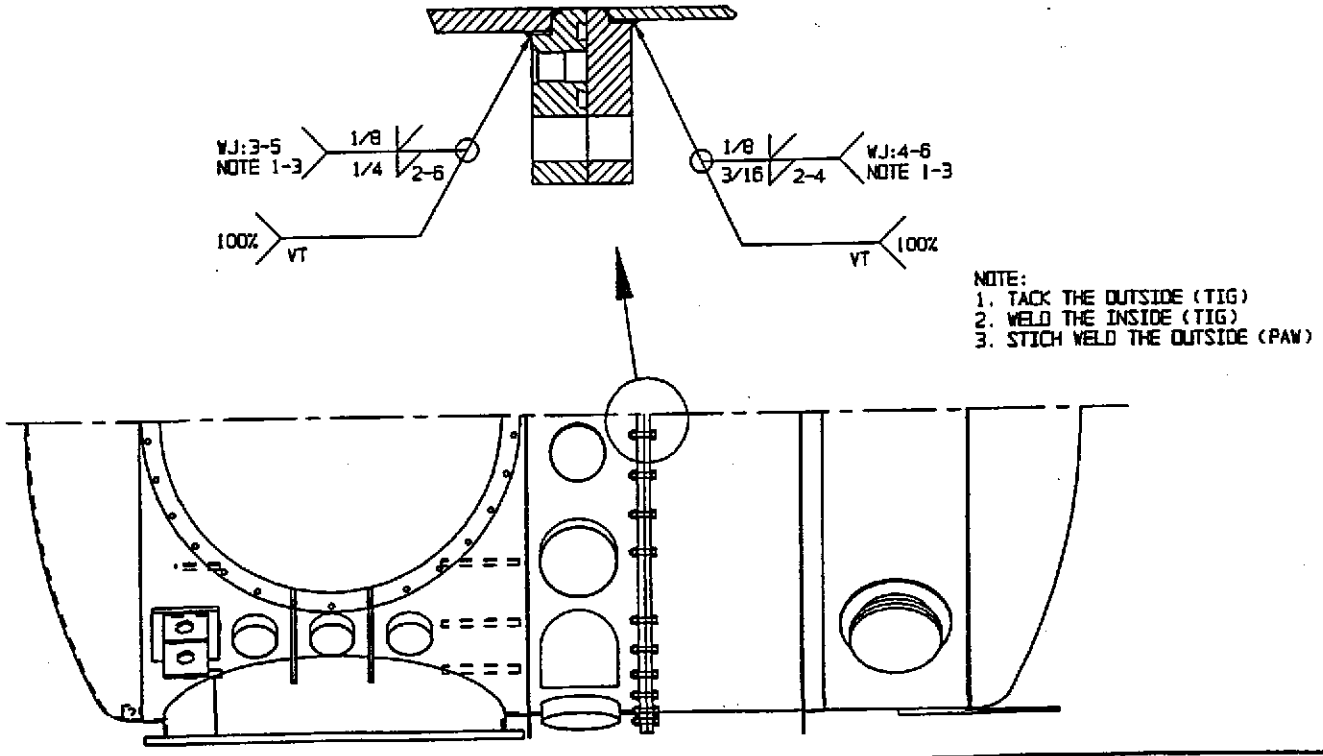

ASSEMBLY NUMBER	LOCATION NUMBER	WELD JOINT	TACKING RECORD: WELDER I.D.	TACKING RECORD: FILLER METAL HEAT/LOT NO.	TACKING RECORD: PROC.	WELD JOINT RECORD: WELDER I.D.	WELD JOINT RECORD: FILLER METAL HEAT/LOT NO.	WELD JOINT RECORD: PROC.	REPAIR RECORD: REPAIR WELDER	REPAIR RECORD: WELD REPAIR FILLER MET.	REPAIR RECORD: PROC.
1	1	3-5	P	AT6834	T2	W	5437864	T2			
1	1	4-6	W	AT6834	T2	P	5437864 AT6834	T1 T2			
		3-5	—	—	—	LL	5437864	T1			
		4-6	—	—	—	LL	5437864	T1			

RANOR, INC

INSPECTION/NONDESTRUCTIVE EXAMINATION RECORD

WELD MAP	CUSTOMER:	CUSTOMER PO:	JOB NO.:	LEVEL NO.:
10 CONT. --	PROCESS SYSTEMS INT.	555822-00	7300 F/M	1

DESCRIPTION:	MATERIAL:
LOWER SHELL ASSEMBLY; DWG NO. V049-4-003	304L S/S

PREPARED BY	APPROVED BY:	WELD MAP REV.:
DJH 6-17-96	—	—

VISUAL EXAMINATION REPORT - PROCEDURE NO. RQCP-25, REV. 4

AREA EXAMINED: ☐ ROOT ☒ FINAL ☐ BEVELED EDGES
SURFACE CONDITION: ☒ AS-WELDED ☐ GROUND ☐ MACHINED

	WELD JOINT NUMBER	WJ:3-20 4 PLC'S	WJ:1-9 1-3	WJ:3-15	WJ:3-12 4 PLC'S	WJ:3-16 8 PLC'S	WJ:3-21 21 PLC'S	WJ:3-22 4 PLC'S	WJ:3-52 18 PLC'S	WJ:51-52 18 PLC'S
	NDE EXAMINER LEVEL DATE	MB II 2-5-97	MB II 2-5-97	MB II 2-5-97	MB II 2-5-97	MB II 2-5-97	MB II 2-5-97	MB II 2-5-97	MB II 2-5-97	MB II 2-5-97
	CUSTOMER QUALITY REP. DATE									
Cracks		None	None	None	None	None	None	None	None	None
Fusion		OK	OK	OK	OK	OK	OK	OK	OK	OK
Crater Filled to Full Cross-section of Weld		—	OK	—	OK	—	OK	OK	OK	OK
Weld Profile		OK	OK	OK	OK	OK	OK	OK	OK	OK
Undercut		None	None	None	None	None	None	None	None	None
Piping Porosity		None	None	None	None	None	None	None	None	None
Fillet Weld Size		OK	—	OK	OK	OK	—	—	—	—
Visual Indications After Repair		—	—	—	—	—	—	—	—	—
Final Weld Joint Acceptance		Accept	Accept	Accept	Accept	Accept	Accept	Accept	Accept	Accept

VISUAL EXAMINATION REPORT - PROCEDURE NO. RQCP-25, REV. 4

AREA EXAMINED: ☐ ROOT ☒ FINAL ☐ BEVELED EDGES
SURFACE CONDITION: ☒ AS-WELDED ☐ GROUND ☐ MACHINED

	WELD JOINT NUMBER	WJ:3-10 6 PLC'S	WJ:3-11 12 PLC'S	WJ:3-9 6 PLC'S	WJ:3-13 4 PLC'S	WJ:7-12 4 PLC'S	WJ:3-5	WJ:4-6		
	NDE EXAMINER LEVEL DATE	MB II 2-5-97	MB II 2-5-97	MB II 2-5-97	MB II 2-5-97	MB II 2-5-97	MB II 2-5-97	MB II 2-5-97		
	CUSTOMER QUALITY REP. DATE									
Cracks		None	None	None	None	None	None	None		
Fusion		OK	OK	OK	OK	OK	OK	OK		
Crater Filled to Full Cross-section of Weld		—	—	—	—	OK	OK	OK		
Weld Profile		OK	OK	OK	OK	OK	OK	OK		
Undercut		None	None	None	None	None	None	None		
Piping Porosity		None	None	None	None	None	None	None		
Fillet Weld Size		OK	OK	OK	OK	OK	OK	OK		
Visual Indications After Repair		—	—	—	—	—	—	—		
Final Weld Joint Acceptance		Accept	Accept	Accept	Accept	Accept	Accept	Accept		

NDE Examiner: [signature] Level: II Date: 2-5-97

RANOR, INC. SERIAL NO. 2

WELD MAP/WELD JOINT IDENTIFICATION SHEET

WELD MAP PAGE	CUSTOMER	CUST P.O.	JOB NO.	LEVEL NO.
1 CON'T 2	PROCESS SYSTEMS	555822-00	7300 F/M	2

DESCRIPTION: UPPER SHELL SUBASSEMBLY
DWG. No. V049-4-003

MATERIAL: 304L S/S

WELDING PROCESS:		GMAW		GTAW		FCAW		SMAW		SAW
WELD PROCEDURES	G1		T1	P-P8-P8-1 REV.0	F1		M1		S1	
	G2		T2	T-P8-P8-PSI REV.0	F2		M2		S2	
	G3		T3		F3		M3		S3	
FILLER METAL										

PREPARED BY: DJH 9-18-96 | APPROVED BY: — | W/M REV. —

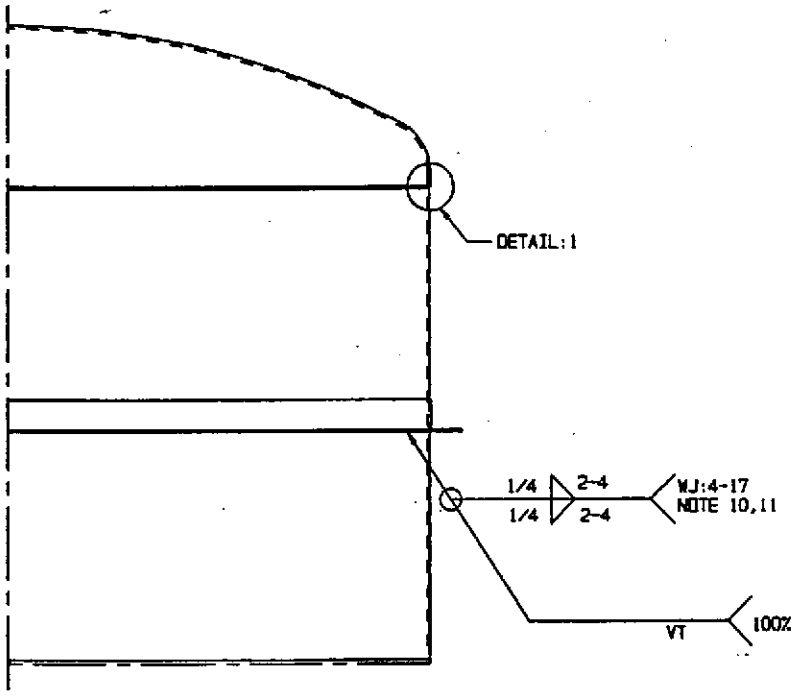

WELDING NOTES:
1. GTAW PASS #1 FROM THE O.D.
2. GTAW PASS #2 FROM THE I.D.
3. PAW PASSES FROM THE I.D. AS REQUIRED.
4. FIT-UP WITH 1/8 TO 3/16 GAP
5. TACK FROM OUTSIDE WITH PURGE INSIDE (GTAW)
6. ONE INCH TACKS ON TEN INCH CENTERS.
7. BACKSTEP WELD ROOT PASS FROM TACK TO TACK FROM OUTSIDE (TIG)
8. GTAW PASS FROM INSIDE (TIG)
9. FILL FROM I.D. AS REQUIRED (PAW)
10. TACK BOTH SIDES (PAW)
11. WELD BOTH SIDES ALTERNATING; END WELDS ON TACKS (PAW)

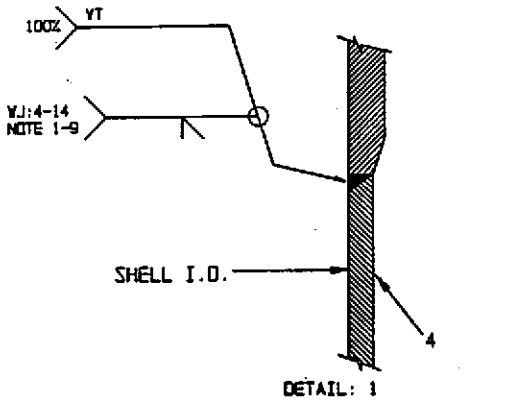

ASSEMBLY NUMBER	LOCATION NUMBER	WELD JOINT	TACKING RECORD: WELDER I.D.	TACKING RECORD: FILLER METAL HEAT/LOT NO.	TACKING RECORD: PROC.	WELD JOINT RECORD: WELDER I.D.	WELD JOINT RECORD: FILLER METAL HEAT/LOT NO.	WELD JOINT RECORD: PROC.	REPAIR RECORD: REPAIR WELDER	REPAIR RECORD: WELD REPAIR FILLER MET.	REPAIR RECORD: PROC.
1	1	4-17	O	CT6824	T2	P-W	CT6824	T1			
1	1	4-14	P	AT6641	T2	P	AT6641	T2			
		4-14	—	—	—	W W	AT6641	T2			
		4-14	—	—	—	W	S2046-46	T1			
		~~4-17~~									

RANOR, INC · SERIAL NO. 2

WELD MAP/WELD JOINT IDENTIFICATION SHEET

WELD MAP PAGE	CUSTOMER	CUST P.O.	JOB NO.	LEVEL NO.
2 CON'T 3	PROCESS SYSTEMS	555822-00	7300 F/M	2

DESCRIPTION: UPPER SHELL SUBASSEMBLY
DWG. No. V049-4-003

MATERIAL: 304L S/S

WELDING PROCESS:	GMAW		GTAW		FCAW		SMAW		SAW	
WELD PROCEDURES	G1		T1	P-P8-P8-1 REV.0	F1		M1		S1	
	G2		T2	T-P8-P8-PSI REV.0	F2		M2		S2	
	G3		T3		F3		M3		S3	
FILLER METAL										

PREPARED BY: DJH 9-18-96 | APPROVED BY: | W/M REV. _

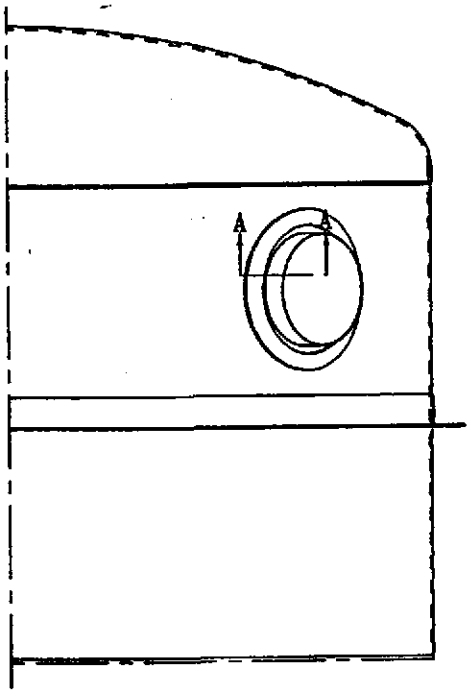

WELDING NOTES:
1. TACK NOZZLE TO SHELL FROM OUTSIDE (TIG)
2. WELD FROM INSIDE (TIG)
3. WELD FROM TACK TO TACK ON THE OUTSIDE (TIG)
4. TACK BOTH SIDES (PAW)
5. WELD BOTH SIDES (PAW)

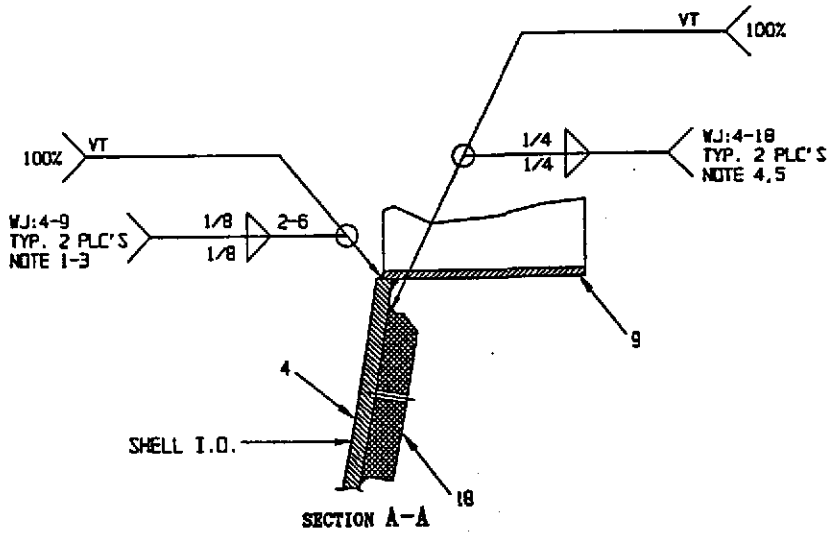

SECTION A-A

ASSEMBLY NUMBER	LOCATION NUMBER	WELD JOINT	TACKING RECORD: WELDER I.D.	TACKING RECORD: FILLER METAL HEAT/LOT NO.	TACKING RECORD: PROC.	WELD JOINT RECORD: WELDER I.D.	WELD JOINT RECORD: FILLER METAL HEAT/LOT NO.	WELD JOINT RECORD: PROC.	REPAIR RECORD: REPAIR WELDER	REPAIR RECORD: WELD REPAIR FILLER MET.	REPAIR RECORD: PROC.
1	1	4-9	O	AT6834	T2	W	AT6834	T2			
1	2	4-9	O	AT6834	T2	W	AT6834	T2			
1	1	4-18	O	AT6834	T2	WW	S437864 AT6834	F1 T2®			
1	2	4-18	O	AT6834	T2	WW	S437864 AT6834	F1 T2®			

RANOR, INC · SERIAL NO. 2

WELD MAP/WELD JOINT IDENTIFICATION SHEET

WELD MAP PAGE	CUSTOMER	CUST P.O.	JOB NO.	LEVEL N
3 CON'T 4	PROCESS SYSTEMS	555822-00	7300 F/M	2

DESCRIPTION: UPPER SHELL SUBASSEMBLY
DWG. No. V049-4-003

MATERIAL: 304L S/S

WELDING PROCESS:	GMAW		GTAW		FCAW		SMAW		SAW	
WELD PROCEDURES	G1		T1	P-P8-P8-1 REV.0	F1		M1		S1	
	G2		T2	T-P8-P8-PSI REV.0	F2		M2		S2	
	G3		T3		F3		M3		S3	
FILLER METAL										

PREPARED BY: DJH 9-18-96 | APPROVED BY: ____ | W/M REV. _

WELDING NOTE:
1. (PAW) WELD AS REQUIRED.
2. WELD 3 SIDES ONLY, DO NOT WELD BEHIND LIFT LUG.

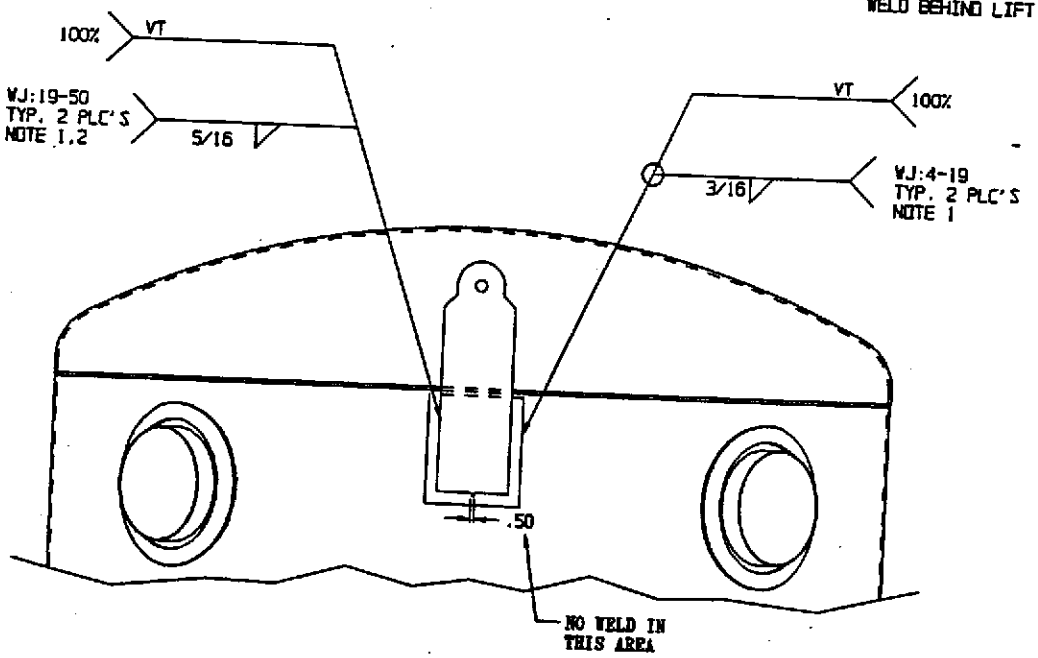

ASSEMBLY NUMBER	LOCATION NUMBER	WELD JOINT	TACKING RECORD WELDER I.D.	TACKING RECORD FILLER METAL HEAT/LOT NO.	TACKING RECORD PROC.	WELD JOINT RECORD WELDER I.D.	WELD JOINT RECORD FILLER METAL HEAT/LOT NO.	WELD JOINT RECORD PROC.	REPAIR RECORD REPAIR WELDER	REPAIR RECORD WELD REPAIR FILLER MET.	REPAIR RECORD PROC.
1	1	4-19	O	CT6824	T2	P	CT6824	T1			
1	2	4-19	O	CT6824	T2	W	CT6824	T1			
1	1	19-50	O	CT6824	T2	P	CT6824	T1			
1	2	19-50	O	CT6824	T2	W	CT6824	T1			

RANOR, INC · SERIAL NO. 2

WELD MAP/WELD JOINT IDENTIFICATION SHEET

WELD MAP PAGE	CUSTOMER	CUST P.O.	JOB NO.	LEVEL N
4 CON'T 5	PROCESS SYSTEMS	555822-00	7300 F/M	2

DESCRIPTION: UPPER SHELL SUBASSEMBLY
DWG. No. V049-4-003

MATERIAL: 304L S/S

WELDING PROCESS:	GMAW		GTAW		FCAW		SMAW		SAW	
WELD PROCEDURES	G1		T1	P-P8-P8-1 REV.0	F1		M1		S1	
	G2		T2	T-P8-P8-PSI REV.0	F2		M2		S2	
	G3		T3		F3		M3		S3	
FILLER METAL										

PREPARED BY: DJH 9-18-96 | APPROVED BY: — | W/M REV. —

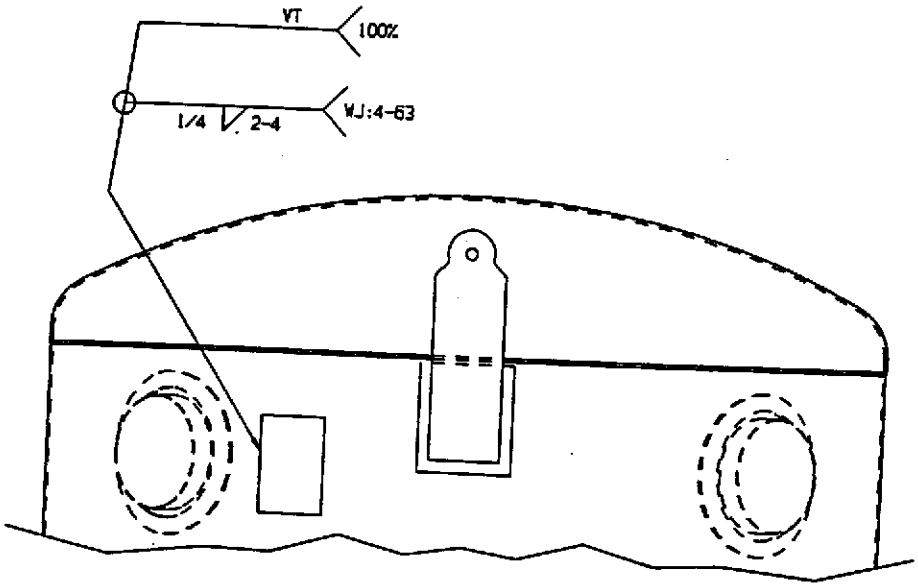

ASSEMBLY NUMBER	LOCATION NUMBER	WELD JOINT	TACKING RECORD			WELD JOINT RECORD			REPAIR RECORD		
			WELDER I.D.	FILLER METAL HEAT/LOT NO.	PROC.	WELDER I.D.	FILLER METAL HEAT/LOT NO.	PROC.	REPAIR WELDER	WELD REPAIR FILLER MET.	PROC.
1	1	4-63	O	CT6824	T2	P	CT6824	T1			

RANOR, INC

S/N 2

INSPECTION/NONDESTRUCTIVE EXAMINATION RECORD

WELD MAP	CUSTOMER:	CUSTOMER PO:	JOB NO.:	LEVEL NO.:
5 CONT. --	PROCESS SYSTEMS INT.	555822-00	7300 F/M	2

DESCRIPTION:	MATERIAL:
UPPER SHELL ASSEMBLY; DWG NO. V049-4-003	304L S/S

PREPARED BY	APPROVED BY:	WELD MAP REV.:
DJH 6-18-96	—	—

VISUAL EXAMINATION REPORT - PROCEDURE NO. RQCP-25, REV. 4

AREA EXAMINED: ☐ ROOT ☒ FINAL ☐ BEVELED EDGES

SURFACE CONDITION: ☒ AS-WELDED ☐ GROUND ☐ MACHINED

	WELD JOINT NUMBER	WJ:4-17	WJ:4-14	WJ:4-9 2 PLC'S	WJ:4-18 2 PLC'S	WJ:4-19 2 PLC'S	WJ:19-50 2 PLC'S	WJ:4-63		
	NDE EXAMINER LEVEL DATE	MB II 1-22-97	MB II 1-22-97	MB II 1-22-97	MB II 1-22-97	MB II 1-22-97	MB II 1-22-97	MB II 1-22-97		
	CUSTOMER QUALITY REP. DATE									
Cracks		None	None	None	None	None	None	None		
Fusion		OK	OK	OK	OK	OK	OK	OK		
Crater Filled to Full Cross-section of Weld		—	OK	—	—	—	—	—		
Weld Profile		OK	OK	OK	OK	OK	OK	OK		
Undercut		None	None	None	None	None	None	None		
Piping Porosity		None	None	None	None	None	None	None		
Fillet Weld Size		OK	—	OK	OK	OK	OK	OK		
Visual Indications After Repair		—	—	—	—	—	—	—		
Final Weld Joint Acceptance		Acc.	Acc.	Acc.	Acc.	Acc.	Acc.	Acc.		

VISUAL EXAMINATION REPORT - PROCEDURE NO. RQCP-25, REV. 4

AREA EXAMINED: ☐ ROOT ☐ FINAL ☐ BEVELED EDGES

SURFACE CONDITION: ☐ AS-WELDED ☐ GROUND ☐ MACHINED

	WELD JOINT NUMBER									
	NDE EXAMINER LEVEL DATE									
	CUSTOMER QUALITY REP. DATE									
Cracks										
Fusion										
Crater Filled to Full Cross-section of Weld										
Weld Profile										
Undercut										
Piping Porosity										
Fillet Weld Size										
Visual Indications After Repair										
Final Weld Joint Acceptance										

NDE Examiner: [signature] SMS QA RANOR Level: II Date: 1/22/97

7300 F/

RAMOR, INC LEV 2C BILL OF MATERIAL

FORM QA 4.1
REV. 1 (6/22/90)

DUE DATE AS NOTED ON P.O.

CUSTOMER PROCESS SYS. INT. DRAWING NO. V049-4-003 UNITS REQUIRED 5 sets SHEET 1 OF 1

JOB NO. 7300 F/ PART DESCRIPTION UPPER FLANGE & MISC. PARTS PREPARED BY ORB Q.C. APPROVAL

ITEM NO.	QUANTITY	MATERIAL SPECIFICATION	THICKNESS	SIZE	LEV	SKETCH	SHEAR	SAW	THERMAL CUTTING	BEVEL	PRE-MACH.	FORM	COMMENTS	MATERIAL S-P-C	HEAT NUMBER
6	5	304L SS	1¼	112½ ϕ O.D. X 104¼ ϕ I.D.							DWG —		V049-4-041 FLANGE	C	
17	5	304L SS	¼	4" X 4" X ¼ X 165 23/32		#3		—		—				C	
18	10	304L SS	½"	20¼" O.D. X 15.0" I.D. *		#4			#3 ✓	—			SN-3	C	39233-4A
19	10	304L SS	½"	12.0 x 13½ ~~6 PCS.~~ *		#4			#7 ✓		DWG —	4 PCS. →	4 PCS. - SN-2 → 6 PCS - SN-3	C	96985-1B 39233-4A
50	10	304L SS	½"	9 x 28 ½ ~~6 PCS.~~ OUT *		#5			DNC ✓	4	PCS. —	6 PCS →	SN-2 SN-3	C	96985-1B 39233-4A
63	5	304L SS	½"	8 x 12 *					#7 ✓				SN-3	C	39233-4A

* BURNING NOTE:

ITEMS 18, 19, 50, & 63 MUST BE BURN'T FROM 52 ¼" INSIDE RADIUS FORMED STOCK. SEE SKETCH #4 & 5 TYP.

RECEIVED NOV 0 1 1991 Job 1100FM

Arcos Alloys

A Division of Hoskins Manufacturing Company
Mount Carmel, PA 17851

DATE 10/23/91

ASME CERTIFICATE QSC-448
EXPIRATION DATE: OCT.23/93

CERTIFICATION OF TESTS

SOLD TO:
RANOR, INC.
BELLA DRIVE
P.O. BOX 458
WESTMINSTER, MA 01473

SHIPPED TO:
SAME

RECEIVED BY SP 11-29-91 RANOR Q.C. S.P.

N/16028

ARCOS S.O. NO.	CUSTOMER ORDER NO.	CONSIGNEE ORDER NO.	DATE SHIPPED
45447	32252	N/A	10/23/91

ITEM	SIZE	GRADE	LOT NO./ALLOY NO.	QUANTITY
3	1/16 X 36"	ARCOS 308L	AT6028	30#

SPECIFICATION: ASME SFA 5.9 CLASS ER308L ASME SECTION II, PART C, ASME B&PVC SECTION III, SUBSECTION NB2000, NB2400, 1989 EDITION AND ALL PARAS AND ADDENDA THRU 1990 AND 10CFR21 APPLIES.

CHEMICAL ANALYSIS WELD

C	Mn	Si	S	P	Cr	Ni	Mo	Cb	Cb + Ta
.01	1.9	.48	.01	.02	19.9	10.6	.12		.032

Ta	Ti	Al	Co	Cu	Fe	V			
	.000			.08		.076			

ADDITIONAL TESTS RESULTS

Ferrite - Diagram: NB2433.1-1 7FN
Magna Gage: 7FN
X-Ray
Bends

	As Welded	Heat Treated
Charpys:		
Tensiles:		
Yield		
Tensile		
Elong.		
Red. of Area		

OTHER INFORMATION LOT CLASSIFICATION - S1
INTENSITY OF TESTING - SCHEDULE F

THIS MATERIAL IS FREE FROM MERCURY, RADIUM OR ALPHA PARTICLE CONTAMINATION.

We hereby certify that the above material has been tested in accordance with the listed specification and is in conformance with all requirements.

ARCOS

Q.A. MANAGER

QUALITY ASSURANCE DEPARTMENT

49

Arcos Alloys

A Division of Hoskins Manufacturing Company
Mount Carmel, PA 17851

DATE 03/19/96

CERTIFICATION OF TESTS

ASME CERTIFICATE QSC-448
EXPIRATION DATE: OCT.23/96

SOLD TO:

RANOR, INC.
BELLA DRIVE
P.O. BOX 458
WESTMINSTER, MA 01473

SHIPPED TO:

SAME

AT6824

ARCOS S.O. NO.	CUSTOMER ORDER NO.	CONSIGNEE ORDER NO.	DATE SHIPPED
59233	45898	N/A	03/19/96

ITEM	SIZE	GRADE	LOT NO./ALLOY NO.	QUANTITY
05	1/16 X 36"	ARCOS 308L	AT6824	100#

SPECIFICATION: ASME SFA 5.9 CLASS ER308L ASME SECTION II, PART C, ASME B&PVC SECTION III, SUBSECTION NB2500, 1995 EDITION, NO ADDENDA. 10CFR21 AND 10CFR50 APP. B APPLY.

CHEMICAL ANALYSIS WIRE

C	Mn	Si	S	P	Cr	Ni	Mo	Cb	Cb + Ta
.02	2.1	.43	.01	.02	20.1	9.9	.08		.016

Ta	Ti	Al	Co	Cu	Fe	V			
	.000			.03		.057			

ADDITIONAL TESTS RESULTS

Ferrite - Diagram: NB2433.1-1 11FN
Magna Gage: 9FN
X-Ray
Bends

	As Welded	Heat Treated
Charpys:		
Tensiles:		
Yield		
Tensile		
Elong.		
Red. of Area		

OTHER INFORMATION

LOT CLASSIFICATION - S1
INTENSITY OF TESTING - SCHEDULE F
50# RANOR JOB #5100FM; 50# RANOR JOB #6000FM

TEJ 617 RANOR 3/26/96 mj

THIS MATERIAL IS FREE FROM MERCURY, RADIUM OR ALPHA PARTICLE CONTAMINATION.

We hereby certify that the above material has been tested in accordance with the listed specification and is in conformance with all requirements.

ARCOS

Q.A. MANAGER

QUALITY ASSURANCE DEPARTMENT

60

Jb 7300FM
PO 48385

Arcos Alloys
A Division of Hoskins Manufacturing Company
Mount Carmel, PA 17851

DATE 12/06/96

CERTIFICATION OF TESTS

SOLD TO:

RANOR, INC.
BELLA DRIVE
P.O. BOX 458
WESTMINSTER, MA 01473

SHIPPED TO:

SAME

ARCOS S.O. NO.	CUSTOMER ORDER NO.	CONSIGNEE ORDER NO.	DATE SHIPPED
61361	48385	N/A	12/06/96

ITEM	SIZE	GRADE	LOT NO./ALLOY NO.	QUANTITY
1	1/16 X 36"	ARCOS 308L	AT6834	100#

SPECIFICATION: AWS A5.9-93 CLASS ER308L ASME SFA 5.9
ASME SECTION II, PART C, 1995 EDITION,
AND ALL PARAS AND ADDENDA THRU 1995.

CHEMICAL ANALYSIS WIRE

C	Mn	Si	S	P	Cr	Ni	Mo	Cb	Cb + Ta
.02	2.1	.50	.01	.01	20.1	10.1	.03		

Ta	Ti	Al	Co	Cu	Fe	V			
				.04					

ADDITIONAL TESTS RESULTS

Ferrite - Diagram: _____
Magna Gage: _____
X-Ray _____
Bends _____

12/10/96 RJ

	As Welded	Heat Treated
Charpys:		
Tensiles:		
Yield		
Tensile		
Elong.		
Red. of Area		

OTHER INFORMATION
LOT CLASSIFICATION - S1
INTENSITY OF TESTING - SCHEDULE F

THIS MATERIAL IS FREE FROM MERCURY, RADIUM OR ALPHA PARTICLE CONTAMINATION.

We hereby certify that the above material has been tested in accordance with the listed specification and is in conformance with all requirements.

ARCOS

W. Webb Q.A. MANAGER

QUALITY ASSURANCE DEPARTMENT

51

RECEIVED AUG 1 4 1995

Arcos Alloys

A Division of Hoskins Manufacturing Company
Mount Carmel, PA 17851

DATE 08/07/95

CERTIFICATION OF TESTS

ASME CERTIFICATE QSC-448
EXPIRATION DATE:OCT.23/96

SOLD TO:
RANOR, INC.
P.O. BOX 458
BELLA DRIVE
WESTMINSTER, MA 01473

SHIPPED TO:
SAME

Stk
PO 43670

ARCOS S.O. NO.	CUSTOMER ORDER NO.	CONSIGNEE ORDER NO.	DATE SHIPPED
57478	43670	N/A	08/07/95

ITEM	SIZE	GRADE	LOT NO./ALLOY NO.	QUANTITY
01	1/16 X 36"	ARCOS 308L	AT6641	50#

SPECIFICATION: ASME SFA 5.9 CLASS ER308L ASME SECTION II, PART C, ASME B&PVC SECTION III, SUBSECTION NB2400, 1992 EDITION, AND ALL PARAS AND ADDENDA THRU 1994 AND 10CFR21 APPLIES.

CHEMICAL ANALYSIS WIRE

C ✓	Mn ✓	Si ✓	S ✓	P ✓	Cr ✓	Ni ✓	Mo ✓	Cb	Cb + Ta
.01	2.1	.55	.01	.02	19.9	10.0	.08		.006

Ta	Ti	Al	Co	Cu ✓	Fe	V	N		
	.000			.05		.053	.069		

ADDITIONAL TESTS RESULTS

Ferrite - Diagram: NB2433.1-1 10FN
Magna Gage: 8FN ✓
X-Ray _____
Bends _____

	As Welded	Heat Treated
Charpys:		
Tensiles:		
Yield		
Tensile		
Elong.		
Red. of Area		

TEST RITE RANOR 8/14/95

OTHER INFORMATION LOT CLASSIFICATION - S1
INTENSITY OF TESTING - SCHEDULE F

THIS MATERIAL IS FREE FROM MERCURY, RADIUM OR ALPHA PARTICLE CONTAMINATION.

We hereby certify that the above material has been tested in accordance with the listed specification and is in conformance with all requirements.

ARCOS

Q.A. MANAGER
QUALITY ASSURANCE DEPARTMENT

52

RANOR, INC

NONCONFORMANCE REPORT

FORM QA 12.1 REV. 6 (07/30/96)

NCR NUMBER: NCR-1001 | PAGE 1 OF 1 | SKETCH ATTACHED ☐

JOB NUMBER	CUSTOMER	PURCHASE ORDER NUMBER	QUANTITY
7300 F/m	P.S.I.	555822-00	1

PART DESCRIPTION	DOCUMENT NUMBER AND REVISION	SERIAL NUMBER
LIGO Vacuum Chamber	Dwg. V049-4-101 Rev. 0	7300-1

CODE/SPECIFICATION: ☐ ASME SECTION III ☐ SAFETY RELATED ☐ ASME SECTION VIII ☐ MIL SPEC ☒ COMMERCIAL

DESCRIPTION OF NONCONFORMANCE

ITEM	REQUIREMENT	NONCONFORMANCE
1	It. 4 Upper Shell to It. 6	Actual weld was laid out
	Upper Flange to have intermit-	and welded using a
	tent fillet weld 3/16" 2-4	3/16" 3-6 spacing.
	spacing per WDS-35	

REMARKS:

ROUTING SHEET IDENTIFIED WITH NCR NO. AND DATE OF ISSUE: BY [signature] DATE: 1-6-97

ORIGINATOR/INSPECTOR: [signature] DATE: 1-6-97

RESPONSIBILITY FOR NONCONFORMANCE

☐ VENDOR ☐ DESIGN ☐ MATERIAL ☐ CUTTING ☐ FORMING ☒ WELDING
☐ MACHINING ☐ INSPECTION ☐ CALIBRATION ☐ QC ☐ QA ☐ OTHER

TECHNICAL JUSTIFICATION/DESCRIPTION OF DISPOSITION

ITEM	TECHNICAL JUSTIFICATION	DESCRIPTION OF DISPOSITION
	Submit to P.S.I. for	MAKE 3-6 SPACING TO
	tech. justification and	4-6 SPACING. ADD 1" OF
	written disposition.	WELD TO EACH. ANY DISTORTION
	[signature] 1-6-97	WILL BE FIXED BY RANOR AT
		NO COST TO P.S.I.

TECHNICAL JUSTIFICATION: X BY RAY CIATTO /RCR DATE: 1/7/97

DISPOSITION: REWORK AS SHOWN BY [signature] DATE: 1/7/97

DISPOSITION OF NONCONFORMANCE:	RECOMMENDED DISPOSITION:	10CFR21 EVALUATION REQUIRED: ☐ YES ☒ NO
☐ ACCEPT AS IS ☐ USE AS IS	☐ ACCEPTED	CORRECTIVE ACTION REQUIRED: ☐ YES ☒ NO
☐ REPAIR /REWORK ☐ REJECT	☐ NOT ACCEPTED	CUSTOMER APPROVAL REQUIRED: ☒ YES ☐ NO
CONDITIONAL RELEASE: CR NO.		APPROVED BY DATE

APPROVAL OF DISPOSITION:		VERIFICATION OF DISPOSITION	
VP-ENGINEERING	DATE	ACCEPTED BY	DATE
QA MANAGER	DATE	QA MANAGER	DATE
ANI	DATE	ANI	DATE

tsubish. HC-8

For: Ranor

1/8-1/9/97

CONSULTING
Precision Laser Measurement Services

253 MILLER ROAD, BETHANY, CT 06524 • (203) 393-3344

AXIS	2 Runs ORIGINAL ACCURACY DATE: 1/9/97	ACCURACY AFTER COMPENSATION - 2 RUNS	6 Runs REPEATABILITY RUNS
X	-.002534" / +.026104" (.028638")	-.002195" / +.002331" (.004526")	-.002195" / +.002341" (.004536")
Y	-.000004" / +.005021" (.005025")	-.000818" / +.000087" (.000905")	-.001184" / +.000130" (.001314")
Z	-.002840" / +.000163" (.003003")	-.000242" / +.000416" (.000658")	-.000242" / +.000532" (.000774")
W	-.001184" / +.000026" (.001210")	-.000082" / +.000540" (.000622")	-.000147" / +.000540" (.000687")
U Table	-.000104" / +.018008" (.018112")	-0 / +.001301" (.001301")	-0 / +.001436" (.001436")
B	-3.0 Arc Sec / +.05 Arc Sec (3.05 Arc Sec)	-	

(39)

D.R.W.
CONSULTING
Precision Laser Measurement Services

253 MILLER ROAD • BETHANY, CT 06524 • (203) 393-3344

JANUARY13,199~7

RANOR, INC.
BELLA DR., PO BOX 458
WEST MINSTER, MA 01473
ATTENTION: PAUL WATTS

THIS CERTIFIES THAT THE FOLLOWING MACHINE TOOL HAS BEEN CALIBRATED BY D.R.W. CONSULTING IN COMPLIANCE WITH THE HEWLETT-PACKARD USER'S GUIDE FOR THE HP LASER SYSTEM, HP PART NO. 05528-90010 (PRINTED APRIL 1984); SECTION 6, DISTANCE MEASUREMENT.

MACHINE TOOL CALIBRATED

MITSUBISHI HC-8

THE CALIBRATION OF OUR INSTRUMENTS ARE TRACEABLE TO THE NATIONAL INSTITUTE OF STANDARDS AND TECHNOLOGY, AS REQUIRED; AND AS RECORDED ON THE APPROPRIATE CERTIFICATES OF CALIBRATION IDENTIFIED BELOW (NIST REFERENCES SHOWN WHERE APPLICABLE).

		INSTRUMENT CALIBRATION		
DESCRIPTION	SERIAL NUMBER	CALIBRATED	DATE DUE	NIST REFERENCE
AIR SENSOR MODEL #10751A	2452A00562	6/18/96	6/18/97	FS 25743
LASER HEAD MODEL #5518A	2532A01322	6/18/96	6/18/97	FS 25743
MATERIAL SENSOR	2415A00682	6/18/96	6/18/97	FS 25743
MATERIAL SENSOR	3216A00340	4/26/96	4/26/97	FS 25743
TRU-STONE SQUARE	23235	10/29/96	10/29/97	821/253616-94
ULTRADEX MODEL C-10755-1	1596	9/18/95	9/18/97	0297-930734

CERTIFICATION OF THE ABOVE MACHINE TOOLS IS SHOWN ON THE D.R.W. CONSULTING CERTIFICATE OF ACCURACY. ONE COPY THE CERTIFICATE OF ACCURACY IS ATTACHED TO THE CALIBRATED MACHINE TOOL, ADJACENT TO THE CALIBRATION LABEL; A SECOND COPY OF THE CERTIFICATE OF ACCURACY IS ATTACHED TO THE MACHINE TOOL CALIBRATION FOLDER.

IN THE EVENT THAT ANY DEVIATIONS ARE FOUND IN PREVIOUSLY REPORTED DATA; OR DEVIATIONS IN MEASUREMENT AND TEST EQUIPMENT OR STANDARDS USED TO DETERMINE REPORTED DATA IS FOUND, D.R.W CONSULTING SHALL NOTIFY RANOR, INC. IN WRITING OF THE SAME FOR EVALUATION TO 10 CFR PART 21

CERTIFIED BY: Mark Watts DATE: 01-13-97

VERIFIED CONTROLS & RECORDERS
50 Alma Street
Lowell, MA 01854
(508) 453-8241

Certificate of Calibration

Ranor, Inc.
Bella Drive; P.O. Box 458
Westminster, MA 01473

Attention: Quality Control Department

Purchase Order No. 47710

On 9-23-96, your instruments were checked against our Beckman Model Number 473, Serial Number 8110036, which was calibrated on 9-17-96, and is due again on 9-17-97. The calibration of our instrument is traceable to the National Institute of Standards and Technology. The Calibration Services provided under Ranor Purchase Order Number 47710 are supplied in compliance with Verified Controls and Recorders Procedure Number MICE-1, Revision 1 (6-18-87), Calibration of Measurement and Instrument Control Equipment as audited and accepted by Ranor, Inc. Your calibrated instruments currently have an overall error limit that is within the Manufacturer's Specifications. If an instrument was found to exceed the specified error limit, and adjusted and recalibrated; an asterik (*) will appear to the right of the error column. In the event that any deviations are found in previously reported data; or deviations in Measurement and Test Equipment or standards used to determine reported data is found, Verified Controls & Recorders shall notify Ranor, Inc. in writing of the same for evaluation in accordance with 10 CFR Part 21.

INSTRUMENT CALIBRATION

	INSTRUMENT DESCRIPTION	CALIBRATION SETTING	INSTRUMENT READING	ERROR (DEGREES)
Make/Model:	L&N Speedomax Recorder - Multipoint	100°F	99°F	-1°F
Serial No:	79-32765-5-1	1000°F	1000°F	-°F
Identification:	Ranor Serial No. 404	1900°F	1902°F	+2°F
Make/Model:	L&N Speedomax Recorder-W. Left	100°F	105°F	+5°F
Serial No:	E79-32765-1-1	1000°F	1000°F	-°F
Identification:	Ranor Serial No. 400	1900°F	1895°F	-5°F
Make/Model:	L&N Speedomax Recorder-W. Right	100°F	100°F	-°F
Serial No:	E79-32765-1-2	1000°F	1000°F	-°F
Identification:	Ranor Serial No. 401	1900°F	1897°F	-3°F
Make/Model:	Athena Model 2000-L Controller-E. Max Left	100°F	102°F	+2°F
Serial No:	750471 (*)	1000°F	1002°F	+2°F
Identification:	Ranor Serial No. 402	1900°F	1902°F	+2°F
Make/Model:	Athena Model 2000-L Controller-E. Max Right	100°F	104°F	+4°F
Serial No:	750472 (*)	1000°F	1005°F	+5°F
Identification:	Ranor Serial No. 403	1900°F	1904°F	+4°F
Make/Model:	Honeywell 12 Pt. Portable Recorder	100°F	100°F	-°F
Serial No:	---	1000°F	1000°F	-°F
Identification:	Ranor Serial No. 408	1900°F	1900°F	-°F

VERIFIED CONTROLS & RECORDERS
50 Alma Street
Lowell, MA 01854
(508) 453-8241

Certificate of Calibration

Ranor, Inc.
Bella Drive; P.O. Box 458
Westminster, MA 01473
Attention: Quality Control Department

Purchase Order No. 47710

INSTRUMENT CALIBRATION

	INSTRUMENT DESCRIPTION	CALIBRATION SETTING	INSTRUMENT READING	ERROR (DEGREES)
Make/Model:	Honeywell 24 Pt. Portable Recorder	100°F	100°F	-°F
Serial No:	T-HCR-1	1000°F	1000°F	-°F
Identification:	Ranor Serial No. 409	1900°F	1900°F	-°F
Make/Model:	Fluke Digital Thermometer	500°F	497°F	-3°F
Serial No:	5090029 ('K' Tc)	1000°F	996°F	-4°F
Identification:	Ranor Serial No. T-29	1900°F	1895°F	-5°F
Make/Model:	Fluke Digital Thermometer	500°F	499°F	-1°F
Serial No:	5500685 ('K' Tc)	1000°F	996°F	-4°F
Identification:	Ranor Serial No. T-85	1900°F	1892°F	-8°F
Make/Model:	Fluke Digital Thermometer	500°F	497°F	-3°F
Serial No:	5500687 ('K' Tc)	1000°F	996°F	-4°F
Identification:	Ranor Serial No. T-87	1900°F	1893°F	-7°F
Make/Model:	Fluke Digital Thermometer	500°F	498°F	-2°F
Serial No:	5500688 ('K' Tc)	1000°F	995°F	-5°F
Identification:	Ranor Serial No. T-88	1900°F	1896°F	-4°F

Signature:

Date: 9-23-96

PRODUCTION

ROUTING SHEET
--- SHOP COPY ---

Level 1
Unit 2

COMPANY: 1 RANOR, INC.

JOB/LOT NUMBER	JOB DESC.	PART NUMBER	PART DESCRIPTION	REV	- CODES - #	JOB USER	CUSTOMER P.O. N
7300FM	LIGO VACUMM CHAMBER	V049-4-101	PSI BEAM SPLITTER CHAMBERS				555822

LEVEL OF ASSY:	REV	PART NUMBER	PART DESCRIPTION	PROD QTY	START DATE	DUE DATE	PARENT LEVEI
1		V049-4-101 LEV 1	P.S.I. LOWER CHAMBER	15	1/07/97	2/14/97	

OPERATIONS:

SEQ	W/C	OPR	DESCRIPTION	DPT	PCS/ASY	OP. QTY	OVERLAP	S/U STD	PROD STD	PROD HRS	START	DUE	IN

THIS IS LEVEL 1. THIS LEVEL IS TO BE USED FOR THE FABRICATION OF THE LOWER SHELL ASSEMBLY PER DRAWING V049-4-003 SHEET# 1.

WELDING ON THIS JOB MUST BE DONE BY QUALIFIED WELDERS ONLY. WELDING WILL BE DONE BY GTAW AND PAW WELD PROCEDURES LISTED ON EACH OF THE WELD MAPS. ALL WELDS WILL BE 100% VISUALY INSPECTED.

NO AIR TOOLS CAN BE USED FOR PROCESSING THIS MATERIAL. USE ONLY ELECTRIC TOOLS. GRINDING IS ALLOWED PROVIDED THE GROUND EDGE IS CLEANED WITH A CARBIDE BURR. PLASMA EDGES MUST ALSO BE CLEANED WITH CARBIDE BURRS.

ALL MATERAILS ARE BEING SUPPLIED BY THE CUSTOMER.

MATERIAL: 304 L STAINLESS STEEL.

USE ONLY CLEAN CINCINNATI MILICRON CIMTECK 410 FOR MACHINE COOLANT.

USE ONLY " OAKITE " IMPRO -CLEAN 1300 FOR PRESSURE WASHING MATERIAL, FOLLOWED BY CLEAN STEAM.

REFER TO THE LEVELS BELOW FOR COMPONENT PART FABRICATION.

LEV 1A: LOWER SHELL
LEV 1B: LOWER HEAD (ITEM NO 1)
LEV 1C: MISC. ASSEMBLY PARTS. (see lev.1C B.O.M.)
LEV 1D: FLANGE ASSEMBLY MACHINING (items 9b,10, 11, 13)
LEV 1E: 60" LOWER SHELL PORTS.

SEQ	W/C	OPR	DESCRIPTION	DPT	PCS/ASY	OP. QTY	OVERLAP	S/U STD	PROD STD	PROD HRS	START	DUE	IN
10	EF1	010	LAY OUT	EF	1.00	15		.00		10.00	1/07/97	1/07/97	
15	AF1	400	Welding Assembly-Fitting	AS	1.00	15		.00		5.00	1/07/97	1/07/97	

INSTALL THE LOWER CYLINDER FIXTURE FOR THE FOLLOWING OPERATION.

INSTALL THE MODIFIED CUSTOMER SPIDERS IN THE LOWER

COMPANY: 1 RANOR, INC.

JOB/LOT NUMBER	JOB DESC.	PART NUMBER	PART DESCRIPTION	REV	- CODES - # JOB USER	CUSTOMER P.O.
7300FM	LIGO VACUMM CHAMBER	V049-4-101	PSI BEAM SPLITTER CHAMBERS			555822

LEVEL OF ASSY:	REV	PART NUMBER	PART DESCRIPTION	PROD QTY	START DATE	DUE DATE	PARENT LEVEL
1		V049-4-101 LEV 1	P.S.I. LOWER CHAMBER	15	1/07/97	2/14/97	

OPERATIONS:

SEQ	W/C	OPR	DESCRIPTION	DPT	PCS/ASY	OP. QTY	OVERLAP	S/U	STD	PROD STD	PROD HRS	START	DUE	IN

CYLINDER AND REROUND TO WITHIN 1/8".

CHECK ROUNDNESS BY SI DATE 10/16/96

USING THE UPPER FIXTURE, REROUND THE TOP OF THE LOWER CYLINDER TO WITHIN 1/8".

CHECK ROUNDNESS BY SE DATE 10/16/96

FITUP PT# 1 (LOWER HEAD) TO PT# 3 (LOWER SHELL).
SEE DWG# V049-4-003 SHEET# 1 DETAIL: 3.

USING THE MODIFIED SPIDER, REROUND THE LOWER CYLINDER HEAD TO FIT THE LOWER CYLINDER.

BY SE DATE 10/17/96

FORMAN TO CHECK FITUP BY JoB DATE 10/17/96

20	QC2	573	Visual Inspection	QC	1.00	15		.00			1.00	1/07/97	1/07/97	

INSPECTION OF THE CYLINDER TO THE HEAD FITUP IS REQUIRED.

INSPECTION OF THE ROUNDNESS IS REQUIRED. ROUNDNESS W/IN 1/8

INSPECTED BY: (RANOR Q.C.) DS DATE: 10-17-96

INSPECTED BY: (P.S.I.) [signature] DATE 11-22-96

REFERENCE P.S.I. QUALITY PLAN SEQ I

25	WE1	466	WELDING SEQUENCE.	WE	1.00	15		.00			16.00	1/07/97	1/08/97	

WELD THE HEAD TO CYLINDER COMPLETE PER THE DRAWING AND THE WELD MAPS.
READ ALL WELDING NOTES ON THE WELD MAPS.

USE ONLY APPROPRATE WELDING PROCEDURE LISTED ON THE WELD MAP

COMPLETE THE WELD MAPS.
NOTIFY QC FOR THE VT INSPECTION OF THE WELDS.

PROG: JC41[illegible] **PRODUCTION** ROUTING SHEET PAGE: 4
USER: DRB --- SHOP COPY --- DATE: 10/1[illegible]
TIME: 11.5[illegible]

COMPANY: 1 RANOR, INC.

JOB/LOT NUMBER	JOB DESC.	PART NUMBER	PART DESCRIPTION	- CODES - REV #	JOB USER	CUSTOMER P.O. N
7300FM	LIGO VACUMM CHAMBER	V049-4-101	PSI BEAM SPLITTER CHAMBERS			555822

LEVEL OF ASSY:	REV	PART NUMBER	PART DESCRIPTION	PROD QTY	START DATE	DUE DATE	PARENT LEVEI
1		V049-4-101 LEV 1	P.S.I. LOWER CHAMBER	15	1/07/97	2/14/97	

OPERATIONS:

SEQ	W/C	OPR	DESCRIPTION	DPT	PCS/ASY	OP. QTY	OVERLAP	S/U STD	PROD STD	PROD HRS	START	DUE	IN

BY JeB DATE 10/18/96

CHECK WELDS BY FS DATE 10/18/96

30 QC2 573 Visual Inspection QC 1.00 15 .00 2.00 1/08/97 1/08/97

100% VISUAL INSPECTION OF THE WELDS IS REQUIRED.

COMPLETE VISUAL INSPECTION REPORT.

INSPECTED BY: (RANOR Q.C.) FS DATE: 10/18/96

REFERENCE P.S.I. QUALITY PLAN SEQ. I

35 AF1 250 ROUNDNESS INSPECTION. AS 1.00 15 .00 4.00 1/08/97 1/09/97

THIS SEQUENCE IS TO BE USED FOR CHECKING THE ROUNDNESS OF THE LOWER CYLINDER SUBASSEMBLY.

CHECK ROUNDNESS. ROUND WITHIN 1/8".
CHECKED BY SE DATE 11/22/96

REROUND THE SUBASSEMBLY TO WITHIN 1/8".

BY SE DATE 11/22/96

60 AF1 400 Welding Assembly-Fitting AS 1.00 15 .00 15.00 1/09/97 1/10/97

INSTALL THE 60" PORT FIXTURES ON THE I.D. OF THE CYLINDER.

TRIAL FIT THE 60" DIA. PORTS TO EACH OF THE LOCATIONS.
INSPECT THE FITUP ON EACH OF THE PORTS.

CUT-OUT 59 1/2" ROUGH OPENINGS, & RE-CHECK THE FIT-UP OF AT LEAST ONE OF THE 60" DIA PORT.

BY: SE DATE: 11/23/96

********** SEND TO THE MACHINE SHOP **********
SEND THE CYLINDER ASSEMBLY TO THE MACHINE SHOP.

PRODUCTION

ROUTING SHEET
--- SHOP COPY ---

COMPANY: 1 RANOR, INC.

JOB/LOT NUMBER	JOB DESC.	PART NUMBER	PART DESCRIPTION	- CODES - REV #	JOB USER	CUSTOMER P.O. N
7300FM	LIGO VACUMM CHAMBER	V049-4-101	PSI BEAM SPLITTER CHAMBERS			555822

LEVEL OF ASSY: 1 REV	PART NUMBER	PART DESCRIPTION	PROD QTY	START DATE	DUE DATE	PARENT LEVEI
	V049-4-101 LEV 1	P.S.I. LOWER CHAMBER	15	1/07/97	2/14/97	

OPERATIONS:

SEQ	W/C	OPR	DESCRIPTION	DPT	PCS/ASY	OP. QTY	OVERLAP	S/U	STD	PROD STD	PROD HRS	START	DUE	IN
70	EM1	600	Programming	EM	1.00	15			.00		8.00	1/10/97	1/10/97	

PROGRAM TO MACHINE THE 60" PORT OPENINGS, 1/2" EXTRA STOCK HAS BEEN ALLOWED ON THE I.D. FOR MACHINING.

LAYOUT ON THE MACHINE THE 1/2" EXTRA STOCK ON THE TOP FLANGE END, AND THE LOCATION (center line) OF THE OUTSIDE ATTACHMENTS.

BY_____ DATE_____

75	HC8	615	Machine per print	HB	1.00	15			.00		20.00	1/10/97	1/13/97	

MACHINE THE 60" PORT LOCATIONS PER THE MACHINE SHOP OPERATIONS SHEET AND INSTRUCTIONS. MACHINE THIS FEATURE TO SIZE PER DRAWING (60.50" DIA.)

LAYOUT ALL OUTSIDE ATTACHEMENTS AND THE EXTRA STOCK ON THE TOP SURFACE OF THE SHELL.
FEATURES TO INCLUDE:

- THE CENTER LINE AND CORNERS OF THE 4 STAND MOUNTING PADS, ITEM 20.

SCRIBE LAYOUT LINES APPROX. 3/8" LONG WITH CARBIDE AT 4 LOCATIONS 0, 90, 180, 270 DEG. FOR THE 60" PORTS.

BY DP DATE 11/19/96

80	DE1	770	Deburring	DE	1.00	15			.00		4.00	1/13/97	1/13/97	

DEBURR EDGES, DO NOT ROUND OVER OR HEAVY CHAMFER

USE ONLY ELECTRIC TOOLS WITH CARBIDE BURRS FOR DEBURRING.

BY: R.O. DATE: 11-19-96

85	QC3	585	Dimensional Inspection	QC	1.00	15			.00		4.00	1/13/97	1/14/97	

DIMENSIONAL INSPECTION OF THE FOLLOWING ITEMS IS REQUIRED:

INSPECT THE 60"PORT LOCATIONS PER DWG# V049-4-003.

PROG: JC4100 **PRODUCTION** ROUTING SHEET PAGE: 6
USER: DRB --- SHOP COPY --- DATE: 10/16
TIME: 11.52

COMPANY: 1 RANOR, INC.

JOB/LOT NUMBER	JOB DESC.	PART NUMBER	PART DESCRIPTION	REV	- CODES - # JOB USER	CUSTOMER P.O. N
7300FM	LIGO VACUMM CHAMBER	V049-4-101	PSI BEAM SPLITTER CHAMBERS			555822

LEVEL OF ASSY:	REV	PART NUMBER	PART DESCRIPTION	PROD QTY	START DATE	DUE DATE	PARENT LEVEI
1		V049-4-101 LEV 1	P.S.I. LOWER CHAMBER	15	1/07/97	2/14/97	

OPERATIONS:

SEQ	W/C	OPR	DESCRIPTION	DPT	PCS/ASY	OP. QTY	OVERLAP	S/U STD	PROD STD	PROD HRS	START	DUE	IN

INSPECT THE LAYOUT LOCATIONS FOR THE SUPPORT PAD LOCATIONS.

INSPECT THE EXTRA STOCK LAYOUT ON THE TOP OF THE SHELL. +.25

INSPECTED BY: (RANOR Q.C.) _____ DATE: 11-19-96

REFERENCE P.S.I. QUALITY PLAN SEQ. L

********** SEND TO THE FAB SHOP **********

90 FN1 500 STEAM CLEANING FN 1.00 15 .00 2.00 1/14/97 1/14/97

STEAM CLEAN WITH " OAKITE " IMPRO-CLEAN 1300 AND FOLLOW WITH PURE STEAM.

BY: _____ DATE: 11/25/96

95 AF1 400 Welding Assembly-Fitting AS 1.00 15 .00 20.00 1/14/97 1/15/97

INSPECT THE ROUNDNESS OF THE CYLINDER ASSEMBLY. ROUNDNESS MUST BE WITHIN 1/8".

CHECK ROUNDNESS BY SI DATE 11/25/96

FITUP PART# 12 (60" PORTS) TO THE LOWER SHELL. BRACE AND FIXTURE THE ASSEMBLY AS REQUIRED FOR WELDING. SEE DWG# V049-4-003, SHEET# 1 DETAIL: 3.

NOTE: HAVE THE LOCATIONS BEHIND PT# 16 (STIFFINING RING) WELDED.

FITUP AND TACK PART# 16 (STIFFINING RING) TO THE SHELL SUBASSEMBLY.

FITUP AND TACK PART# 15 (SHELL STIFFINER) TO THE SHELL.

FITUP AND TACK THE SUPPORT PAD SUBASSEMBLIES (PT# 20 & 55) TO THE SHELL. SEE DWG# V049-4-101 FOR THE FITUP DIMENSIONS.

NOTE: THE OUTSIDE OF THE SHELL HAS BEEN SCRIBED FOR THE LOCATIONS OF THE PARTS.

PROG: JC4100 **PRODUCTION** ROUTING SHEET PAGE: 6-19
USER: DRB --- SHOP COPY --- DATE: 10/16
TIME: 11.52

COMPANY: 1 RANOR, INC.

JOB/LOT NUMBER	JOB DESC.	PART NUMBER	PART DESCRIPTION	- CODES - REV # JOB USER	CUSTOMER P.O.
7300FM	LIGO VACUMM CHAMBER	V049-4-101	PSI BEAM SPLITTER CHAMBERS		555822

LEVEL OF ASSY:	REV	PART NUMBER	PART DESCRIPTION	PROD QTY	START DATE	DUE DATE	PARENT LEVEL
1		V049-4-101 LEV 1	P.S.I. LOWER CHAMBER	15	1/07/97	2/14/97	

OPERATIONS:

SEQ	W/C	OPR	DESCRIPTION	DPT	PCS/ASY	OP. QTY	OVERLAP	S/U	STD	PROD STD	PROD HRS	START	DUE	IN
			BY_____ DATE_____											
			FORMAN TO CHECK FITUP BY JAB DATE 11-25-96											
100	WE1	466	GTAW-SS / PAW	WE	1.00	15		.00			40.00	1/15/97	1/17/97	
			WELD THE SHELL SUBASSEMBLY COMPLETE PER THE DRAWING AND THE WELD MAPS. COMPLETE EACH OF THE WELD MAPS.											
			READ ALL NOTES ON THE WELD MAPS.											
			NOTIFY QC FOR THE VISUAL INSPECTION OF THE WELDS.											
			BY JAB DATE 12/6/96											
105	QC2	585	VISUAL INSPECTION.	QC	1.00	15		.00			10.00	1/17/97	1/20/97	
			100% VISUAL INSPECTION OF THE WELDED LOWER SHELL SUBASSEMBLY											
			COMPLETE THE VISUAL INSPECTION REPORT.											
			INSPECTED BY: (RANOR Q.C.) [signature] DATE: 12-6-96											
			INSPECTED BY: (P.S.I.) [signature] DATE 1-22-96											
110	AF1	400	Welding Assembly-Fitting	AS	1.00	15		.00			12.00	1/20/97	1/20/97	
			REMOVE THE UPPER SHELL REROUNDING FIXTURE.											
			FITUP AND TACK THE FOLLOWING INTERNAL PARTS:											
			12 PC'S PART# 21B (UPPER INTERNAL ATTACHMENT BRACKETS).											
			12 PC'S PART# 21A (LOWER INTERNAL ATTACHMENT BRACKETS).											
			4 PC'S PART# 22 (PLATFORM ATTACHMENT PLATES).											
			18 PC'S PART# 52 (INTERNAL SUPPORT RING BRACKETS).											
			2 PC'S PART# 51 (PLATFORM SUPPORT RING).											

PRODUCTION

ROUTING SHEET
--- SHOP COPY ---

COMPANY: 1 RANOR, INC.

JOB/LOT NUMBER	JOB DESC.	PART NUMBER	PART DESCRIPTION	REV	- CODES - #	JOB USER	CUSTOMER P.O. N
7300FM	LIGO VACUMM CHAMBER	V049-4-101	PSI BEAM SPLITTER CHAMBERS				555822

LEVEL OF ASSY:	REV	PART NUMBER	PART DESCRIPTION	PROD QTY	START DATE	DUE DATE	PARENT LEVEI
1		V049-4-101 LEV 1	P.S.I. LOWER CHAMBER	15	1/07/97	2/14/97	

OPERATIONS:

SEQ	W/C	OPR	DESCRIPTION	DPT	PCS/ASY	OP. QTY	OVERLAP	S/U	STD	PROD STD	PROD HRS	START	DUE	IN
			BY SI DATE 1/13/97											
			FORMAN TO CHECK FITUP BY JaB DATE 1-13-97											
115	WE1	466	WELDING SEQUENCE.	WE	1.00		15		.00		30.00	1/21/97	1/22/97	
			WELD THE INTERNAL PARTS COMPLETE PER THE WELD MAPS AND THE DRAWING.											
			SIGN OFF EACH OF THE WELD MAPS. READ ALL NOTES ON THE WELD MAPS.											
			BY: P DATE: 1-13-97											
120	QC2	573	Visual Inspection	QC	1.00		15		.00		4.00	1/22/97	1/22/97	
			100% VISUAL INSPECTION OF ALL INTERNAL WELDS IS REQUIRED. COMPLETE THE VISUAL INSPECTION REPORT.											
			INSPECTED BY: (RANOR Q.C.) 1-15-97 DATE: 1-15-97											
			REF. P.S.I. QUALITY PLAN SEQ. Q.											
130	FN1	500	SPOT PASSIVATE	FN	1.00		15		.00		8.00	1/22/97	1/23/97	
			READ THE MANUFACTURERS TECK DATA SHEETS 1 THRU 4 PRIOR TO APPLYING SOLUTION. USE APPROPRIATE MATERIAL HANDLING AND PROTECTIVE GEAR WHILE USING THE SOLUTION.											
			SPOT PASSIVAT THE I.D. USING CAL- CLEAN 76-2x											
			APPLY PER MANUFACTURERS INSTRUCTIONS. APPLY TO RUSTED AREAS ONLY.											
			SAFETY EQUIPMENT TO INCLUDE THE FOLLOWING:											
			ACID/CHEMICAL GOGGLES GLOVES FACE SHIELD DISPOSABLE BUG SPRAYER											
			BY: JB DATE: 12-6-96											
133	AF1	400	ROUNDNESS INSPECTION.	AS	1.00		15		.00		2.00	1/23/97	1/23/97	

COMPANY: 1 RANOR, INC.

JOB/LOT NUMBER	JOB DESC.	PART NUMBER	PART DESCRIPTION	REV	- CODES - # JOB	USER	CUSTOMER P.O. N
7300FM	LIGO VACUMM CHAMBER	V049-4-101	PSI BEAM SPLITTER CHAMBERS				555822

LEVEL OF ASSY:	REV	PART NUMBER	PART DESCRIPTION	PROD QTY	START DATE	DUE DATE	PARENT LEVEI
1		V049-4-101 LEV 1	P.S.I. LOWER CHAMBER	15	1/07/97	2/14/97	

OPERATIONS:

SEQ	W/C	OPR	DESCRIPTION	DPT	PCS/ASY	OP. QTY	OVERLAP	S/U STD	PROD STD	PROD HRS	START	DUE	IN

INSPECTION OF THE ROUNDNESS ON THE LOWER SHELL ASSEMBLY IS REQUIRED BEFORE STRESS RELIEVING.

ROUNDNESS OF THE SHELL IS TO BE WITHIN 1/8".

BY JAB DATE 12-6-96

135 FN1 500 STEAM CLEANING — FN 1.00 15 .00 4.00 1/23/97 1/23/97

STEAM CLEAN PER P.S.I. PROCEDURE # 049-2-046, step 4.1

BY: JAB DATE: 12-6-96

140 OV1 546 Thermocouple Stress Cycle — FN 1.00 15 .00 12.00 1/23/97 1/24/97

STRESS RELIEVE THE LOWER SHELL IN THE NEUTRAL POSITION (standing up) WITH BAFFLES TO PROTECT FROM ANY DIRECT FLAME BURNERS. NO LOCALLIZED HOT SPOTS.

HEAT THE VESSEL AT A RATE OF 100 DER. F. PER HOUR ABOVE 350 DEG. F. UP TO 1000 DEG. F. +/-50 DEG. HOLD FOR 4 HOURS. COOL AT A RATE OF 100 DEG. F. PER HOUR TO 300 DEG. F. BEFORE REMOVING FROM THE FURNACE.

NOTE: THERMOCOUPLES REQUIRED FOR THE ENTIRE CYCLE PER STEP 4.2

BY: [illegible] DATE: 12-6-96

143 AF1 400 Welding Assembly-Fitting — AS 1.00 15 .00 2.00 1/24/97 1/24/97

INSTALL THE LOWER CYLINDER REROUNDING FIXTURE.
NOTE THE TIMING OF THE FIXTURE TO THE PORT LOCATIONS.

ADJUST THE FIXTURE AND TIGHTEN AS REQUIRED FOR MACHINING.

BY JAB DATE 12/18/96

********** SEND TO THE MACHINE SHOP **********

145 HC8 615 Machine per print — HB 1.00 15 .00 40.00 1/24/97 1/28/97

PROG: JC41[illegible]

USER: DRB

PRODUCTION

ROUTING SHEET

--- SHOP COPY ---

9-14

PAGE: 1[illegible]
DATE: 10/1[illegible]
TIME: 11.5[illegible]

COMPANY: 1 RANOR, INC.

JOB/LOT NUMBER	JOB DESC.	PART NUMBER	PART DESCRIPTION	- CODES - REV #	JOB USER	CUSTOMER P.O. N
7300FM	LIGO VACUMM CHAMBER	V049-4-101	PSI BEAM SPLITTER CHAMBERS			555822

LEVEL OF ASSY:	REV	PART NUMBER	PART DESCRIPTION	PROD QTY	START DATE	DUE DATE	PARENT LEVEI
1		V049-4-101 LEV 1	P.S.I. LOWER CHAMBER	15	1/07/97	2/14/97	

OPERATIONS:

SEQ	W/C	OPR	DESCRIPTION	DPT	PCS/ASY	OP. QTY	OVERLAP	S/U STD	PROD STD	PROD HRS	START	DUE	IN

LAYOUT, & MACHINE ALL NON CRITICAL PORTS, PARTS 9,10 & 11
(REF. PORTS E,F & G).
NOTE: DO NOT MACHINE PART# 13 (D-PORT) LOCATIONS.

NOTIFY QC FOR A DIMENSIONAL INSPECTION OF THE PREMACHINING.
VERIFY CENTERLENES, AND THE EXTRA STOCK TO MACHINE THE
TOP OF THE CYLINDER FOR THE LARGE FLANGE.

LAYOUT & SCRIBE WITH CARBIDE 4 LOCATIONS 3/8" LONG AT
EACH OF THE PORTS AT 0, 90, 180, & 270 DEG.

BY: [illegible] DATE: 1-7-97

150 QC3 585 Dimensional Inspection — QC 1.00 15 .00 2.00 1/28/97 1/29/97

INSPECT MACHINED PORT FEATURES AND THE SCRIBE LOCATIONS.

INSPECTED BY: (RANOR Q.C.) [illegible] DATE: 1-7-97 "E" PORTS ON THE LOW 14.03 TYP OK. J.B.

REFER TO P.S.I. QUALITY PLAN SEQ. Q

********** SEND TO THE FAB SHOP **********

155 FN1 500 STEAM CLEANING — FN 1.00 15 .00 3.00 1/29/97 1/29/97

STEAM CLEAN USING "OAKITE 1300 THEN FOLLOWED BY STEAM ONLY.

BY: [illegible] DATE: 1-8-97

160 AF1 400 Welding Assembly-Fitting — AS 1.00 15 .00 10.00 1/29/97 1/29/97

FITUP AND TACK PART# 9,10 & 11 (REF. E,F & G PORTS) TO THE
LOWER SHELL SUBASSEMBLY.
SEE DWG# V049-4-003, SHEET:1, DETAIL:2

BY: [illegible] DATE: 1/13/97

FORMAN TO CHECK FITUP BY JAB DATE 1-13-97

165 WE1 466 WELDING SEQUENCE. — WE 1.00 15 .00 20.00 1/29/97 1/31/97

PROG: JC410U **PRODUCTION** ROUTING SHEET --- SHOP COPY ---

USER: DRB

COMPANY: 1 RANOR, INC.

JOB/LOT NUMBER	JOB DESC.	PART NUMBER	PART DESCRIPTION	REV	- CODES - # JOB USER	CUSTOMER P.O. N
7300FM	LIGO VACUMM CHAMBER	V049-4-101	PSI BEAM SPLITTER CHAMBERS			555822

LEVEL OF ASSY:	REV	PART NUMBER	PART DESCRIPTION	PROD QTY	START DATE	DUE DATE	PARENT LEVEI
1		V049-4-101 LEV 1	P.S.I. LOWER CHAMBER	15	1/07/97	2/14/97	

OPERATIONS:

SEQ	W/C	OPR	DESCRIPTION	DPT	PCS/ASY	OP. QTY	OVERLAP	S/U STD	PROD STD	PROD HRS	START	DUE	IN
			WELD ALL NON CRITICAL PORTS, PART# 9,10 & 11 (REF.E,F & G PORTS) PER THE DRAWING AND WELD MAPS.										
			COMPLETE THE WELD MAPS. READ ALL NOTES ON THE WELD MAPS.										
			BY: P DATE: 1/13/97										
170	QC2	573	Visual Inspection	QC	1.00	15		.00		6.00	1/31/97	1/31/97	
			INSPECT WELDING OF PART# 9,10 & 11 (E,F & G PORTS). 100% VISUAL INSPECTION OF THE WELDS IS REQUIRED. COMPLETE THE VISUAL INSPECTION REPORTS.										
			INSPECTED BY: (RANOR Q.C.) DATE: 1-13-97										
			REFERENCE P.S.I. QUALITY PLAN SEQUENCE R										
175	FN1	500	STEAM CLEANING	FN	1.00	15		.00		4.00	1/31/97	1/31/97	
			STEAM CLEAN USING OAKITE 1300 THEN STEAM ONLY										
			BY: DB DATE: 1-14-97										
			********** SEND TO THE MACHINE SHOP **********										
180	HC8	615	Machine per print	HB	1.00	15		.00		20.00	1/31/97	2/03/97	
			SET-UP PART TO MACHINE THE ENDS OF THE 60" NOZZLES SQUARE.										
			LAYOUT AND MACHINE THE EXTRA STOCK ON THE TOP OF THE CYLINDER SHELL SUBASSEMBLY FOR THE LARGE FLANGE FITUP.										
			MACHINE THE FOUR CRITICAL "D" PORT LOCATIONS (PT# 13).										
			BY: DP DATE: 1/16/97										
			********** SEND TO THE FAB SHOP **********										
185	QC3	585	Dimensional Inspection	QC	1.00	15		.00		60.00	2/03/97	2/07/97	
			INSPECT THE 60" NOZZLE MACHINING, & TOP WELD PREP.										

PROG: JC41[illegible] **PRODUCTION** ROUTING SHEET --- SHOP COPY ---

USER: DRB

COMPANY: 1 RANOR, INC.

JOB/LOT NUMBER	JOB DESC.	PART NUMBER	PART DESCRIPTION	- CODES - REV #	JOB USER	CUSTOMER P.O. N
7300FM	LIGO VACUMM CHAMBER	V049-4-101	PSI BEAM SPLITTER CHAMBERS			555822

LEVEL OF ASSY: 1 REV	PART NUMBER	PART DESCRIPTION	PROD QTY	START DATE	DUE DATE	PARENT LEVEI
	V049-4-101 LEV 1	P.S.I. LOWER CHAMBER	15	1/07/97	2/14/97	

OPERATIONS:

SEQ	W/C	OPR	DESCRIPTION	DPT	PCS/ASY	OP. QTY	OVERLAP	S/U STD	PROD STD	PROD HRS	START	DUE	IN
			INSPECTED BY: (RANOR Q.C.) Fred Hall DATE: 1-17-97										
			INSPECTED BY: (P.S.I.) PEF/GS DATE 1/17/97										
			REFERENCE P.S.I. QUALITY PLAN SEQ. T										
			INSPECT THE LOCATION OF 4 "D" PORTS.										
			INSPECTED BY: (RANOR Q.C.) Fred Hall DATE: 1-17-97										
			INSPECTED BY: (P.S.I.) PEF/GS. DATE 1/17/97										
			REF. P.S.I. QUALITY PLAN SEQUENCE NO. U										
190	FN1	500	STEAM CLEANING	FN	1.00	15		.00		4.00	2/07/97	2/07/97	
			STEAM CLEAN USING OAKITE 1300 , THEN STEAM ONLY.										
			BY: [illegible] DATE: 1/17/97										
195	AF1	400	Welding Assembly-Fitting	AS	1.00	15		.00		6.00	2/07/97	2/07/97	
			FIT-UP , & FIXTURE THE LOWER SHELL FOR FLANGE ATTACHMENT.										
			NOTE: BOTH UPPER, & LOWER FLANGES WILL BE USED FOR FOR ALIGNMENT, AND RIDIGITY.										
			BY: SE DATE: 1/17/97										
200	QC2	585	Dimensional Inspection	QC	1.00	15		.00		2.00	2/07/97	2/07/97	
			INSPECT THE FIT-UP OF THE UPPER, & LOWER FLANGES TO SHELL.										
			INSPECTED BY: (RANOR Q.C.) Fred Hall DATE: 1-17-97										
			INSPECTED BY: (P.S.I.) [illegible] DATE 2-6-97										
			REF. P.S.I. QUALITY PLAN SEQ. W.										
205	WE1	466	WELDING SEQUENCE.	WE	1.00	15		.00		10.00	2/10/97	2/10/97	

PROG: JC4100 **PRODUCTION** ROUTING SHEET --- SHOP COPY --- PAGE: 13
USER: DRB DATE: 10/16
TIME: 11.52

COMPANY: 1 RANOR, INC.

JOB/LOT NUMBER	JOB DESC.	PART NUMBER	PART DESCRIPTION	REV	- CODES - # JOB USER	CUSTOMER P.O. N
7300FM	LIGO VACUMM CHAMBER	V049-4-101	PSI BEAM SPLITTER CHAMBERS			555822

LEVEL OF ASSY:	REV	PART NUMBER	PART DESCRIPTION	PROD QTY	START DATE	DUE DATE	PARENT LEVEI
1		V049-4-101 LEV 1	P.S.I. LOWER CHAMBER	15	1/07/97	2/14/97	

OPERATIONS:

SEQ	W/C	OPR	DESCRIPTION	DPT	PCS/ASY	OP. QTY	OVERLAP	S/U STD	PROD STD	PROD HRS	START	DUE	IN

WELD THE UPPER , AND LOWER FLANGES TO THE SHELLS PER DWG.
AND WELD MAPS. REF. WELD MAP SHEET #9

READ ALL NOTES ON THE WELD MAPS.
COMPLETE THE WELD MAPS.

BY_____ DATE_____

210 QC2 573 Visual Inspection QC 1.00 15 .00 1.00 2/10/97 2/10/97

INSPECT LOWER SHELL TO FLANGE WELDS
100% VISUAL INSPECTION OF THE FLANGE WELDS IS REQUIRED.

COMPLETE THE VISUAL INSPECTION REPORT.

INSPECTED BY: (RANOR Q.C.) Fred Schall DATE: 1-21-97

INSPECTED BY: (P.S.I.) Dave Sweeney DATE 2-5-97

REFERENCE P.S.I. QUALITY PLAN SEQ. X

215 AF1 400 Welding Assembly-Fitting AS 1.00 15 .00 8.00 2/10/97 2/11/97

FIT-UP THE 60" WELD FLANGES PER DRAWING SHEET 1
USE A STRONGBACK FIXTURE BOLTED TO THE FLANGE FOR
REINFORCEMENT WITH 1/8" ALUMINUM SHIMS BOLTED IN
BETWEEN. (this will prevent arcing of the finish surfaces)

BY: SI DATE: 1/16/97

220 WE1 466 WELDING SEQUENCE. WE 1.00 15 .00 16.00 2/11/97 2/11/97

WELD THE 60" FLANGES TO NOZZLES, PER DRAWING SHEET 1.
READ ALL NOTES ON THE WELD MAP.
COMPLETE THE WELD MAPS.

BY_____ DATE_____

225 QC2 573 Visual Inspection QC 1.00 15 .00 4.00 2/12/97 2/12/97

INSPECT THE 60" FLANGE TO SHELL WELDS
100% VISUAL INSPECTION OF THE 60" FLANGE WELDS IS REQUIRED.

PROG: JC41[illegible]

USER: DRB

PRODUCTION

ROUTING SHEET

--- SHOP COPY ---

COMPANY: 1 RANOR, INC.

JOB/LOT NUMBER	JOB DESC.	PART NUMBER	PART DESCRIPTION	- CODES - REV # JOB USER	CUSTOMER P.O. N
7300FM	LIGO VACUMM CHAMBER	V049-4-101	PSI BEAM SPLITTER CHAMBERS		555822

LEVEL OF ASSY:	REV	PART NUMBER	PART DESCRIPTION	PROD QTY	START DATE	DUE DATE	PARENT LEVEL
1		V049-4-101 LEV 1	P.S.I. LOWER CHAMBER	15	1/07/97	2/14/97	

OPERATIONS:

SEQ	W/C	OPR	DESCRIPTION	DPT	PCS/ASY	OP. QTY	OVERLAP	S/U STD	PROD STD	PROD HRS	START	DUE	IN

COMPLETE THE VISUAL INSPECTION REPORT.

INSPECTED BY: (RANOR Q.C.) Fred Stoll DATE: 1-21-97

INSPECTED BY: (P.S.I.) Dave Seneca DATE 2-5-97

REF. P.S.I. QUALITY PLAN SEQ. Y

230 AF1 400 Welding Assembly-Fitting AS 1.00 15 .00 12.00 2/12/97 2/12/97

FITUP PART# 13 (D-PORTS) USING THE ASSEMBLY FIXTURE PER DWG# V049-4-003 DEATIL: 2.

QC IS TO VERIFY THE LOCATIONS.
NOTIFY QC TO INSPECT THE LOCATIONS.

QC INSPECTION- BY [illegible] DATE 1-22-97

BY SE DATE 1/22/97

235 WE1 466 WELDING SEQUENCE. WE 1.00 15 .00 15.00 2/12/97 2/13/97

WELD PART# 13 (D-PORTS) COMPLETE PER THE DRAWING AND THE WELD MAPS.
READ ALL NOTES ON THE WELD MAPS.
COMPLETE THE WELD MAPS.

BY R.P.L. DATE 1-22-97

240 QC3 585 VISUAL INSPECTION. QC 1.00 15 .00 4.00 2/13/97 2/14/97

100% VISUAL INSPECTION OF PT# 13 (D-PORT) WELD IS REQUIRED.

COMPLETE THE VISUAL INSPECTION REPORT.

INSPECTED BY: (RANOR Q.C.) [illegible] DATE: 1-24-97

INSPECTED BY: (P.S.I.) Dave Seneca DATE 2-5-97

REF. P.S.I. QUALITY PLAN SEQ. BB.

PROG: JC41[illegible]

USER: DRB

PRODUCTION

ROUTING SHEET

--- SHOP COPY ---

COMPANY: 1 RANOR, INC.

JOB/LOT NUMBER	JOB DESC.	PART NUMBER	PART DESCRIPTION	- CODES - REV # JOB USER	CUSTOMER P.O. N
7300FM	LIGO VACUMM CHAMBER	V049-4-101	PSI BEAM SPLITTER CHAMBERS		555822

LEVEL OF ASSY:	REV	PART NUMBER	PART DESCRIPTION	PROD QTY	START DATE	DUE DATE	PARENT LEVEI
1		V049-4-101 LEV 1	P.S.I. LOWER CHAMBER	15	1/07/97	2/14/97	

OPERATIONS:

SEQ	W/C	OPR	DESCRIPTION	DPT	PCS/ASY	OP. QTY	OVERLAP	S/U	STD	PROD STD	PROD HRS	START	DUE	IN
260	FN1	500	STEAM CLEANING	FN	1.00	15			.00		6.00	2/14/97	2/14/97	

STEAM CLEAN USING oakite 1300 FOLLOWED BY CLEAN STEAM.

BY: GB DATE: 1-25-97

265	QC3	585	Dimensional Inspection	QC	1.00	15			.00		10.00	2/14/97	2/14/97	

FINAL INSPECTION TO BE PERFORMED ON A NC MACHINE.

INSPECT FINAL WELDED ASSEMBLY, CHECK WELDS, CRITICAL PORT DIMENSIONS, & FLATNESS.

INSPECTED BY: (RANOR Q.C.) [signature] DATE: 2.5.97

INSPECTED BY: (P.S.I.) [signature] DATE 2-6-97

REF. P.S.I. QUALITY PLAN SEQ. BB.

NEXT LEVEL OF ASSEMBLY: PARENT LEVEL

PROG: JC4100

USER: DRB

ROUTING SHEET

--- SHOP COPY ---

Level 1A

Units 1 - 5

PAGE: 2
DATE: 10/01
TIME: 14.47

COMPANY: 1 RANOR, INC.

JOB/LOT NUMBER	JOB DESC.	PART NUMBER	PART DESCRIPTION	- CODES - REV # JOB USER	CUSTOMER P.O.
7300FM	LIGO VACUMM CHAMBER	V049-4-101	PSI BEAM SPLITTER CHAMBERS		555822

LEVEL OF ASSY: 1A	REV	PART NUMBER	PART DESCRIPTION	PROD QTY	START DATE	DUE DATE	PARENT LEVEL
		V049-4-101 LEV 1A	P.S.I. BOTTOM SHELL	15	9/09/96	2/14/97	

OPERATIONS:

SEQ	W/C	OPR	DESCRIPTION	DPT	PCS/ASY	OP. QTY	OVERLAP	S/U STD	PROD STD	PROD HRS	START	DUE	IN

.
THIS LEVEL 1A, IS FOR THE LOWER VESSEL SHELL.
.
REFERENCE DRAWING V049-4-101, AND V049-4-003
.
MATERIAL 304 L STAINLESS STEEL, FURNISHED BY THE CUSTOMER.
.
ALL WELDING ON ROOT PASSES USING GTAW WITH BACKPURGE, AND COMPLETED USING THE PLASMA ARC PROCESS.
.
SPECIAL PRECAUTIONS MUST BE TAKEN NOT TO HAVE CARBON STEEL IN CONTACT WITH THE MATERIAL ON THIS JOB, AS WELL AS NO OILS, & OR HYDROCARBON CONTAMINATION OF ANY TYPE.
.
WELDING BY QUALIFIED PERSONELL ONLY USING GTAW, & PAW IN ACCORDANCE WITH PROCEDURES: P-P8-P8-2, REV. 0., AND T-P8-P8-PSI, REV.0.
.
NO AIR TOOLS CAN BE USED FOR PROCESSING THIS MATERIAL, USE ONLY ELECTRIC TOOLS,GRINDING IS PERMISSIBLE ONLY IF FOLLOWED BY CARBIDE BURRS. PLASMA CUT EDGES ALSO REQUIRE CARBIDE BURRING.
.
ALL HEAT NO'S MUST BE RECORDED, & MAINTAINED.
PARTS ARE TO BE VIBRO-ETCHED ON THE O.D. ONLY.
.
NO MARKING ON THE PART I.D. AT ALL, AND NO MARKERS ON THE MATERIAL. MARKING ON THE O.D. ON YELLOW 3M BRAND NUCLEAR TAPE # 483, PURCHASED FOR THIS JOB, MARKINGS ALLOWED ON THIS TAPE ONLY.
.

10	FC1	070	Plasma Cut	FC	1.00	15		.00		150.00	9/09/96	9/18/96	

.
PLASMA CUT ITEMS PER B.O.M., NOTE STITCH BURNING ON ITEM 3, ON THE INSIDE 59 1/2" PORT HOLES.
.
RECORD ALL HEAT NO. ON THE O.D. ON THE ABOVE SPECIFIED NUCLEAR TAPE.
.
BY: RPG DATE: 09/26/96
. DRB 9-10-96

15	BV1	200	Bevel to Spec.	BV	1.00	15		.00		180.00	9/18/96	10/02/96	

.

PROG: JC41[illegible] ROUTING SHEET PAGE: 3
USER: DRB --- SHOP COPY --- DATE: 10/01
TIME: 14.47

COMPANY: 1 RANOR, INC.

JOB/LOT NUMBER	JOB DESC.	PART NUMBER	PART DESCRIPTION	- CODES - REV # JOB USER	CUSTOMER P.O. N
7300FM	LIGO VACUMM CHAMBER	V049-4-101	PSI BEAM SPLITTER CHAMBERS		555822

LEVEL OF ASSY: 1A REV	PART NUMBER	PART DESCRIPTION	PROD QTY	START DATE	DUE DATE	PARENT LEVEL
	V049-4-101 LEV 1A	P.S.I. BOTTOM SHELL	15	9/09/96	2/14/97	

OPERATIONS:

SEQ	W/C	OPR	DESCRIPTION	DPT	PCS/ASY	OP. QTY	OVERLAP	S/U STD	PROD STD	PROD HRS	START	DUE	IN

PROTECT THE INSIDE SURFACE FROM DIRT, & OILS.

USE ALUMINUM SHOES WITH BEVELER TO AVOID CARBON STEEL CONTACT WITH THE INSIDE OF THE SHELL.

PREP THE EDGES OF ITEMS 3, FOR LONGITUDINAL SEAM WELD.

PER DRAWING DETAILS 8, WELD MAP.

SIGN OFF FOR EACH OF THE SERIAL NUMBERS PREPED.

S/N 4 DPKM S/N 5 DPKM S/N 1 JG S/N 2 JG S/N 3 JG

MC 10-1-96

BEVELING COMPLETED FOR THIS LOT OF PARTS.

BY: JG DATE: 9/27/96

SEQ	W/C	OPR	DESCRIPTION	DPT	PCS/ASY	OP. QTY	OVERLAP	S/U STD	PROD STD	PROD HRS	START	DUE	IN
17	QC3	585	Dimensional Inspection	QC	1.00	15		.00		1.00	10/02/96	10/02/96	

INSPECT WELD BEVEL PER SKETCH #6, DETAIL X.

SIGN OFF FOR EACH OF THE CYLINDERS INSPECTED.

S/N 4 JPM S/N 5 JPM S/N 1 JPM S/N 2 JPM S/N 3 JPM

OPERATION COMPLETED FOR THIS LOT OF PARTS.

BY: JPM DATE: 9-28-96

SEQ	W/C	OPR	DESCRIPTION	DPT	PCS/ASY	OP. QTY	OVERLAP	S/U STD	PROD STD	PROD HRS	START	DUE	IN
20	PB1	260	Bump - Start	PB	1.00	15		.00		90.00	10/02/96	10/09/96	

VERIFY THE DIRECTION OF ROLLING WITH REFERENCE TO THE WELD PREPS, PRIOR TO FORMING.

USE ALUMINUM AND OR CARPET PURCHASED FOR THIS PROJECT TO AVOID ANY CARBON STEEL CONTACT WITH THE INSIDE OF THE VESSEL

BUMP START ENDS OF ITEMS 3, PER SKETCH 6.

SIGN OFF FOR EACH OF THE SERIAL NUMBERS BUMPED.

PROG: JC4100

USER: DRB

ROUTING SHEET

--- SHOP COPY ---

PAGE: 4
DATE: 10/01
TIME: 14.47

COMPANY: 1 RANOR, INC.

JOB/LOT NUMBER	JOB DESC.	PART NUMBER	PART DESCRIPTION	REV	- CODES - # JOB USER	CUSTOMER P.O.
7300FM	LIGO VACUMM CHAMBER	V049-4-101	PSI BEAM SPLITTER CHAMBERS			555822

LEVEL OF ASSY: 1A	REV	PART NUMBER	PART DESCRIPTION	PROD QTY	START DATE	DUE DATE	PARENT LEVEL
		V049-4-101 LEV 1A	P.S.I. BOTTOM SHELL	15	9/09/96	2/14/97	

OPERATIONS:

SEQ	W/C	OPR	DESCRIPTION	DPT	PCS/ASY	OP. QTY	OVERLAP	S/U	STD	PROD STD	PROD HRS	START	DUE	IN
			S/N 4 S/N 5 S/N 1 S/N 2 S/N 3											
			OPERATION COMPLETED FOR THIS LOT OF PARTS.											
			BY: DATE: 10/3/96											
25	RO1	300	Roll Forming	RO	1.00	15			.00		375.00	10/10/96	11/12/96	
			VERIFY THE INSIDE SURFACE PRIOR TO ROLLING, & THAT BEVELS ARE CORRECT WITH REFERENCE TO THE I.D..											
			ROLL ITEMS 3, PER DRAWING DETAIL 8, AND SKETCH 6.											
			SIGN OFF EACH SERIAL NUMBER ROLLED.											
			S/N 4 D.P. S/N 5 D.P. S/N 1 D.P. S/N 2 D.P. S/N 3 D P											
			OPERATION COMPLETED FOR THIS LOT OF PARTS.											
			BY: DATE: 10-3-96											
30	QC2	585	Dimensional Inspection	QC	1.00	15			.00		150.00	11/12/96	11/26/96	
			INSPECT ALL ITEMS PRIOR TO WELDING, & FIT-UP PER DRAWINGS AND SKETCHES.											
			SIGN OFF FOR EACH OF THE CYLINDERS INSPECTED.											
			S/N 4 JPM S/N 5 JPM S/N 1 JPM S/N 2 JPM S/N 3 JPM											
			OPERATION COMPLETED FOR THIS LOT OF PARTS.											
			BY: JPM DATE: 10-3-96											
35	AF1	400	Welding Assembly-Fitting	AS	1.00	15			.00		150.00	11/26/96	12/10/96	
			FIT-UP FOR WELDING THE LONGITUDINAL SEAM OF ITEM 3, REFERENCE DRAWING DETAIL, SKETCHES, AND WELD MAP.											

PROG: JC4100 PRODUCTION

USER: DRB

ROUTING SHEET

--- SHOP COPY ---

PAGE: 5
DATE: 10/01
TIME: 14.47

COMPANY: 1 RANOR, INC.

JOB/LOT NUMBER	JOB DESC.	PART NUMBER	PART DESCRIPTION	REV	- CODES - #	JOB USER	CUSTOMER P.O.
7300FM	LIGO VACUMM CHAMBER	V049-4-101	PSI BEAM SPLITTER CHAMBERS				555822

LEVEL OF ASSY: 1A	REV	PART NUMBER	PART DESCRIPTION	PROD QTY	START DATE	DUE DATE	PARENT LEVEL
		V049-4-101 LEV 1A	P.S.I. BOTTOM SHELL	15	9/09/96	2/14/97	

OPERATIONS:

SEQ	W/C	OPR	DESCRIPTION	DPT	PCS/ASY	OP. QTY	OVERLAP	S/U	STD	PROD STD	PROD HRS	START	DUE	IN

SIGN OFF FOR EACH OF THE CYLINDERS FIT-UP.

S/N 4 DW S/N 5 DW S/N 6 DW S/N 2 DW S/N 3 DW

OPERATION COMPLETED FOR THIS LOT OF PARTS.

BY: DW DATE: 10/3/96

40 QC2 560 Fit Up Inspection QC 1.00 15 .00 45.00 12/10/96 12/12/96

INSPECT THE FIT-UP FOR WELD OF THE ABOVE ITEM.

SIGN-OFF FOR EACH OF THE CYLINDERS CHECKED.

S/N [illegible] S/N [illegible] S/N [illegible] S/N RANOR S/N RANOR

OPERATION COMPLETED FOR THIS LOT OF PARTS.

INSPECTED BY: [signature] DATE: 10-3-96

REF. P.S.I. QUALITY PLAN SEQ. G. , NO CUSTOMER WITNESS REQ. FOR FIT-UP.

45 WE1 466 GTAW-SS WE 1.00 15 .00 450.00 12/12/96 1/24/97

WELD LONGITUDINAL SEAM
REFERENCE THE WELD PROCEDURES, WELD MAPS, & DRAWING DETAILS.

SIGN OFF WELD MAP PER SERIAL NUMBER (S/N) WELDED.
AS WELL AS BELOW FOR TRACKING OF COMPLETED SERIAL NUMBERS.

S/N 1 W S/N 2 RR S/N 3 S/N 4 S/N 5 RR

OPERATION COMPLETED FOR THIS LOT OF PARTS.

BY: _____ DATE: _____

Don Rooney:
Did not sign.
weld maps.

50 QC3 573 Visual Inspection QC 1.00 15 .00 60.00 1/24/97 1/29/97

INSPECT WELDS ON LOGNITUDAL SEAM OF THE LOWER SHELL

PROG: JC4100

USER: DRB

ROUTING SHEET

--- SHOP COPY ---

PAGE: 6
DATE: 10/01
TIME: 14.47

COMPANY: 1 RANOR, INC.

JOB/LOT NUMBER	JOB DESC.	PART NUMBER	PART DESCRIPTION	REV #	- CODES - JOB USER	CUSTOMER P.O. N
7300FM	LIGO VACUMM CHAMBER	V049-4-101	PSI BEAM SPLITTER CHAMBERS			555822

LEVEL OF ASSY: 1A REV	PART NUMBER	PART DESCRIPTION	PROD QTY	START DATE	DUE DATE	PARENT LEVEI
	V049-4-101 LEV 1A	P.S.I. BOTTOM SHELL	15	9/09/96	2/14/97	

OPERATIONS:

SEQ	W/C	OPR	DESCRIPTION	DPT	PCS/ASY	OP. QTY	OVERLAP	S/U	STD	START	DUE	IN
			SIGN OFF ON THIS OPERATION SEQUENCE, & WELD MAP.									
			S/N_____ S/N_____ S/N_____ S/N_____ S/N_____									
			OPERATION COMPLETED FOR THIS LOT OF PARTS.									
			INSPECTED BY: (RANOR Q.C.)_____ DATE:_____									
			FILL OUT APPROPRIATE NDE, VISUAL INSPECTION REPORT, PER S/N EXAMINED.									
			INSPECTED BY: (P.S.I.) Gene Leneveu DATE 10-3-96 S/N 1,395									
			REF. P.S.I. QUALITY PLAN SEQ.G.									
55	FN1	502	Grind 3 to 1 Taper	FN	1.00	15		.00		5.00	1/29/97	1/29/97
			GRIND THE 3 TO 1 TAPER ON THE LOWER HEAD (1/2" MATERIAL) TO THE HEAD (3/8 " MATERIAL) PER DRAWING DETAIL 3, AND SECTION C-C ON SHEET 1.									
			SIGN OFF FOR EACH OF THE SERIAL NUMBERS GROUND.									
			S/N_____ S/N_____ S/N_____ S/N_____ S/N_____									
			OPERATION COMPLETED FOR THIS LOT OF PARTS.									
			BY: _____ DATE:_____									
60	PB1	265	Reround Within 1/8"	PB	1.00	15		.00		90.00	1/30/97	2/06/97
			RE-ROUND CYLINDER PER SKETCH # 6.									
			SIGN OFF FOR EACH OF THE SERIAL NUMBERS RE-ROUNDED.									
			S/N 3 DP 10-1-96 S/N DP 10-11-96 S/N DP 12-13-96 S/N DP S/N DP 1-4-97									
			OPERATION COMPLETED FOR THIS LOT OF PARTS.									
			BY: _____ DATE:_____									
65	QC3	585	Dimensional Inspection	QC	1.00	15		.00		60.00	2/06/97	2/11/97

QC seq 50
welding - V

N/A JPB

N/A JPB

PROG: JC4100 R O U T I N G S H E E T PAGE:
USER: DRB --- SHOP COPY --- DATE: 10/0
TIME: 14.4

COMPANY: 1 RANOR, INC.

JOB/LOT NUMBER	JOB DESC.	PART NUMBER	PART DESCRIPTION	- CODES - REV # JOB USER	CUSTOMER P.O.
7300FM	LIGO VACUMM CHAMBER	V049-4-101	PSI BEAM SPLITTER CHAMBERS		555822

LEVEL OF ASSY: 1A	REV	PART NUMBER	PART DESCRIPTION	PROD QTY	START DATE	DUE DATE	PARENT LEVEL
		V049-4-101 LEV 1A	P.S.I. BOTTOM SHELL	15	9/09/96	2/14/97	

OPERATIONS:

SEQ	W/C	OPR	DESCRIPTION	DPT	PCS/ASY	OP. QTY	OVERLAP	S/U	STD	PROD STD	PROD HRS	START	DUE	IN
			.											
			INSPECT FINSIHED SHELL, PER DRAWING, & SKETCH.											
			.											
			SIGN OFF FOR EACH OF THE SERIAL NUMBERS INSPECTED.											
			.											
			S/N_____ S/N_____ S/N_____ S/N_____ S/N_____											
			.											
			.											
			OPERATION COMPLETED FOR THIS LOT OF PARTS.											
			.											
			INSPECTED BY: (RANOR Q.C.)_____ DATE:_____											
			.											
70	AF1	400	Welding Assembly-Fitting	AS	1.00	15			.00		60.00	2/11/97	2/14/97	
			.											
			RE-ASSEMBLE CYLINDER & FIXTURES FOR ASSEMBLY.											
			.											
			SIGN OFF FOR EACH OF THE SERIAL NUMBERS ASSEMBLED.											
			.											
			S/N_____ S/N_____ S/N_____ S/N_____ S/N_____											
			.											
			OPERATION COMPLETED FOR THIS LOT OF PARTS.											
			.											
			BY: _____ DATE:_____											
			.											
			SEE NEXT LEVEL OF ASSEMBLY LEVEL 1, LOWER SHELL ASSEMBLY.											
			.											

W/O JOB

PROG: JC41

USER: DHOOD

PRODUCTION

ROU . NG SHEET

--- SHOP COPY ---

Level 1C

Units 1 - 5

PAGE: 2

DATE: 9/2(

TIME: 8.4(

COMPANY: 1 RANOR, INC.

JOB/LOT NUMBER	JOB DESC.	PART NUMBER	PART DESCRIPTION	REV	- CODES - # JOB USER	CUSTOMER P.O. N
7300FM	LIGO VACUMM CHAMBER	V049-4-101	PSI BEAM SPLITTER CHAMBERS			555822

LEVEL OF ASSY: 1C	REV	PART NUMBER	PART DESCRIPTION	PROD QTY	START DATE	DUE DATE	PARENT LEVEI
		V049-4-101 LEV 1C	P.S.I. LOWER SHELL MISC. PARTS	15	1/11/96	2/13/97	

OPERATIONS:

SEQ	W/C	OPR	DESCRIPTION	DPT	PCS/ASY	OP. QTY	OVERLAP	S/U STD	PROD STD	PROD HRS	START	DUE	IN

THIS LEVEL 1C, IS FOR THE FABRICATION OF THE LOWER SHELL MISCELANIOUS PARTS, FLANGES, & STIFFNERS.

SPECIAL PRECAUTIONS MUST BE TAKEN TO AVOID CARBON STEEL CONTACT WITH THE INSIDE OF THIS VESSEL. ALSO NO OILS, AND OR HYDROCARBON CONTAMINATION OF ANY TYPE IS ALLOWED.

WELDING BY QUALIFIED PERSONELL ONLY USING GTAW, AND PAW IN ACCORDANCE WITH PROCEDURES : T-P8-P8-PSI, REV.0, AND P-P8-P8-2, REV. 0.

NO AIR TOOLS CAN BE USED FOR PROCESSING THIS MATERIAL, USE ONLY ELECTRIC TOOLS. GRINDING IS ALLOWED PROVIDED THE GROUND EDGE IS CLEANED WITH A CARBIDE BURR. ALL PLASMA CUT EDGES ALSO REQUIRE CARBIDE BURRING.

ALL HEAT NO'S MUST BE RECORDED, & MAINTAINED .
PARTS ARE TO BE VIBRO-ETCHED ON THE O.D. ONLY.
NO MARKINGS AT ALL ON THE I.D. AND NO MAGIC MARKERS ON THE O.D.

MATERIAL: 304 L SUPPLIED BY THE CUSTOMER.

SEQ	W/C	OPR	DESCRIPTION	DPT	PCS/ASY	OP. QTY	OVERLAP	S/U STD	PROD STD	PROD HRS	START	DUE	IN
10	FC1	070	Plasma Cut	FC	1.00	15		.00		150.00	1/11/96	1/25/96	

PLASMA CUT ITEMS: 16, 20, & 55 PER B.O.M. AND DNC'S.

CUT ITEM# 16 FROM THE 3/4"PL X 36 X 60 PLATE SUPPLIED.

ITEM# 20 AND 55 WILL BE CUT FROM THE 59 1/2"DIA. DROPS ON LEVEL# 1A, ITEM# 3.

MARK PARTS WITH A VIRO-ETCH TOOL ON THE O.D. ONLY.

BY: R.R. DATE: —

SEQ	W/C	OPR	DESCRIPTION	DPT	PCS/ASY	OP. QTY	OVERLAP	S/U STD	PROD STD	PROD HRS	START	DUE	IN
15	S01	150	Saw Cut	SW	1.00	15		.00		450.00	1/25/96	3/06/96	

SAW CUT THE FOLLOWING ITEMS PER THE B.O.M. AND SKETCHES.

ITEM 15, MAKE FROM 3/8 x 4 BAR ROLLED WITH A 105 1/2"

N/A JAB

PROG: JC41 PRODUCTION

USER: DHOOD

ROU..NG SHEET

--- SHOP COPY ---

PAGE: 1
DATE: 9/2(
TIME: 8.4(

COMPANY: 1 RANOR, INC.

JOB/LOT NUMBER	JOB DESC.	PART NUMBER	PART DESCRIPTION	REV #	- CODES - JOB	USER	CUSTOMER P.O. N
7300FM	LIGO VACUMM CHAMBER	V049-4-101	PSI BEAM SPLITTER CHAMBERS				555822

LEVEL OF ASSY: 1C	REV	PART NUMBER	PART DESCRIPTION	PROD QTY	START DATE	DUE DATE	PARENT LEVEI
		V049-4-101 LEV 1C	P.S.I. LOWER SHELL MISC. PARTS	15	1/11/96	2/13/97	

OPERATIONS:

SEQ	W/C	OPR	DESCRIPTION	DPT	PCS/ASY	OP. QTY	OVERLAP	S/U STD	PROD STD	PROD HRS	START	DUE	IN
			I.D., LAYOUT & SAW THE SEGMENTS AS REQUIRED TO MAKE A 360 DEG. RING PER SKETCH# 1. (3 PC. CONSTRUCTION MAY BE REQUIRED.)										
			ITEM 21A, 21B,& 22 SAW TO LENGTH FOR PRE-MACHINING, PER B.O.M. .										
			ITEM 51, SAW TO LENGTH PER SKETCH# 6. MAKE FROM 1/2" x 2" ROLLED THE HARD WAY TO 52.00" OUTSIDE RADIUS.										
			BY: _____ DATE: _____										
20	SH1	100	Shear Per B.O.M.	SH	1.00		15	.00		90.00	3/06/96	3/13/96	
			SHEAR ITEM 52 (GUSSETS) PER THE B.O.M. SHEAR FROM 3/8 X 2 FLAT BAR.										
			BY: _____ DATE: _____										
25	BV1	200	Bevel to Spec.	BV	1.00		15	.00		300.00	3/13/96	4/10/96	
			BEVEL ITEM 15 PER SKETCH# 1. BY _____ DATE _____										
			BEVEL ITEM# 22 PER SKETCH# 5. BY _____ DATE 10/30/96										
			BEVEL ITEM# 21A PER SKETCH# 3. BY _____ DATE _____										
			BEVEL ITEM# 21B PER SKETCH# 4. BY _____ DATE _____										
			BEVEL ITEM# 52 PER SKETCH# 7. BY _____ DATE _____										
30	PB1	250	Forming per sketch	PB	1.00		15	.00		120.00	4/10/96	4/22/96	
			FORM ITEM# 20 COMPLETE PER SKETCH# 2.										
			BY: _____ DATE: _____										
35	FN1	500	STEAM CLEANING	FN	1.00		15	.00		120.00	4/22/96	5/01/96	
			STEAM CLEAN ALL PARTS INCLUDING THE PARTS THAT										

SAW OUT. WA

N/A JOB

PROG: JC41 PRODUCTION

USER: DHOOD

ROUTING SHEET

--- SHOP COPY ---

PAGE: 4
DATE: 9/2(
TIME: 8.4(

COMPANY: 1 RANOR, INC.

JOB/LOT NUMBER	JOB DESC.-	PART NUMBER	PART DESCRIPTION	- CODES - REV #	JOB USER	CUSTOMER P.O. N
7300FM	LIGO VACUMM CHAMBER	V049-4-101	PSI BEAM SPLITTER CHAMBERS			555822

LEVEL OF ASSY: 1C	REV	PART NUMBER	PART DESCRIPTION	PROD QTY	START DATE	DUE DATE	PARENT LEVEI
		V049-4-101 LEV 1C	P.S.I. LOWER SHELL MISC. PARTS	15	1/11/96	2/13/97	

OPERATIONS:

SEQ	W/C	OPR	DESCRIPTION	DPT	PCS/ASY	OP. QTY	OVERLAP	S/U	STD	PROD STD	PROD HRS	START	DUE	IN
			REQUIRE SUBASSEMBLY. PROTECT PARTS WITH CLEAN PLASTIC, AND STORE IN THE P.S.I. AREA.											
			BY: JB DATE: —											
			********** SEND TO THE MACHINE SHOP ********** SEND ALL MISC. PARTS THAT REQUIRE PREMACHINING.											
40	M1	615	Machine per print	MI	1.00		15		.00		300.00	5/01/96	5/30/96	
			USE ONLY CLEAN CINCINNATI MILICRON CIMTECK 410 FOR MACHINE COOLANT.											
			MACHINE PART# 20 COMPLETE PER SKETCH# 2 BY_____ DATE_____											
			MACHINE PART# 21A COMPLETE PER SKETCH# 3 BY_____ DATE_____											
			MACHINE PART# 21B COMPLETE PER SKETCH# 4. BY_____ DATE_____											
			MACHINE PART# 22 COMPLETE PER SKETCH# 5. BY_____ DATE_____											
45	VC1	645	Turning	VB	1.00		15		.00		1500.00	5/30/96	10/22/96	
			SEE MATERIAL HANDLING CAUTIONS SHEET 1, & MACHINE COOLANT REQUIREMENTS, OPERATION 40.											
			MACHINE PART# 5 COMPLETE PER DWG# V049-4-022. Ranor PT#1-20 11/20/96 BY_____ DATE_____											
			MACHINE PART# 7 COMPLETE PER DWG# V049-4-019. BY_____ DATE_____											
			ALL FINISHED SURFACES MUST BE PROTECTED. NO OILS OR ANY CARBON STEEL CAN CONTACT THE MATERIAL ON THIS JOB.											
			BY: _____ DATE: _____											
50	HC1	615	Machine per print	HB	1.00		15		.00		900.00	10/22/96	1/15/97	

COMPANY: 1 RANOR, INC.

JOB/LOT NUMBER	JOB DESC.	PART NUMBER	PART DESCRIPTION	- CODES - REV # JOB USER	CUSTOMER P.O. N
7300FM	LIGO VACUMM CHAMBER	V049-4-101	PSI BEAM SPLITTER CHAMBERS		555822

LEVEL OF ASSY: 1C REV	PART NUMBER	PART DESCRIPTION	PROD QTY	START DATE	DUE DATE	PARENT LEVEL
	V049-4-101 LEV 1C	P.S.I. LOWER SHELL MISC. PARTS	15	1/11/96	2/13/97	

OPERATIONS:

SEQ	W/C	OPR	DESCRIPTION	DPT	PCS/ASY	OP. QTY	OVERLAP	S/U STD	PROD STD	PROD HRS	START	DUE	IN

SEE MATERIAL HANDLING CAUTIONS OPERATION 45.

FINISH MACHINING THE FLANGES COMPLETE PER THE DRAWINGS AND THE MACHINE SHOP OPERATIONS SHEET AND INSTRUCTIONS.

BY: _____ DATE: _____

53 QC3 585 Dimensional Inspection QC 1.00 15 .00 2.00

QC TO DIMENSIONALY CHECK ALL PREMACHINED PARTS COMPLETE PER THE SKETCHES AND DRAWINGS.

INSPECTED: BY_____ DATE_____

********** SEND TO THE FAB SHOP **********

55 AF1 400 Welding Assembly-Fitting AS 1.00 15 .00 60.00 1/15/97 1/21/97

FIT-UP THE SUPPORT PAD SUB-ASSEMBLIES PER DWG. SHEET 4, DETAIL 15, ITEMS 20, & 55.

BY: A. DATE: 2,3,97

FORMAN TO CHECK FITUP BY 2/3/97 DATE JAB

60 WE1 466 GTAW-SS / PAW WE 1.00 15 .00 150.00 1/21/97 1/31/97

ALL WELDING BY QUALIFIED PERSONEL PER PROCEDURES. SEE GENERAL NOTES ON MATERIAL HANDLING, AND REQUIREMENTS ON THE FIRST PAGE OF THIS ROUTING .

WELD THE SUPPORT PAD SUB-ASSEMBLIES PER DRAWING, WELD PROCEDURES, & WELD MAPS.

COMPLETE THE WELD MAPS AND NOTIFY QC FOR THE VT INSPECTION OF THE WELDS.

BY: A. DATE: 2,3,97

CHECK WELDS BY JAB DATE 2/3/97

PROG: JC41C...

USER: DHOOD

ROUTING SHEET

--- SHOP COPY ---

PAGE: 6
DATE: 9/2C
TIME: 8.49

COMPANY: 1 RANOR, INC.

JOB/LOT NUMBER	JOB DESC.	PART NUMBER	PART DESCRIPTION	REV	- CODES - #	JOB USER	CUSTOMER P.O. N
7300FM	LIGO VACUMM CHAMBER	V049-4-101	PSI BEAM SPLITTER CHAMBERS				555822

LEVEL OF ASSY: 1C	REV	PART NUMBER	PART DESCRIPTION	PROD QTY	START DATE	DUE DATE	PARENT LEVEI
		V049-4-101 LEV 1C	P.S.I. LOWER SHELL MISC. PARTS	15	1/11/96	2/13/97	

OPERATIONS:

SEQ	W/C	OPR	DESCRIPTION	DPT	PCS/ASY	OP. QTY	OVERLAP	S/U	STD	PROD STD	PROD HRS	START	DUE	IN
62	QC3	573	Visual Inspection	QC	1.00	15			.00		2.00			

VISUAL INSPECTION OF THE WELDS IS REQUIRED.
COMPLETE THE VT INSPECTION REPORT.

INSPECTED: BY_____ DATE_____

SEQ	W/C	OPR	DESCRIPTION	DPT	PCS/ASY	OP. QTY	OVERLAP	S/U	STD	PROD STD	PROD HRS	START	DUE	IN
65	PB1	265	REROUND	PB	1.00	15			.00		60.00	1/31/97	2/06/97	

N/A. JRB

REROUND THE INSIDE RADIUS OF THE CHAMBER SUPPORT PAD SUB -ASSEMBLIES PER DRAWING. (52 3/4" I.R.)(ITEM 20 & 55).

BY: _____ DATE:_____

SEQ	W/C	OPR	DESCRIPTION	DPT	PCS/ASY	OP. QTY	OVERLAP	S/U	STD	PROD STD	PROD HRS	START	DUE	IN
70	FN1	500	STEAM CLEANING	FN	1.00	15			.00		90.00	2/06/97	2/13/97	

STEAM CLEAN ALL SUBASSEMBLIES AND MACHINED PARTS. PROTECT THE PARTS WITH PLASTIC AND STORE IN THE P.S.I. AREA.

BY: JRB _____ DATE:_____

PROG: JC4100 R O U T I N G S H E E T Level 1D Units 1 - 5 PAGE: 2
USER: DRB --- SHOP COPY --- DATE: 9/2
TIME: 11.3

COMPANY: 1 RANOR, INC.

JOB/LOT NUMBER	JOB DESC.	PART NUMBER	PART DESCRIPTION	REV	- CODES - #	JOB USER	CUSTOMER P.O.
7300FM	LIGO VACUMM CHAMBER	V049-4-101	PSI BEAM SPLITTER CHAMBERS				555822

LEVEL OF ASSY: 1D	REV	PART NUMBER	PART DESCRIPTION	PROD QTY	START DATE	DUE DATE	PARENT LEVEL
		V049-4-101 LEV 1D	P.S.I. LWR FLNG-ASSY PRE-MACH	15	10/25/96	2/14/97	

OPERATIONS:

SEQ	W/C	OPR	DESCRIPTION	DPT	PCS/ASY	OP. QTY	OVERLAP	S/U STD	PROD STD	PROD HRS	START	DUE	IN
			. THIS LEVEL 1D, IS FOR THE MACHINING OF THE LOWER SHELL FLANGE ASSEMBLIES FOR A CONTOUR FIT TO THE LOWER 1/2" VESSEL. . REFERENCE ITEM NO'S: 9B, 13, 10, & 11. . SPECIAL PRECAUTIONS MUST BE TAKEN TO AVOID CARBON STEEL CONTACT WITH THE INSIDE OF THIS VESSEL. ALSO NO OILS, AND OR HYDROCARBON CONTAMINATION OF ANY TYPE IS ALLOWED. . WELDING BY QUALIFIED WELDERS ONLY, USING GTAW, AND PAW IN ACCORDANCE WITH PROCEDURES: P-P8-P8-2, REV.O, AND T-P8-P8-PSI, REV. O. . NO AIR TOOLS CAN BE USED FOR PROCESSING THIS MATERIAL, USE ONLY ELECTRIC TOOLS . GRINDING IS ALLOWED PROVIDED THE GROUND EDGE IS CLEANED WITH A CARBIDE BURR. PLASMA CUT EDGES ALSO REQUIRE CARBIDE BURRING. . ALL HEAT NO'S MUST BE RECORDED, & MAINTAINED . PARTS ARE TO BE VIBRO-ETCHED ON THE O.D. ONLY. NO MARKINGS AT ALL ARE ALLOWED ON THE I.D., AND NO MAGIC MARKERS ON THE O.D. MARKING ON THE O.D. ON 3M YELLOW NUCLEAR TAPE # 483, PURCHASED FOR THIS JOB. MARKING ON THIS MATERIAL ONLY. . MATERIAL: 304 L SUPPLIED BY THE CUSTOMER.									
10	S01	150	Saw Cut	SW	1.00	15		.00		25.00	10/25/96	10/29/96	
			. USE CAUTION TO PROTECT THE FINISHED MACHINED SURFACES. . SAW CUT ITEMS BELOW PER B.O.M., & SKETCHES 1 THRU 4 FOR PRE-MACHINING. . BY: KA DATE: 12/19/96										
15	M1	615	Machine per print	MI	1.00	15		.00		125.00	10/29/96	11/08/96	
			. SEE SKETCHES 1 THRU 4. . USE ONLY CLEAN CINCINNATI MILICRON CIMTECK 410 FOR										

PROG: JC4100 R O U T I N G S H E E T PAGE: 3
USER: DRB --- SHOP COPY --- DATE: 9/26
TIME: 11.36

COMPANY: 1 RANOR, INC.

JOB/LOT NUMBER	JOB DESC.	PART NUMBER	PART DESCRIPTION	- CODES - REV # JOB USER	CUSTOMER P.O.
7300FM	LIGO VACUMM CHAMBER	V049-4-101	PSI BEAM SPLITTER CHAMBERS		555822

LEVEL OF ASSY: 1D REV	PART NUMBER	PART DESCRIPTION	PROD QTY	START DATE	DUE DATE	PARENT LEVEL
	V049-4-101 LEV 1D	P.S.I. LWR FLNG-ASSY PRE-MACH	15	10/25/96	2/14/97	

OPERATIONS:

SEQ	W/C	OPR	DESCRIPTION	DPT	PCS/ASY	OP. QTY	OVERLAP	S/U STD	PROD STD	PROD HRS	START	DUE	IN
			MACHINE COOLANT.										
			APPROXIMATLY 1/4" HAS BEEN ALLOWED FOR MACHINING.										
			BY: _____ DATE: _____										
20	HC1	615	Machine per print	HB	1.00	15		.00		150.00	11/08/96	1/31/97	
			SEE MATERIAL HANDLING CAUTIONS OPERATION 15										
			MACHINE THE CONTOUR FIT PER DRAWING, & PROGRAM PROGRAM INSTRUCTIONS.										
			BY: J.L. DATE: 1/2/97										
25	PB1	265	Reround	PB	1.00	15		.00		100.00	1/31/97	2/07/97	
			N/P JOB										
			REROUND THE MACHINED FLANGE ASSEMBLY TUBE END FOR ASSEMBLY, USE CAUTION TO PROTECT THE FINISHED MACHINED FLANGE SURFACES.										
			BY: _____ DATE: _____										
30	FN1	500	Steam Cleaning	FN	1.00	15		.00		20.00	2/07/97	2/14/97	
			STEAM CLEAN USING " OAKITE " 1300 FOLLOWED BY CLEAN STEAM.										
			BY: JB DATE: 1-3-97										

1st Pc. INSP. R.J. 11-22-96

1st pc PT# 11 12-31-96

1st pc PT# 11 1-3-97 new setup

1st pc PT# 1 1-30-97

PROG: JC4100
USER: DRB

PROTOTYPE

ROUTING SHEET
--- SHOP COPY ---

Level 1E
Units 1 - 5

PAGE: 2
DATE: 9/24
TIME: 15.12

COMPANY: 1 RANOR, INC.

JOB/LOT NUMBER	JOB DESC.	PART NUMBER	PART DESCRIPTION	- CODES - REV #	JOD USER	CUSTOMER P.O. N
7300FM	LIGO VACUMM CHAMBER	V049-4--101	PSI BEAM SPLITTER CHAMBERS			555822

LEVEL OF ASSY: 1E	REV	PART NUMBER	PART DESCRIPTION	PROD QTY	START DATE	DUE DATE	PARENT LEVEI
		V049-4-101 LEV 1E	P.S.I. 1/2", 60"PORTS	15	4/10/95	2/14/97	

OPERATIONS:

SEQ	W/C	OPR	DESCRIPTION	DPT	PCS/ASY	OP. QTY	OVERLAP	S/U STD	PROD STD	PROD HRS	START	DUE	IN

THIS LEVEL 1E, IS FOR THE LOWER VESSEL 60" PORTS.

REFERENCE DRAWING V049-4-101, AND V049-4-003

MATERIAL 304 L STAINLESS STEEL, FURNISHED BY THE CUSTOMER.

ALL WELDING ON ROOT PASSES USING GTAW WITH BACKPURGE, AND COMPLETED USING THE PLASMA ARC PROCESS.

SPECIAL PRECAUTIONS MUST BE TAKEN NOT TO HAVE CARBON STEEL IN CONTACT WITH THE MATERIAL ON THIS JOB, AS WELL AS NO OILS, & OR HYDROCARBON CONTAMINATION OF ANY TYPE.

WELDING BY QUALIFIED PERSONELL ONLY USING GTAW, & PAW IN ACCORDANCE WITH PROCEDURES: P-P8-P8-2, REV. 0., AND T-P8-P8-PSI, REV.0.

NO AIR TOOLS CAN BE USED FOR PROCESSING THIS MATERIAL, USE ONLY ELECTRIC TOOLS,GRINDING IS PERMISSIBLE ONLY IF FOLLOWED BY CARBIDE BURRS. PLASMA CUT EDGES ALSO REQUIRE CARBIDE BURRING.

ALL HEAT NO'S MUST BE RECORDED, & MAINTAINED.
PARTS ARE TO BE VIBRO-ETCHED ON THE O.D. ONLY.

NO MARKING ON THE PART I.D. AT ALL, AND NO MARKERS ON THE MATERIAL. MARKINGS ON THE O.D ON 3M YELLOW NUCLEAR TAPE # 483 PURCHASED FOR THIS JOB, MARKINGS ON THIS MATERIAL ONLY.

SEQ	W/C	OPR	DESCRIPTION	DPT	PCS/ASY	OP. QTY	OVERLAP	S/U STD	PROD STD	PROD HRS	START	DUE	IN
10	FC1	070	Plasma Cut	FC	1.00	15		.00		150.00			

PLASMA CUT ITEMS PER B.O.M., & DNC.

ITEM 12 DNC MAKES 7 PCS, 4 PCS REQUIRED, PER UNIT.

RECORD ALL HEAT NUMBERS FOR EACH PART.

BY: [illegible] DATE: 09/27/96

SEQ	W/C	OPR	DESCRIPTION	DPT	PCS/ASY	OP. QTY	OVERLAP	S/U STD	PROD STD	PROD HRS	START	DUE	IN
15	HC8	615	Machine per print	HB	1.00	15		.00		50.00			

MACHINE THE FIT-UP PREP. TO THE 105.5" O.D. CYLINDER

N/A - JAB

PROG: JC4100 **PRODUCTION** ROUTING SHEET PAGE:
USER: DRB --- SHOP COPY --- DATE: 9/2
TIME: 15.12

COMPANY: 1 RANOR, INC.

JOB/LOT NUMBER	JOB DESC.	PART NUMBER	PART DESCRIPTION	REV	- CODES - #	JOB USER	CUSTOMER P.O.
7300FM	LIGO VACUMM CHAMBER	V049-4-101	PSI BEAM SPLITTER CHAMBERS				555822

LEVEL OF ASSY: 1E	REV	PART NUMBER	PART DESCRIPTION	PROD QTY	START DATE	DUE DATE	PARENT LEVEL
		V049-4-101 LEV 1E	P.S.I. 1/2", 60"PORTS	15	4/10/95	2/14/97	

OPERATIONS:

SEQ	W/C	OPR	DESCRIPTION	DPT	PCS/ASY	OP. QTY	OVERLAP	S/U	STD	PROD STD	PROD HRS	START	DUE	IN

INCLUDING THE 3/16 WELD PREP.

BY: _____ DATE: _____

20 BV1 200 Bevel to Spec. BV 1.00 15 .00 180.00

PROTECT THE INSIDE SURFACE FROM DIRT, & OILS.

USE ALUMINUM SHOES WITH BEVELER TO AVOID CARBON STEEL CONTACT WITH THE INSIDE OF THE SHELL.

PREP THE EDGES OF ITEM 12, AS REQUIRED.

PER DRAWING DETAIL 9, FOR SEAM WELDS, AND DETAIL 28 FOR ANY ADDITIONAL PREPS REQUIRED FOR FIT-UP.
AS WELL AS SKETCH # 7.

BY: KM DATE: —

25 PB1 260 Bump - Start PB 1.00 15 .00 90.00

VERIFY THE DIRECTION OF ROLLING WITH REFERENCE TO THE WELD PREPS, PRIOR TO FORMING.

USE ALUMINUM AND OR CARPET PURCHASED FOR THIS PROJECT TO AVOID ANY CARBON STEEL CONTACT WITH THE INSIDE OF THE VESSEL

BUMP START ENDS OF ITEM 12, PER SKETCH 7.

BY: BC DATE: 9-26-96

30 RO1 300 Roll Forming RO 1.00 15 .00 375.00

VERIFY THE INSIDE SURFACE PRIOR TO ROLLING, & THAT BEVELS ARE CORRECT WITH REFERENCE TO THE I.D..

ROLL ITEM 12 PER DRAWING DETAIL 10, SHEET 3, AND SKETCH 7.

BY: DP DATE: 10-1-96

35 QC2 585 Dimensional Inspection QC 1.00 15 .00 150.00

PROG: JC4100 PRODUCTION ROUTING SHEET PAGE: 4
USER: DRB ---- SHOP COPY ---- DATE: 9/24
TIME: 15.12

COMPANY: 1 RANOR, INC.

JOB/LOT NUMBER	JOB DESC.	PART NUMBER	PART DESCRIPTION	REV #	- CODES - JOB USER	CUSTOMER P.O. #
7300FM	LIGO VACUUM CHAMBER	V049-4-101	P.S.I. BEAM SPLITTER CHAMBERS			555622

LEVEL OF ASSY:	REV	PART NUMBER	PART DESCRIPTION	PROD QTY	START DATE	DUE DATE	PARENT LEVEL
		V049-4-101 LEV 1E	P.S.I. 1/2", 60"PORTS	15	4/10/95	2/14/97	

OPERATIONS:

SEQ	W/C	OPR	DESCRIPTION	DPT	PCS/ASY	OP. QTY	OVERLAP	S/U STD	PROD STD	PROD HRS	START	DUE	UN
			INSPECT ALL ITEMS PRIOR TO WELDING, & FIT-UP PER DRAWINGS AND SKETCHES.										
			INSPECTED BY:_____ DATE:_____										
40	AF1	400	Welding Assembly-Fitting	AS	1.00		15	.00		150.00			
			FIT-UP FOR WELDING THE LONGITUDINAL SEAMS OF ITEMS [illegible] 12 REFERENCE DRAWING DETAILS, SKETCHES, AND WELD MAPS.										
			BY: _____ DATE:_____										
45	QC2	560	Fit Up Inspection	QC	1.00		15	.00		45.00			
			INSPECT THE FIT-UP FOR WELD OF THE ABOVE ITEMS.										
			INSPECTED BY: _____ DATE:_____										
			REF. P.S.I. QUALITY PLAN SEQ. G. , NO CUSTOMER WITNESS REQ. FOR FIT-UP.										
50	WE1	466	GTAW-SS	WE	1.00		15	.00		450.00			
			REFERENCE THE WELD PROCEDURES, WELD MAPS, & DRAWING DETAILS.										
			SIGN OFF WELDING FOR EACH OF THE 20 NOZZES ON EACH OF THEIR INDIVIDUAL WELD MAPS.										
			BY: _____ DATE:_____										
55	QC3	573	Visual Inspection	QC	1.00		15	.00		60.00			
			INSPECT WELDS ON LOGNITUDAL SEAMS OF THE ABOVE ITEMS										
			SIGN OFF ON THIS OPERATION SEQUENCE, & WELD NDE REPORT.										
			INSPECTED BY: (RANOR Q.C.)_____ DATE:_____										
			INSPECTED BY: (P.S.I.) [signature] DATE 2-5-97										
			REF. P.S.I. QUALITY PLAN SEQ.G.										

PROG: JC4100 R O U T I N G S H E E T PAGE: 5
USER: DRB --- SHOP COPY --- DATE: 9/24
TIME: 15.12

COMPANY: 1 RANOR, INC.

JOB/LOT NUMBER	JOB DESC.	PART NUMBER	PART DESCRIPTION	REV	-- CODES -- JOB USER	CUSTOMER P.O.
75004	LIGO VACUUM CHAMBER	V049-1-101	P.S. BEAM SPLITTER CHAMBERS			95d22

LEVEL OF ASSY:	REV	PART NUMBER	PART DESCRIPTION	PROD QTY	START DATE	DUE DATE	PARENT LEVEL
1E		V049-4-101 LEV 1E	P.S.I. 1/2", 60"PORTS	15	4/10/95	2/14/97	

OPERATIONS:

SEQ	W/C	OPR	DESCRIPTION	DPT	PCS/ASY	OP. QTY	OVERLAP	S/U	STD	PROD STD	PROD HRS	START	DUE	IN
60	PB1	265	REROUND	PB	1.00	15		.00			90.00			

60 "PORTS DJN 10-18-96

RE-ROUND ALL ~~CYLINDERS, & PORTS~~ PER SKETCHES.

BY: _____ DATE: _____

65	QC3	585	Dimensional Inspection	QC	1.00	15		.00			60.00			

INSPECT FINSIHED PORTS, PER DRAWING, & SKETCHES.

INSPECTED BY: (RANOR Q.C.)_____ DATE:_____

70	AF1	400	Welding Assembly-Fitting	AS	1.00	15		.00			60.00			

ASSEMBLE SPIDERS, & RE-ROUNDING FIXTURES FOR ASSEMBLY. TO LOWER SHELL.

BY: SI DATE: —

SEE NEXT LEVEL OF ASSEMBLY LEVEL 1, LOWER SHELL ASSEMBLY.

PROG: JC41

USER: DRB

PRODUCTION

ROUTING SHEET

--- SHOP COPY ---

Level 2

Unit 2

PAGE: 2

DATE: 9/2(

TIME: 11.0(

COMPANY: 1 RANOR, INC.

JOB/LOT NUMBER	JOB DESC.	PART NUMBER	PART DESCRIPTION	- CODES - REV #	JOB USER	CUSTOMER P.O. N
7300FM	LIGO VACUMM CHAMBER	V049-4-101	PSI BEAM SPLITTER CHAMBERS			555822

LEVEL OF ASSY: 2 REV	PART NUMBER	PART DESCRIPTION	PROD QTY	START DATE	DUE DATE	PARENT LEVEI
	V049-4-101 LEV 2	P.S.I. UPPER CHAMBER	15	9/17/96	2/13/97	

OPERATIONS:

SEQ	W/C	OPR	DESCRIPTION	DPT	PCS/ASY	OP. QTY	OVERLAP	S/U STD	PROD STD	PROD HRS	START	DUE	IN

THIS LEVEL 2 IS FOR THE FABRICATION, & MACHINING OF THE UPPER SHELL ASSEMBLY. REF. DRAWING V049-4-101, & V049-4-003.

SPECIAL PRECAUTIONS MUST BE TAKEN NOT TO HAVE CARBON STEEL IN CONTACT WITH THIS VESSEL MATERIAL, AS WELL AS NO OILS, & OR HYDROCARBON CONTAMINATIONS OF ANY TYPE.

WELDING BY QUALIFIED WELDERS ONLY, USING GTAW, & PAW IN ACCORDANCE WITH PROCEDURES: P-P8-P8-1, REV.0 AND T-P8-P8-PSI, REV.0.

NO AIR TOOLS CAN BE USED FOR PROCESSING THIS MATERIAL USE ONLY ELECTRIC TOOLS . GRINDING IS ALLOWED PROVIDED THE EDGE IS CARBIDE BURRED TO CLEAN METAL. ALL PLASMA CUT EDGES MUST ALSO BE CLEANED WITH CARBIDE BURRS.

ALL MATERIALS SUPPLIED BY THE CUSTOMER
MAT'L: 304 L, STAINLESS STEEL.

REFER TO LEVELS BELOW FOR COMPONENT PART FABRICATION:

LEVEL 2A: UPPER SHELL, (item 4)

LEVEL: 2B, UPPER HEAD. (item 65)

LEVEL: 2C, TOP FLANGE, & MISC. PARTS. (items 6,17,18, 19, 34, 50, & 63).

LEVEL: 2D, MACHINED FLANGE ASSEMBLIES.

LEVEL 90: ALL RANOR FIXTURING

SEQ	W/C	OPR	DESCRIPTION	DPT	PCS/ASY	OP. QTY	OVERLAP	S/U STD	PROD STD	PROD HRS	START	DUE	IN
10	FN1	500	STEAM CLEANING	FN	1.00	15		.00		4.00			

STEAM CLEAN USING OAKITE 1300 ONLY, FOLLOWED BY STEAM ONLY

BY: JB DATE: 10-18-96

SEQ	W/C	OPR	DESCRIPTION	DPT	PCS/ASY	OP. QTY	OVERLAP	S/U STD	PROD STD	PROD HRS	START	DUE	IN
15	AF1	400	Welding Assembly-Fitting	AS	1.00	15		.00		15.00	9/17/96	9/18/96	

PRIOR TO FIT-UP, SEE DIMESIONAL INSPECTION REPORTS ON THE HEADS, AND UPPER SHELLS. MATCH SHELLS TO HEADS AS REQUIRED.

PROG: JC4

USER: DRB

ROUTING SHEET

--- SHOP COPY ---

PAGE:
DATE: 9/2
TIME: 11.0

COMPANY: 1 RANOR, INC.

JOB/LOT NUMBER	JOB DESC.	PART NUMBER	PART DESCRIPTION	REV	- CODES - #	JOB USER	CUSTOMER P.O.
7300FM	LIGO VACUMM CHAMBER	V049-4-101	PSI BEAM SPLITTER CHAMBERS				555822

LEVEL OF ASSY:	REV	PART NUMBER	PART DESCRIPTION	PROD QTY	START DATE	DUE DATE	PARENT LEVEL
2		V049-4-101 LEV 2	P.S.I. UPPER CHAMBER	15	9/17/96	2/13/97	

OPERATIONS:

SEQ	W/C	OPR	DESCRIPTION	DPT	PCS/ASY	OP. QTY	OVERLAP	S/U STD	PROD STD	PROD HRS	START	DUE	IN

FIT-UP, & ASSEMBLE THE HEAD ITEM 14 TO THE TOP SHELL ITEM 4 PER DRAWING SHEET 2, DETAIL 4.

HAVE Q.C. VERIFY & SIGN OFF ON SEQ. NO. 20

HEAD TO SHELL FIT-UP:

BY: SI DATE: 10/19/96

FIT-UP & ASSEMBLE THE STIFFNING RING ITEM 17 TO THE LOWER SHELL.

BY: SI DATE: 11/6/96

20 QC2 560 Fit Up Inspection — QC 1.00 — 15 — .00 — 60.00 — 9/18/96 — 9/24/96

INSPECT THE FIT-UP OF THE HEAD TO THE TOP SHELL, ALL FIT-UPS MUST BE WITHIN 1/16".

REF. P.S.I QUALITY PLAN SEQ. I1

HEAD TO SHELL FIT-UP:

INSPECTED BY: (RANOR Q.C.) JP Magnan DATE: 10-21-96

STIFFNER ITEM 17 TO SHELL FIT-UP:

INSPECTED BY: (RANOR Q.C.) JP Magnan DATE: 11-5-96

25 WE1 466 GTAW / PAW-SS — WE 1.00 — 15 — .00 — 300.00 — 9/24/96 — 10/21/96

WELD HEAD TO UPPER SHELL PER DRAWING, & WELD MAP.

REF. WELD PROCEDURES ABOVE: GTAW, & PAW ONLY.

ALL WELDING BY QUALIFIED WELDERS ONLY.
HEAD TO SHELL WELDING:
BY: P DATE: 11/6/96

STIFFNER TO SHELL WELDING (item 17 to 4)

PROG: JC41C

USER: DRB

ROUTING SHEET

--- SHOP COPY ---

PAGE: 4
DATE: 9/2C
TIME: 11.0€

COMPANY: 1 RANOR, INC.

JOB/LOT NUMBER	JOB DESC.	PART NUMBER	PART DESCRIPTION	REV	- CODES - #	JOB USER	CUSTOMER P.O. N
7300FM	LIGO VACUMM CHAMBER	V049-4-101	PSI BEAM SPLITTER CHAMBERS				555822

LEVEL OF ASSY:	REV	PART NUMBER	PART DESCRIPTION	PROD QTY	START DATE	DUE DATE	PARENT LEVEI
2		V049-4-101 LEV 2	P.S.I. UPPER CHAMBER	15	9/17/96	2/13/97	

OPERATIONS:

SEQ	W/C	OPR	DESCRIPTION	DPT	PCS/ASY	OP. QTY	OVERLAP	S/U	STD	PROD STD	PROD HRS	START	DUE	IN
			BY: W DATE: 11/7/96											
30	QC2	573	Visual Inspection	QC	1.00	15		.00			30.00	10/22/96	10/23/96	
			INSPECT THE HEAD TO SHELL WELDS											
			INSPECTED BY: (RANOR Q.C.) [signature] DATE: 11-7-96											
			INSPECTED BY: (P.S.I.) [signature] DATE: 12-19-96											
35	AF1	400	Welding Assembly-Fitting	AS	1.00	15		.00			60.00	10/23/96	10/29/96	
			FIT-UP, & ASSEMBLE LIFT LUGS, AND PUMP REPAD PER DRAWING SHEET 2, DETAIL 21, AND WELD MAP. REF. ITEMS 19, 50, & 63.											
			BY: SE DATE: 11/7/96											
40	QC2	560	Fit Up Inspection	QC	1.00	15		.00			30.00	10/29/96	10/31/96	
			INSPECT LIFT LUG FIT-UP PER DRAWING:											
			INSPECTED BY: (RANOR Q.C.) JP Mayne DATE: 11-7-96											
			PSI INSPECTION NOT REQUIRED. REF. P.S.I. QUALITY PLAN SEQUENCE J1											
45	WE1	466	GTAW / PAW - SS	WE	1.00	15		.00			75.00	10/31/96	11/07/96	
			WELD THE LIFTING LUGS TO UPPER SHELL PER DRAWING SHEET 3, DETAILS 4, & 21. REF.WELD & CLEANING PROCEDURES AS WELL AS WELD MAP.											
			BY: W-P DATE: 11/8/96											
50	QC2	573	Visual Inspection	QC	1.00	15		.00			30.00	11/07/96	11/11/96	
			INSPECT LIFT LUG WELDS											
			INSPECTED BY: (RANOR Q.C.) [signature] DATE: 11-9-96											
			REF. P.S.I. QUALITY PLAN SEQUENCE J1, PSI INSP. NOT REQUIRED											

PRO C4100

USER: DRB

ROUTING SHEET

--- SHOP COPY ---

COMPANY: 1 RANOR, INC.

PAGE:
DATE:
TIME:

JOB/LOT NUMBER: 7300FM
JOB DESC.: LIGO VACUMM CHAMBER
PART NUMBER: V049-4-101
PART DESCRIPTION: PSI BEAM SPLITTER CHAMBERS
REV #:
- CODES - JOB USER:
CUSTOMER P.: 555822

LEVEL OF ASSY: 2
REV PART NUMBER: V049-4-101 LEV 2
PART DESCRIPTION: P.S.I. UPPER CHAMBER
PROD QTY: 15
START DATE: 9/17/96
DUE DATE: 2/13/97
PARENT L

OPERATIONS:

SEQ	W/C	OPR	DESCRIPTION	DPT	PCS/ASY	OP. QTY	OVERLAP	S/U STD	PROD STD	PROD HRS	START	DUE
55	HC4	615	Mach. Port Holes per Routing. SEE MATERIAL HANDLING CAUTIONS SHEET 1 USE ONLY CLEAN WATER SOLUABLE COOLANT REF. CINCINNATI MILACRON " CIMTECK 410 " FOR COOLANT / LUBRICATION. LAYOUT THE TWO PORT LOCATIONS PER DRAWING, SHEET 3 HAVE Q.C. VERIFY LAYOUT. AND MILL / BORE THE TWO LOCATION FOR THE 14" O.D. PORTS. BY: DP DATE: 1/11/97	HB	1.00	15	.00		450.00	11/14/96	12/30/96
60	QC2	585	Dimensional Inspection INSPECT THE 14" DIA. PORT LOCATIONS AS WELL AS THE FLANGE END WELD PREP. INSPECTED BY:(RANOR Q.C. [signature] DATE: 1-12-97 INSPECTED BY: (P.S.I.) [signature] DATE: 2-4-97 REF. P.S.I. INSPECTION PLAN SEQ. M1	QC	1.00	15	.00		45.00	12/30/96	1/03/97
65	AF1	400	Welding Assembly-Fitting ASSEMBLE AND FIT-UP NOZZLE REINFORCEMENTS, ITEM 18 , TWO PLACES. PER DWG. SHEET 2, DETAIL 5. BY: JT DATE: 1/16/97	AS	1.00	15	.00		60.00	1/03/97	1/08/97
70	WE1	466	PAW / GTAW-SS WELD NOZZLE REINFORCEMENTS PER DRAWING SHEET 2, DETAIL 5, AND WELD MAPS. BY: MW DATE: 1-16-97	WE	1.00	15	.00		150.00	1/08/97	1/21/97
75	QC2	573	Visual Inspection INSPECT WELDING OF NOZZLE REPADS.	QC	1.00	15	.00		45.00	1/21/97	1/24/97

PROG: JC41

USER: DRB

ROUTING SHEET

--- SHOP COPY ---

PAGE: 6
DATE: 9/20
TIME: 11.06

COMPANY: 1 RANOR, INC.

JOB/LOT NUMBER	JOB DESC.	PART NUMBER	PART DESCRIPTION	- CODES - REV #	JOB USER	CUSTOMER P.O.
7300FM	LIGO VACUMM CHAMBER	V049-4-101	PSI BEAM SPLITTER CHAMBERS			555822

LEVEL OF ASSY:	REV	PART NUMBER	PART DESCRIPTION	PROD QTY	START DATE	DUE DATE	PARENT LEVEL
2		V049-4-101 LEV 2	P.S.I. UPPER CHAMBER	15	9/17/96	2/13/97	

OPERATIONS:

SEQ	W/C	OPR	DESCRIPTION	DPT	PCS/ASY	OP. QTY	OVERLAP	S/U	STD	PROD STD	PROD HRS	START	DUE	IN
			INSPECTED BY: (RANOR Q.C.) Earl Hall DATE: 1-17-97											
			REF. P.S.I. QUALITY PLAN SEQ. N1											
			NO PSI INSPECTION REQUIRED.											
80	AF1	400	Welding Assembly-Fitting	AS	1.00		15		.00		30.00	1/24/97	1/27/97	
			FIT-UP THE 14" NOZZLES TO THE UPPER SHELL.											
			BY: ST DATE: 1/17/97											
85	WE1	466	PAW / GTAW-SS	WE	1.00		15		.00		60.00	1/27/97	1/31/97	
			WELD THE 14" DIA. NOZZLES TWO PLACES, PER DRAWING DETAIL 5, AND WELD MAP.											
			BY: MW DATE: 1-17-97											
90	QC2	573	Visual Inspection	QC	1.00		15		.00		30.00	1/31/97	2/03/97	
			INSPECT THE WELDING OF THE 14" NOZZLES TO THE UPPER SHELL											
			INSPECTED BY: (RANOR Q.C.) [signature] DATE: 1-22-97											
			REF. P.S.I. QUALITY PLAN SEQ. J1.											
95	WE1	466	GTAW-SS	WE	1.00		15		.00		10.00	2/03/97	2/04/97	
			WELD ITEM 9 FLANGE ASSEMBLIES TO UPPER SHELL PER DRAWING DETAIL 5, AND WELD MAPS.											
			BY: MW DATE: 1-17-97											
100	QC2	573	Visual Inspection	QC	1.00		15		.00		60.00	2/04/97	2/07/97	
			INSPECT WELDING OF FLANGES PER DRAWING, & WELD MAP.											
			INSPECTED BY:(RANOR Q.C.) _____ DATE: _____											
			REF. P.S.I. QUALITY PLAN SEQ. P1											

PROG: JC4...

USER: DRB

ROUTING SHEET

--- SHOP COPY ---

PAGE: 7
DATE: 9/2(
TIME: 11.0(

COMPANY: 1 RANOR, INC.

JOB/LOT NUMBER	JOB DESC.	PART NUMBER	PART DESCRIPTION	REV	- CODES - #	JOB	USER	CUSTOMER P.O.
7300FM	LIGO VACUMM CHAMBER	V049-4-101	PSI BEAM SPLITTER CHAMBERS					555822

LEVEL OF ASSY:	REV	PART NUMBER	PART DESCRIPTION	PROD QTY	START DATE	DUE DATE	PARENT LEVEL
2		V049-4-101 LEV 2	P.S.I. UPPER CHAMBER	15	9/17/96	2/13/97	

OPERATIONS:

SEQ	W/C	OPR	DESCRIPTION	DPT	PCS/ASY	OP. QTY	OVERLAP	S/U	STD	PROD STD	PROD HRS	START	DUE	IN
			NO PSI INSPECTION REQUIRED.											
105	FN1	500	STEAM CLEANING	FN	1.00	15		.00			60.00	2/07/97	2/13/97	

STEAM CLEAN WITH STEAM ONLY AND PREP FOR SHIPPMENT.

BY: _____ DATE: 1-29-97

NEXT LEVEL OF ASSEMBLY LEVEL 1 FOR THE WELDING OF THE UPPER CYLINDER TO THE FLANGE

PROG: JC4100 **PRODUCTION** ROUTING SHEET Level 2A Units 1 - 5 PAGE: 2
USER: DRB --- SHOP COPY --- DATE: 9/30
TIME: 11.30

COMPANY: 1 RANOR, INC.

JOB/LOT NUMBER	JOB DESC.	PART NUMBER	PART DESCRIPTION	- CODES - REV #	JOB USER	CUSTOMER P.O.
7300FM	LIGO VACUMM CHAMBER	V049-4-101	PSI BEAM SPLITTER CHAMBERS			555822

LEVEL OF ASSY:	REV	PART NUMBER	PART DESCRIPTION	PROD QTY	START DATE	DUE DATE	PARENT LEVEL
2A		V049-4-101 LEV 2A	P.S.I. UPPER SHELL, & PORTS	15	10/23/96	2/14/97	

OPERATIONS:

SEQ	W/C	OPR	DESCRIPTION	DPT	PCS/ASY	OP. QTY	OVERLAP	S/U STD	PROD STD	PROD HRS	START	DUE	IN

THIS LEVEL IS FOR THE FABRICATION OF THE UPPER SHELL, ITEMS 4, PER DWG. # V049-4-003, AND THE B.O.M..

SPECIAL PRECAUTIONS MUST BE TAKEN TO AVOID ANY CARBON STEEL CONTACT WITH THE INSIDE OF THIS SHELL, & PORTS. NO OIL & OR HYDROCARBON CONTAMINATION IS ALLOWED.

NO AIR TOOLS CAN BE USED FOR PROCESSING THIS MATERIAL. USE ONLY ELECTRIC TOOLS, GRINDING IS ALLOWED PROVIDED THE GROUND EDGE IS CLEANED WITH A CARBIDE BURR. PLASMA CUT EDGES ALSO REQUIRE CARBIDE BURRING FOR REMOVAL OF BURNT EDGE.

ALL HEAT #'S MUST BE RECORDED, & MAINTAINED. PARTS MUST BE VIBRO-ETCHED ONLY ON THE O.D. . NO MARKINGS OF ANY TYPE ARE ALLOWED ON THE I.D., AND NO MAGIC MARKERS ARE ALLOWED ON THE O.D..

10	FC1	070	Plasma Cut	FC	1.00	15		.00		60.00	10/23/96	10/29/96	

PLASMA CUT UPPER SHELL PER B.O.M., & PROGRAM # 1

RECORD ALL HEAT NUMBERS ON EACH PART.

BY: RPG DATE: 09/26/96

dlb 9/30/96

20	BV1	200	Bevel to Spec.	BV	1.00	15		.00		90.00	10/29/96	11/06/96	

BEVEL THE LONG SEAM WELD PREP (both sides) PER DRAWING SHEET 3 DETAIL #9, AND SKETCH # 1.

SIGN OFF EACH SHELL AFTER PREP IS COMPLETE.

S/N 1 JG S/N 2 JG S/N 3 JG S/N 4 JG S/N 5 JG

WELD PREPS COMPLETE THIS LOT.

BY: JG DATE: 9/27/96

30	QC3	585	Dimensional Inspection	QC	1.00	15		.00		1.50			

INSPECT THE FINISHED WELD PREP PER SKETCH #1, SECTION A-A.

PROG: JC4100 **PRODUCTION** ROUTING SHEET PAGE: 3
USER: DRB --- SHOP COPY --- DATE: 9/30
TIME: 11.30

COMPANY: 1 RANOR, INC.

JOB/LOT NUMBER	JOB DESC.	PART NUMBER	PART DESCRIPTION	- CODES - REV #	JOB USER	CUSTOMER P.O. N
7300FM	LIGO VACUMM CHAMBER	V049-4-101	PSI BEAM SPLITTER CHAMBERS			555822

LEVEL OF ASSY:	REV	PART NUMBER	PART DESCRIPTION	PROD QTY	START DATE	DUE DATE	PARENT LEVEI
2A		V049-4-101 LEV 2A	P.S.I. UPPER SHELL, & PORTS	15	10/23/96	2/14/97	

OPERATIONS:

SEQ	W/C	OPR	DESCRIPTION	DPT	PCS/ASY	OP. QTY	OVERLAP	S/U STD	PROD STD	PROD HRS	START	DUE	IN
			RECORD EACH SERIAL NUMBER INSPECTED BELOW, & I.D. THE PART.										
			S/N JPM S/N JPM S/N JPM S/N JPM S/N JPM										
			ABOVE INSPECTIONS COMPLETED FOR THIS LOT.										
			BY: J P Magnan DATE: 9-28-96										
40	PB1	260	Bump - Start	PB	1.00	15		.00		90.00	11/06/96	11/14/96	
			BUMP START ENDS OF ITEM 4, FOR ROLLING PER SKETCH.										
			SIGN OFF EACH UNIT WHEN COMPLETED.										
			S/N 1 S/N 2 S/N 3 S/N 4 S/N 5										
			OPERATION COMPLETED FOR THIS LOT.										
			BY: DP DATE: 10/5/96										
50	RO1	300	Roll Forming	RO	1.00	15		.00		180.00	11/14/96	12/03/96	
			ROLL THE UPPER CYLINDER ITEM 4, PER SKETCH #1.										
			SIGN OFF EACH CYLINDER WHEN ROLLED										
			S/N 1 DP S/N DP S/N DP S/N DP S/N DP 9-27-96										
			OPERATION COMPLETED FOR THIS LOT OF PARTS.										
			BY: DP DATE: 10-7-96										
70	AF1	400	Welding Assembly-Fitting	AS	1.00	15		.00		120.00	12/03/96	12/12/96	
			FIT-UP, & ASSEMBLE THE UPPER SHELL ITEM 4 WITH FIXTURING AS REQUIRED. REF. DWG. SHEET 3, DET 9. MAXIMUM MIS-MATCH 1/16".										
			REF. RANOR WELD PROCEDURE T-P8-P8-1-PSI, REV. 0 (GTAW)										
			SIGN OFF EACH UNIT WHEN COMPLETE.										

PROG: JC4100 **PRODUCTION** ROUTING SHEET PAGE: 4
USER: DRB --- SHOP COPY --- DATE: 9/30
TIME: 11.30

COMPANY: 1 RANOR, INC.

JOB/LOT NUMBER	JOB DESC.	PART NUMBER	PART DESCRIPTION	- CODES - REV # JOB USER	CUSTOMER P.O. N
7300FM	LIGO VACUMM CHAMBER	V049-4-101	PSI BEAM SPLITTER CHAMBERS		555822

LEVEL OF ASSY:	REV	PART NUMBER	PART DESCRIPTION	PROD QTY	START DATE	DUE DATE	PARENT LEVEI
2A		V049-4-101 LEV 2A	P.S.I. UPPER SHELL, & PORTS	15	10/23/96	2/14/97	

OPERATIONS:

SEQ	W/C	OPR	DESCRIPTION	DPT	PCS/ASY	OP. QTY	OVERLAP	S/U STD	PROD STD	PROD HRS	START	DUE	IN

S/N_____ S/N_____ S/N 3-RR S/N_____ S/N_____

OPERATION COMPLETED FOR THIS LOT OF PARTS.

BY: _____ DATE: _____

75 QC2 560 Fit Up Inspection QC 1.00 15 .00 30.00 12/12/96 12/16/96

INSPECT FIT-UP OF WELD JOINTS:

MAX. ALIGNMENT TOL:
UP TO 1/2" PLATE 1/4 t.

REFERENCE WELD PROCEDURES FOR FIT-UP TOLERANCES .
SIGN OFF INSPECTION FOR EACH OF FIT-UPS CHECKED

S/N_____ S/N_____ S/N_____ S/N_____ S/N_____

OPERATION COMPLETED FOR THIS LOT OF PARTS.

INSP. BY: (RANOR Q.C.)_____ DATE: _____

P.S.I. INPROCESS INSPECTION NOT REQUIRED.

REF. P.S.I. QUALITY PLAN INSPECTION SEQ. G1

80 WE1 466 PAW -SS WE 1.00 15 .00 600.00 12/16/96 2/07/97

ALL WELDING BY QUALIFIED WELDERS ONLY.

WELD USING GTAW, & PAW PROCESSES LISTED BELOW:

SIGN OFF WELDING ON EACH OF THE CYLINDERS INDIVIDUAL
WELD MAP FOR EACH SERIAL NO.

SIGN OFF EACH SERIAL NUMBER WELDED.

S/N 1 W S/N 2 WW S/N 3 RR S/N 4 W S/N 5 W

P-P8-P8-2, REV.0 (PAW)

T-P8-P8-PSI, REV.0 (GTAW)

PROG: JC4100 PRODUCTION

USER: DRB

ROUTING SHEET

--- SHOP COPY ---

PAGE: 6
DATE: 9/30
TIME: 11.30

COMPANY: 1 RANOR, INC.

JOB/LOT NUMBER	JOB DESC.	PART NUMBER	PART DESCRIPTION	REV	- CODES - #	JOB USER	CUSTOMER P.O. N
7300FM	LIGO VACUMM CHAMBER	V049-4-101	PSI BEAM SPLITTER CHAMBERS				555822

LEVEL OF ASSY: 2A	REV	PART NUMBER	PART DESCRIPTION	PROD QTY	START DATE	DUE DATE	PARENT LEVEI
		V049-4-101 LEV 2A	P.S.I. UPPER SHELL, & PORTS	15	10/23/96	2/14/97	

OPERATIONS:

SEQ	W/C	OPR	DESCRIPTION	DPT	PCS/ASY	OP. QTY	OVERLAP	S/U	STD	PROD STD	PROD HRS	START	DUE	IN
			S/N_____ S/N_____ S/N_____ S/N_____ S/N_____											
			INSPECTION COMPLETED FOR THIS LOT OF PARTS.											
			INSP. BY: (RANOR Q.C.)_____ DATE: _____											
			INSP. BY: (PROCESS SYS.)_____ DATE:_____ REF. P.S.I. INSPECTION QUALITY PLAN SEQ. # H1											
130	FN1	480	Steam Clean Parts, Protect	FN	1.00	15			.00		30.00	2/13/97	2/14/97	
			STEAM CLEAN PARTS, AND PROTECT WITH PLASTIC. STORE PARTS IN PROCESS SYSTEMS " clean room " .											
			RECORD SERIAL NUMBER OF CYLINDER CLEANED.											
			S/N_____ S/N_____ S/N_____ S/N_____ S/N_____											
			NEXT LEVEL OF ASSEMBLY: LEVEL 2											

PROG: JC4100 PRODUCTION

USER: DRB

ROUTING SHEET

--- SHOP COPY ---

PAGE: 5
DATE: 9/3(
TIME: 11.3(

COMPANY: 1 RANOR, INC.

JOB/LOT NUMBER	JOB DESC.	PART NUMBER	PART DESCRIPTION	REV	- CODES - #	JOB USER	CUSTOMER P.O. N
7300FM	LIGO VACUMM CHAMBER	V049-4-101	PSI BEAM SPLITTER CHAMBERS				555822

LEVEL OF ASSY: 2A	REV	PART NUMBER	PART DESCRIPTION	PROD QTY	START DATE	DUE DATE	PARENT LEVEI
		V049-4-101 LEV 2A	P.S.I. UPPER SHELL, & PORTS	15	10/23/96	2/14/97	

OPERATIONS:

SEQ	W/C	OPR	DESCRIPTION	DPT	PCS/ASY	OP. QTY	OVERLAP	S/U STD	PROD STD	PROD HRS	START	DUE	IN
			OPERATION COMPLETED FOR THIS LOT OF PARTS.										
			BY: _____ DATE: _____										
90	QC3	573	Visual Inspection	QC	1.00	15		.00		30.00	2/07/97	2/10/97	
			INSPECT WELDS PER DRAWING AND SPECS. MAXIMUM RE-INFORCEMENT 3/16" to 1/2" MAT'L" IS 3/32"										
			SIGN OFF ON EACH OF THE INDIVIDUAL INSPECTION REPORTS.										
			RECORD WHICH CYLINDERS HAVE BEEN INSPECTED HERE:										
			S/N_____ S/N_____ S/N_____ S/N JPM S/N JPM										
			INSP. BY: (RANOR Q.C.)_____ DATE:_____										
			INSP. BY (PROCESS SYS.)_____ DATE:_____										
			REF. P.S.I. QUALITY PLAN SEQUENCE G1										
100	RO1	310	Reroll Forming	RO	1.00	15		.00		10.00	2/11/97	2/11/97	
			RE-ROUND ITEM #4 UPPER SHELL WITHIN 1/16"										
			RECORD SERIAL NUMBERS WHICH HAVE BEEN REROUNDED										
			S/N DP S/N DP S/N DP S/N DP S/N DP										
			OPERATION COMPLETED FOR THIS LOT OF PARTS.										
			BY: DP DATE: 1-21-97										
120	QC3	585	Dimensional Inspection	QC	1.00	15		.00		30.00	2/11/97	2/13/97	
			INSPECT FINAL FABRICATION OF ITEMS 4. (roundness)										
			RECORD THE I.D., & PIE TAPE THE O.D. FOR MATCHING TO THE FORMED HEAD.										
			RECORD SERIAL NUMBER OF INSPECTED PART.										

PROG: JC4100 **PRODUCTION** ROUTING SHEET Level 2C Units 1 - 5 PAGE: 2
USER: DRB --- SHOP COPY --- DATE: 9/27
TIME: 9.15

COMPANY: 1 RANOR, INC.

JOB/LOT NUMBER	JOB DESC.	PART NUMBER	PART DESCRIPTION	- CODES - REV # JOB USER	CUSTOMER P.O. N
7300FM	LIGO VACUMM CHAMBER	V049-4-101	PSI BEAM SPLITTER CHAMBERS		555822

LEVEL OF ASSY:	REV	PART NUMBER	PART DESCRIPTION	PROD QTY	START DATE	DUE DATE	PARENT LEVEI
2C		V049-4-101 LEV 2C	P.S.I. UPPER SHELL MISC. PARTS	15	12/19/96	2/14/97	

OPERATIONS:

SEQ	W/C	OPR	DESCRIPTION	DPT	PCS/ASY	OP. QTY	OVERLAP	S/U STD	PROD STD	PROD HRS	START	DUE	IN

THIS LEVEL IS FOR THE FABRICATION OF THE UPPER FLANGE, & MISC. PARTS FOR THE TOP SHELL. REF. DWR. V049-4-003 SHT 2. AND 104 1/2" I.D. FLANGE DETAIL DWG. # V049-4-041. (item 6)

SPECIAL PRECAUTIONS MUST BE TAKEN TO AVOID ANY CARBON STEEL CONTACT WITH THE INSIDE OF THIS VESSEL. NO OILS, & OR HYDROCARBON CONTAMINATION IS ALLOWED.

NO AIR TOOLS CAN BE USED FOR PROCESSING THIS MATERIAL. USE ONLY ELECTRIC TOOLS. GRINDING IS PERMISSIBLE PROVIDED THE SURFACE IS CLEANED WITH A CARBIDE BURR AFTER. ALL PLASMA CUT SURFACES MUST ALSO BE CARBIDE BURRED.

ALL HEAT NO.'S MUST BE RECORDED, & MAINTAINED. PARTS MUST BE VIBRO -ETCHED ON THE O.D. ONLY. NO MARKINGS ON THE I.D. AT ALL, AND NO MAGIC MARKER ON THE O.D. MARKING ON THE O.D. ONLY ON 3M BRAND YELLOW NUCLEAR TAPE # 483, PURCHASED FOR THIS JOB.

ALL MATERIAL SUPPLIED BY THE CUSTOMER
MAT'L: 304 L, STAINLESS STEEL

WELDING BY QUALIFIED PERSONELL ONLY USING GTAW, & PAW IN ACCORDANCE WITH PROCEDURES: P-P8-P8-1, REV 0, AND T-P8-P8-PSI, REV. 0

SEQ	W/C	OPR	DESCRIPTION	DPT	PCS/ASY	OP. QTY	OVERLAP	S/U STD	PROD STD	PROD HRS	START	DUE	IN
10	FC1	070	Plasma Cut	FC	1.00	15		.00		90.00	12/19/96	12/31/96	

PLASMA CUT PARTS PER B.O.M., & DNC'S.

NOTE:
MATERAL FOR PARTS # 18, 18, 50, & 63 MUST BE TAKEN FROM THE 59 1/2" DIA. DROPS FROM THE LOWER SHELL PORTS. THIS STOCK HAS A 52 1/4" INSIDE RADIUS.

THIS STOCK MUST BE TILTED TO A NEUTRAL CENTERLINE AND PARTS BURN'T LINED UP WITH THE CENTERLINE OF THE PART. SEE DNC'S, AND SKETCHES 4, & 5.

BY: Reg DATE: 1-2-97

PROG: JC4100 PRODUCTION ROUTING SHEET PAGE: 3
USER: DRB --- SHOP COPY --- DATE: 9/27
TIME: 9.15

COMPANY: 1 RANOR, INC.

JOB/LOT NUMBER	JOB DESC.	PART NUMBER	PART DESCRIPTION	REV	- CODES - # JOB USER	CUSTOMER P.O.
7300FM	LIGO VACUMM CHAMBER	V049-4-101	PSI BEAM SPLITTER CHAMBERS			555822

LEVEL OF ASSY: 2C	REV	PART NUMBER	PART DESCRIPTION	PROD QTY	START DATE	DUE DATE	PARENT LEVEL
		V049-4-101 LEV 2C	P.S.I. UPPER SHELL MISC. PARTS	15	12/19/96	2/14/97	

OPERATIONS:

SEQ	W/C	OPR	DESCRIPTION	DPT	PCS/ASY	OP. QTY	OVERLAP	S/U	STD	PROD STD	PROD HRS	START	DUE	IN
20	S01	150	Saw Cut	SW	1.00	15			.00		30.00	12/31/96	1/03/97	

N/A JAB

SAW CUT ITEM 17 PER B.O.M. & SKETCH #3.

BY: _____ DATE: _____

25	FN1	502	Clean Edges For Assembly	FN	1.00	15			.00		60.00	1/03/97	1/08/97	

CLEAN EDGES OF PLASMA CUT PARTS USING CARBIDE BURRS
ALL PARTS MUST FIT FLUSH, NO SLAG ALLOWED.

BY: _____ DATE: _____

30	RO1	320	Pullmax Bar Roll	RO	1.00	15			.00		60.00	1/08/97	1/14/97	

N/A . JAB

NOTE: THIS STOCK MAY BE ALREADY ROLLED

ROLL ITEM 17 PER SKETCH, IN HALVES, IF REQUIRED.

BY: _____ DATE: _____

35	EM2	600	Programming	EM	1.00	15			.00		30.00	1/14/97	1/16/97	

PROGRAM BOTTOM FLANGE ITEM # 6, PER DRAWING # V049-4-041

40	VC1	645	Turning	VB	1.00	15			.00		90.00	1/16/97	1/23/97	

NO OILS OR CARBON STEEL CAN COME IN CONTACT WITH THIS MATERIAL. USE CLEAN COOLANT "CINCINNATI MILICRON " CIMTECK 410 ONLY FOR MACHINING COOLANT / LUBRICATION.

N/A JAB

TURN COMPLETE PER DRAWING V-049-4-041, & PROGRAM INSTRUCTIONS.

NOTE: THE CIRCULAR LAY REQUIRED ON THE SEALING FACE, IS THE MOST CRITICAL FEATURE.

PROTECT ALL FINISHED SURFACES WITH CLEAN OUTDOOR CARPETING PURCHASED FOR THIS JOB.

BY: _____ DATE: _____

PROG: JC4100

USER: DRB

ROUTING SHEET

--- SHOP COPY ---

PAGE: 4
DATE: 9/27
TIME: 9.15

COMPANY: 1 RANOR, INC.

JOB/LOT NUMBER	JOB DESC.	PART NUMBER	PART DESCRIPTION	REV	- CODES - # JOB USER	CUSTOMER P.O. N
7300FM	LIGO VACUMM CHAMBER	V049-4-101	PSI BEAM SPLITTER CHAMBERS			555822

LEVEL OF ASSY: 2C	REV	PART NUMBER	PART DESCRIPTION	PROD QTY	START DATE	DUE DATE	PARENT LEVEI
		V049-4-101 LEV 2C	P.S.I. UPPER SHELL MISC. PARTS	15	12/19/96	2/14/97	

OPERATIONS:

SEQ	W/C	OPR	DESCRIPTION	DPT	PCS/ASY	OP. QTY	OVERLAP	S/U STD	PROD STD	PROD HRS	START	DUE	IN
45	R1	635	Drill	RD	1.00	15		.00		22.50	1/23/97	1/24/97	

DRILL 2X, 1/8" VENT HOLES IN ITEM # 18, PER DRAWING.
SHEET 2, DETAIL 19.

BY: WH DATE: 12/1/96

55	BV1	200	Bevel to Spec.	BV	1.00	15		.00		45.00	1/24/97	1/29/97	

BEVEL ENDS OF ITEM # 17 PER SKETCH # 3

BY: WH DATE: 12/1/96

60	AF1	400	Welding Assembly-Fitting	AS	1.00	15		.00		60.00	1/29/97	2/03/97	

N/A JAB FIT-UP ENDS OF ITEM 17 TO FORM A 360 DEG. STIFFENER.
SEE SHEET 4, DETAIL 18, SKETCH # 3, & WELD MAP.

BY: _____ DATE: _____

65	WE1	466	PAW -SS	WE	1.00	15		.00		45.00	2/03/97	2/06/97	

N/A JAB WELD STIFFENER PER DRAWING, & SKETCH.

REF. RANOR WELD PROCEDURES, & WELD MAP.

ALL WELDING BY QUALIFIED WELDERS ONLY SEE APPROVED
PROCEDURES LISTED ABOVE, AND MATERIAL HANDLING CAUTIONS.

BY: _____ DATE: _____

70	QC3	585	Dimensional Inspection	QC	1.00	15		.00		60.00	2/06/97	2/11/97	

N/A JAB INSPECT FINISH PARTS PRIOR TO WELDING PER DRAWING
AND SKETCHES.

INSP. BY (RANOR Q.C.)_____ DATE: _____

75	FN1	480	Steam Clean Parts	FN	1.00	15		.00		60.00	2/11/97	2/14/97	

STEAM CLEAN PARTS AND PROTECT WITH PLASTIC. STORE PARTS
IN THE PROCESS SYSTEMS " clean room".

PROG: JC4100

USER: DRB

ROUTING SHEET

--- SHOP COPY ---

PAGE: 5
DATE: 9/27
TIME: 9.15

COMPANY: 1 RANOR, INC.

JOB/LOT NUMBER	JOB DESC.	PART NUMBER	PART DESCRIPTION	REV	- CODES - #	JOB	USER	CUSTOMER P.O.
7300FM	LIGO VACUMM CHAMBER	V049-4-101	PSI BEAM SPLITTER CHAMBERS					555822

LEVEL OF ASSY:	REV	PART NUMBER	PART DESCRIPTION	PROD QTY	START DATE	DUE DATE	PARENT LEVEL
2C		V049-4-101 LEV 2C	P.S.I. UPPER SHELL MISC. PARTS	15	12/19/96	2/14/97	

OPERATIONS:

SEQ	W/C	OPR	DESCRIPTION	DPT	PCS/ASY	OP. QTY	OVERLAP	S/U STD	PROD STD	PROD HRS	START	DUE	IN

BY: JB DATE: -OnGoing

NEXT LEVEL OF ASSEMBLY LEVEL 2

PROG: JC4100

USER: DRB

ROUTING SHEET

--- SHOP COPY ---

Level 2D

Units 1 - 5

PAGE: 2

DATE: 9/26

TIME: 11.38

COMPANY: 1 RANOR, INC.

JOB/LOT NUMBER	JOB DESC.	PART NUMBER	PART DESCRIPTION	- CODES - REV #	JOB USER	CUSTOMER P.O.
7300FM	LIGO VACUMM CHAMBER	V049-4-101	PSI BEAM SPLITTER CHAMBERS			555822

LEVEL OF ASSY: 2D	REV	PART NUMBER	PART DESCRIPTION	PROD QTY	START DATE	DUE DATE	PARENT LEVEL
		V049-4-101 LEV 2D	P.S.I. UP. FLNG-ASSY PRE-MACH.	15	11/26/96	2/14/97	

OPERATIONS:

SEQ	W/C	OPR	DESCRIPTION	DPT	PCS/ASY	OP. QTY	OVERLAP	S/U STD	PROD STD	PROD HRS	START	DUE	IN

THIS LEVEL 2D, IS FOR THE MACHINING OF THE UPPER SHELL FLANGE ASSEMBLIES FOR FIT-UP TO THE MAIN SHELL.

SPECIAL PRECAUTIONS MUST BE TAKEN TO AVOID CARBON STEEL CONTACT WITH THE INSIDE OF THIS VESSEL. ALSO NO OILS, AND OR HYDROCARBON CONTAMINATION OF ANY TYPE IS ALLOWED.

WELDING BY QUALIFIED WELDERS ONLY USING GTAW, & PAW IN ACCORDANCE WITH PROCEDURES: P-P8-P8-1, REV 0, AND T-P8-P8-PSI , REV.0 .

NO AIR TOOLS CAN BE USED FOR PROCESSING THIS MATERIAL, USE ONLY ELECTRIC TOOLS. GRINDING IS ALLOWED PROVIDED THE AREA IS CLEANED WITH A CARBIDE BURR. PLASMA CUT EDGES ALSO REQUIRE CARBIDE BURRING.

ALL HEAT NO'S MUST BE RECORDED, & MAINTAINED .
PARTS ARE TO BE VIBRO-ETCHED ON THE O.D. ONLY.
NO MARKINGS AT ALL ON THE I.D., AND NO MAGIC MARKERS ON THE O.D.. *MARKING ON THE O.D. ON 3M YELLOW NUCLEAR TAPE #* 483 PURCHASED FOR THIS JOB. MARK ON THIS TAPE ONLY.

MATERIAL: 304 L SUPPLIED BY THE CUSTOMER.

NOTE:
THESE ARE FINISHED MACHINED PARTS USE CAUTION AND PROTECT THE FLANGES, & I.D. FROM DAMAGE AND CONTAMINATION WITH OIL.

SEQ	W/C	OPR	DESCRIPTION	DPT	PCS/ASY	OP. QTY	OVERLAP	S/U STD	PROD STD	PROD HRS	START	DUE	IN
10	S01	150	Saw Cut	SW	1.00	15		.00		450.00	11/26/96	1/10/97	

USE CAUTION TO AVOID DAMAGING FINISHED MACHINED FLANGES.

SAW CUT ITEMS 9 A PER B.O.M. ,& DRAWING FOR MACHINIG

SAW PIPE OVERSIZED PER SKETCH.#1

BY: L.O. DATE: 12/1/96

SEQ	W/C	OPR	DESCRIPTION	DPT	PCS/ASY	OP. QTY	OVERLAP	S/U STD	PROD STD	PROD HRS	START	DUE	IN
15	M1	615	Machine per print	MI	1.00	15		.00		300.00	1/10/97	2/04/97	

PROG: JC4100
USER: DRB

R O U T I N G S H E E T

--- SHOP COPY ---

PAGE: 3
DATE: 9/26
TIME: 11.38

COMPANY: 1 RANOR, INC.

JOB/LOT NUMBER	JOB DESC.	PART NUMBER	PART DESCRIPTION	REV #	- CODES - JOB USER	CUSTOMER P.O. N
7300FM	LIGO VACUMM CHAMBER	V049-4-101	PSI BEAM SPLITTER CHAMBERS			555822

LEVEL OF ASSY: 2D REV	PART NUMBER	PART DESCRIPTION	PROD QTY	START DATE	DUE DATE	PARENT LEVEL
	V049-4-101 LEV 2D	P.S.I. UP. FLNG-ASSY PRE-MACH.	15	11/26/96	2/14/97	

OPERATIONS:

SEQ	W/C	OPR	DESCRIPTION	DPT	PCS/ASY	OP. QTY	OVERLAP	S/U	STD	PROD STD	PROD HRS	START	DUE	IN
			USE ONLY CLEAN CINCINNATI MILICRON CIMTECK 410 FOR MACHINE COOLANT.											
			PRE-MACHINE ITEMS 9A, PER DRAWING, FOR FIT-UP TO THE CYLINDER. PER DRAWING SHEET 3 DETAIL 13., AND SKETCH #1											
			BY: J.L. DATE: 1/2/97											
20	PB1	265	Reround	PB	1.00	15			.00		60.00	2/04/97	2/07/97	
			N/A - JOB REROUND THE TUBE END ONLY AFTER MACHINIG THE FIT-UP.											
			BY: _____ DATE: _____											
25	FN1	500	Steam Cleaning	FN	1.00	15			.00		90.00	2/07/97	2/14/97	
			STEAM CLEAN USING " OAKITE " 1300 , FOLLOWED BY CLEAN STEAM											
			BY: _____ DATE: _____											
			NEXT LEVEL OF ASSEMBLY: LEVEL 2											

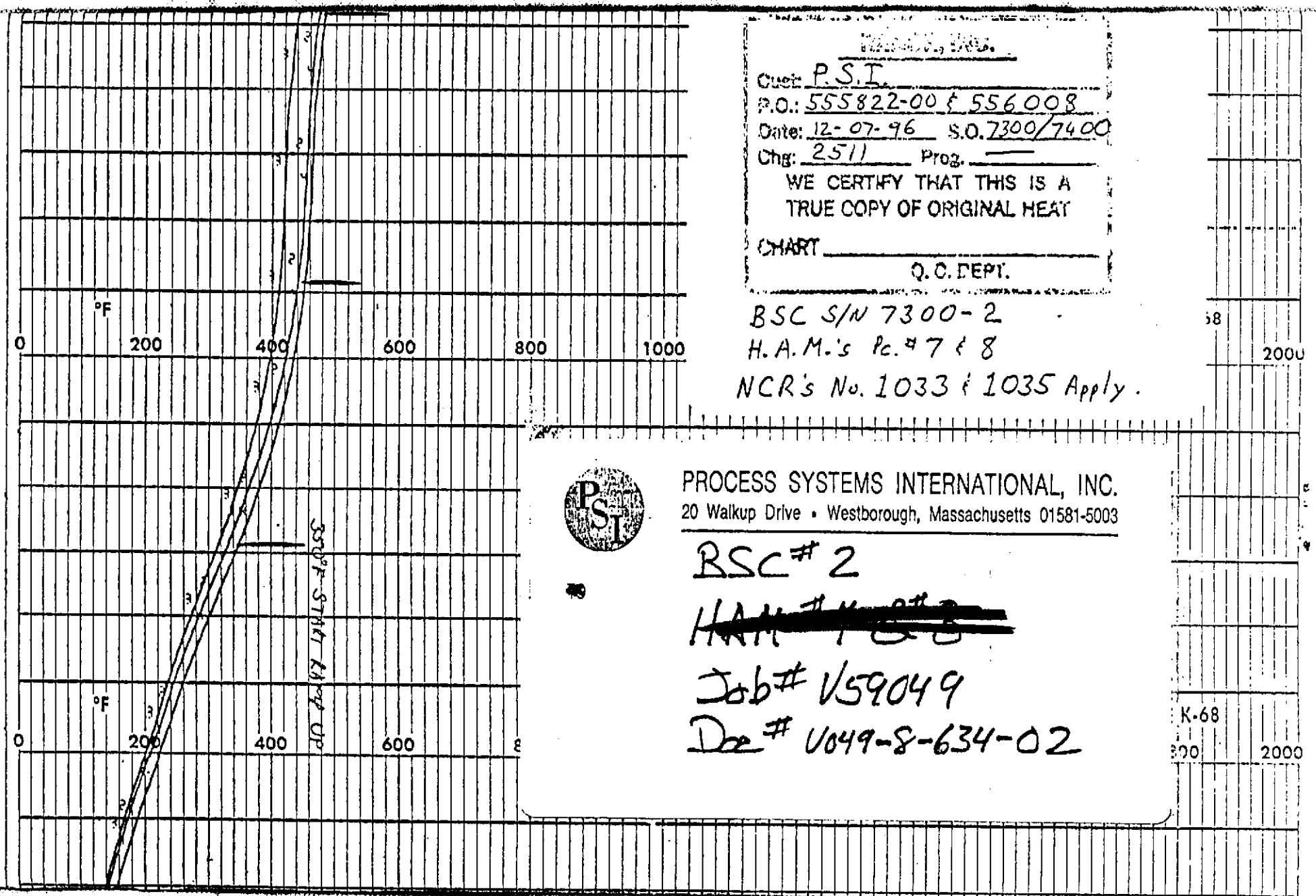

Cust: P.S.I.
P.O.: 555822-00 & 556008
Date: 12-07-96 S.O. 7300/7400
Chg: 2511 Prog. —
WE CERTIFY THAT THIS IS A TRUE COPY OF ORIGINAL HEAT
CHART
Q.C. DEPT.

BSC S/N 7300-2
H.A.M.'s Pc.# 7 & 8
NCR's No. 1033 & 1035 Apply.

PROCESS SYSTEMS INTERNATIONAL, INC.
20 Walkup Drive • Westborough, Massachusetts 01581-5003

BSC # 2
HAM # [redacted]
Job # V59049
Doc # V049-8-634-02

#4

HYSPAN Metal Bellows

N/A

BSC 2

Title

SPECIFICATION FOR CLEANING PROCEDURE

Attachment

LIGO COMPONENT CLEANING DATA SHEET

Project V59049

Component	Serial Number
BSC #2 TOP	2 **
Bottom	2
Covers PROTO PROTO	PROTO PROTO
PROTO A-11	PROTO 03

Wash Cycle: Manual

Flowrates: 30 gpm Max. Temp.: 146° Duration: 3 hrs

Operator: MERRET M. JIM MURPHY Date: 4-8-97

Comments: DURING THE CLEANING OF BSC 2 TOP HALF RUST, AND OTHER CONTAMINATION FROM SUCTION CUP LIFTING DEVICES, WAS FOUND * →

Component(s) Inspected By: [signature] Date: 4/8/97

Quality Assurance: [signature] Date: 4-14-97

Comments:

Number

Rev.

SPECIFICATION

Number A V049-2-015 Rev. 2

* RUST MARKS AND OTHER CONTAMINANTS WERE REMOVED BY PASSIVATION. THE PROCESS TOOK APP. 1.5 HOURS.

** (4107) UPON FINAL ASSEMBLY OF BSC #2 RUST, AND METAL PARTICLES WERE FOUND PRESENT IN THE BOTTOM PORTION OF THE VESSEL. BSC WAS WIPED DOWN WITH ALCOHOL.

Top

LIGO DATA SHEET
MANUAL WASH STATION

PART DESCRIPTION: BSC/Top S/N: 2 WORK ORDER: 159049-107
DATE/TIME: 9/12/97
OPERATOR: Merritt

REMOVE ALL TIE-RODS:

1.FILL D.I. WATER TANK XD-103 TO MARK.HEAT D.I. WATER USING PUMP XP-103 AND HTR.XP-102 TO 150.F. TI925= 145 F

2.FILL POWER WASHER TANK WITH A 50% SOLUTION OF IMPRO CLEAN 1300 AND D.I. WATER. MIX 1:1 ✓

3.APPLY SOAP SOLUTION TO ALL COMPONENT SURFACES WITH LARGE YELLOW NOZZLE IN POWER WASHER WAND AND SIPHON TUBE IN THE POWER WASHER TANK.

4.HAND SCRUB SURFACES WITH NYLON BRUSH WHERE NEEDED.

5.REMOVE SIPHON TUBE FROM TANK AND INSTALL GREEN NOZZLE INTO WAND.

6.POWER WASH COMPONENT. ALL SURFACES SLOWLY COVERED AT LEAST TWICE. WASH TIME = 60 MIN

7.POWER RINSE COMPONENT. ALL SURFACES SLOWLY COVERED AT LEAST TWICE. RINSE TIME= 180 MIN

8.REMOVE EXCESS WATER WITH VACUUM OR CLEAN AIR WAND.

9.ALLOW COMPONENT TO DRY BEFORE MOVING TO CLEAN ROOM. DRY TIME= 24 0 MIN

NOTES: Used Auto Wash For Vessel Wash up-

SPECIFICATION Number A1049-2-184 Rev. 4

BSC 2 Top

Bottom

LIGO DATA SHEET
MANUAL WASH STATION

PART DESCRIPTION: BSC Bottom S/N: 2 WORK ORDER: U59049.101
DATE/TIME: 4/7/97
OPERATOR: Joseph

REMOVE ALL TIE-RODS:

1.FILL D.I. WATER TANK XD-103 TO MARK.HEAT D.I. WATER USING PUMP XP-103 AND HTR.XP-102 TO 150.F. TI925= 146 F

2.FILL POWER WASHER TANK WITH A 50% SOLUTION OF IMPRO CLEAN 1300 AND D.I. WATER. MIX 1:1 ✓

3.APPLY SOAP SOLUTION TO ALL COMPONENT SURFACES WITH LARGE YELLOW NOZZLE IN POWER WASHER WAND AND SIPHON TUBE IN THE POWER WASHER TANK.

4.HAND SCRUB SURFACES WITH NYLON BRUSH WHERE NEEDED.

5.REMOVE SIPHON TUBE FROM TANK AND INSTALL GREEN NOZZLE INTO WAND.

6.POWER WASH COMPONENT. ALL SURFACES SLOWLY COVERED AT LEAST TWICE. WASH TIME = ~~[illegible]~~ 25 MIN

7.POWER RINSE COMPONENT. ALL SURFACES SLOWLY COVERED AT LEAST TWICE. RINSE TIME= 60 MIN

8.REMOVE EXCESS WATER WITH VACUUM OR CLEAN AIR WAND.

9.ALLOW COMPONENT TO DRY BEFORE MOVING TO CLEAN ROOM. DRY TIME= 180 MIN

NOTES:

SPECIFICATION
Number AV049-2-184 Rev. 0
Page 2 of 2

BSC 2 Bot.

LIGO DATA SHEET
MANUAL WASH STATION

Covers

D14-Proto A11-03
014-Proto

PART DESCRIPTION: Covers S/N: 014-Proto WORK ORDER: V59049-107
DATE/TIME: 3/31/97
OPERATOR: Joseph - MERRITT

NOTE:REMOVE ALL TIE RODS PRIOR TO WASHING

1.FILL D.I. WATER TANK XD-103 TO MARK.HEAT D.I. WATER USING PUMP XP-103 AND HTR.XP-102 TO 150.F. TI925= 145 F

2.FILL POWER WASHER TANK WITH A 50% SOLUTION OF IMPRO CLEAN 1300 AND D.I. WATER. MIX 1:1 /

3.APPLY SOAP SOLUTION TO ALL COMPONENT SURFACES WITH LARGE YELLOW NOZZLE IN POWER WASHER WAND AND SIPHON TUBE IN THE POWER WASHER TANK.

4.HAND SCRUB SURFACES WITH NYLON BRUSH WHERE NEEDED.

5.REMOVE SIPHON TUBE FROM TANK AND INSTALL GREEN NOZZLE INTO WAND.

6.POWER WASH COMPONENT. ALL SURFACES SLOWLY COVERED AT LEAST TWICE. WASH TIME = 25 MIN

7.POWER RINSE COMPONENT. ALL SURFACES SLOWLY COVERED AT LEAST TWICE. RINSE TIME= 40 MIN

8.REMOVE EXCESS WATER WITH VACUUM OR CLEAN AIR WAND.

9.ALLOW COMPONENT TO DRY BEFORE MOVING TO CLEAN ROOM. DRY TIME= 6 ~~HR~~ MIN

NOTES: Rewash Covers AFTER grinding OFF Rust SPOTS.
Replace 1 Lifting 1 on Proto Cover

BSC #2 Covers

Title

SPECIFICATION
Number A V049-2-184
Rev. 1

Page 2 of 2

Number | Rev.

TITLE	TEST ARTICLE PARAMETERS PUMPDOWN LOG
DATE:	
TIME:	
TEST I.D.: e.g. WBSC1_1	WBSC2_1
PSI TEST ENGINEER:	
QUALITY ASSURANCE:	

PHYSICAL DIMENSIONS				
S.S. SURFACE AREA		ft^2		cm^2
VITON LINEAL LENGTH		inches		cm
VOLUME		ft^3		liters

PUMPDOWN	TIME		PRESSURE	(COLD CATHODE)
5/18/97	2240	hr:min	1.2×10^{-4}	Torr
5/19/97	0615	hr:min	1.2×10^{-5}	Torr
5/19/97	1200	hr:min	1.0×10^{-5}	Torr
5/20/97	0700	hr:min	4.2×10^{-6}	Torr
5/20/97	1530	hr:min	3.8×10^{-6}	Torr
5/21/97	1145	hr:min	5.3×10^{-7}	Torr
5/21/97	1350	hr:min	1.14×10^{-7}	Torr
5/21/97	1700	hr:min	1.1×10^{-8}	Torr
5/21/97	1740	hr:min	9.8×10^{-9}	Torr
5/21/97	1757	hr:min	1.7×10^{-8} *	Torr
		hr:min		Torr
		hr:min		Torr
		hr:min		Torr
		hr:min		Torr
		hr:min		Torr
		hr:min		Torr
		hr:min		Torr
		hr:min		Torr
		hr:min		Torr

* STABIL ION GAUGE

TITLE	BAKE OUT TEMPERATURE LOG
DATE:	
TIME:	
TEST I.D.: e.g. WBSC1_1	WBSC2_1
PSI TEST ENGINEER:	
QUALITY ASSURANCE:	

BAKEOUT LOG / DATE	TIME		TEMPERATURE		
5/18/97	2240	hr:min	56	°C	ANAFAZE 100°C
5/19/97	0615	hr:min	140	°C	
5/19/97	1200	hr:min	170	°C	
5/20/97	0700	hr:min	168	°C	165°C
5/20/97	1530	hr:min	168	°C	
5/21/97	1145	hr:min	84	°C	80.
5/21/97	1315	hr:min	60	°C	
		hr:min		°C	
		hr:min		°C	
		hr:min		°C	
		hr:min		°C	
		hr:min		°C	
		hr:min		°C	
		hr:min		°C	
		hr:min		°C	
		hr:min		°C	
		hr:min		°C	
		hr:min		°C	
		hr:min		°C	
		hr:min		°C	
		hr:min		°C	

TITLE	RGA ION SOURCE SETTINGS SHEET
DATE:	
TIME:	
TEST I.D.: e.g. WBSC1_1	WBSC2-1
PSI TEST ENGINEER:	
QUALITY ASSURANCE:	

RGA NUMBER:	
RGA SENSOR HEAD SERIAL # QMS	V010
RGA ELECTRONICS UNIT SERIAL # QME	13

Type	CH-TRON
Channel	0 ENABLE

IS-TYPE: HS-THOR.

Detector	
Type	CH-TRON
SEM Volt.	<< 1700>>

Amplifier	
Offset	ON

RF-Polarity	inverse
IS-Voltages	[V]
IonRef	138
Cathode	90.0
Focus	9.38
Field Axis	5.75
Extract	12

Mass	
Mode	SCAN-N
First	
Width	
Speed	
Resolution	
Threshold	-

Ion Source	
Filament #	
IS-Set	

IS-Emission	
Emiss [mA]	
Protect [A]	3.5

Fil.Prot.	Thresh. [mbar]
ON below	
OFF above	

SPECIFICATION	
Number: V049-2-127 A	Rev.1

TITLE	RGA SCAN PARAMETER FILE SETTINGS
DATE:	
TIME:	
TESTI.D.: e.g. WBSC1_1	
PSI TEST ENGINEER:	
QUALITY ASSURANCE:	
RGA NUMBER:	
RGA SENSOR HEAD SERIAL # QMS	V010
RGA ELECTRONICS UNIT SERIAL # QME	13

PARAMETER FILE: LIGO200.SAP

Load-Ch:00	CH-0	
State	ENABLE	
Det. Type	CH-TRON	
Mass Mode	SCAN-F	
First Mass	0.00	

Detector

EM Voltage	1700	

Mass

Speed	5 s	
Width	200	
Resolution	25	
Threshold	1E-15	

Amplifier

Amp. Mode	AUTO	
Amp. Range	—	
Range-L	—	
Pause - Cal.	1.0	
Offset	ON	

PARAMETER FILE: LIGO200.SBP

Load-Ch:00	CH-0	
State	ENABLE	
Det. Type	CH-TRON	
Mass Mode	SCAN-F	
First Mass	0.00	

SEM Voltage	1700	

Speed	5 s	
Width	200	
Resolution	25	

Amp. Mode	AUTO	
Amp. Range	—	
Range-L	—	
Pause - Cal.	1.0	
Offset	ON	

OUTPUT: User discretion
DISPLAY: User discretion

ITLE	OUTGASSING RATES REPORT SHEET
DATE:	
TIME:	
TESTI.D.: e.g. WBSC1_1	WBSC2-1
PSI TEST ENGINEER:	
QUALITY ASSURANCE:	

RGA NUMBER:	
RGA SENSOR HEAD SERIAL # QMS	V010
RGA ELECTRONICS UNIT SERIAL # QME	13

AMU	I (Amp)	Leak rate Torr-L/s	F_{amu} Sensitivity Factor wrt N2	I with leak (Amp)	Gas load sensitivity Torr-L/s-A	Q Torr-L/s	q Torr-L/s-cm^2
H2	2×10^{-7}	4.8×10^{-6}		$2.\times10^{-7}$			
12			0.42				
14			0.5				
15			0.54				
CH4	1.0×10^{-9}		0.57		742.	5.2×10^{-7}	9.8×10^{-13}
17			0.6				
H2O	1.0×10^{-8}		0.64		742.	5.9×10^{-6}	1.1×10^{-11}
19			0.67				
26			0.71				
28	2.7×10^{-9}	9.5×10^{-7}		4.0×10^{-9}	742.		
32			1.14				
38			1.36				
40	2.0×10^{-10}	9.4×10^{-6}		3.8×10^{-10}	522.		
43			1.53				
44			1.57				
129		2.5×10^{-8}					
131		2.0×10^{-8}					
132	3.7×10^{-12}	2.5×10^{-8}		3.0×10^{-11}	951.		
134		1.0×10^{-6}					
OTHER	1.44×10^{-9}				742.	1.068×10^{-6}	2.0×10^{-12}

TITLE	OUTGASSING RATES REPORT SHEET
DATE:	
TIME:	
TESTI.D.: e.g. WBSC1_1	WBSC 2-1
PSI TEST ENGINEER:	
QUALITY ASSURANCE:	

RGA NUMBER:	
RGA SENSOR HEAD SERIAL # QMS	
RGA ELECTRONICS UNIT SERIAL # QME	

AMU	I (Amp)	Leak rate Torr-L/s	F_{amu} Sensitivity Factor wrt N2	I with leak (Amp)	Gas load sensitivity Torr-L/s-A	Q Torr-L/s	q Torr-L/s-cm^2
	1.44×10^{-9}				742.	1.068×10^{-6}	2.0×10^{-12}

AGE: TEST I.D. FILENAME: XXXXXXXX.SAC

TITLE	RGA COMPUTER DATA FILE LOG
DATE:	
TIME:	
TESTI.D.: e.g. WBSC1_1	
PSI TEST ENGINEER:	
QUALITY ASSURANCE:	

RGA NUMBER:	
RGA SENSOR HEAD SERIAL # QMS	
RGA ELECTRONICS UNIT SERIAL # QME	

BARGRAPH DATA FILE NAME

ANALOG SCAN DATA FILE NAME

OTHER DATA FILES

PRINTOUT OF

1. LAST ANALOG SCAN BEFORE CALIBRATION
2. ANALOG SCAN WITH CALIBRATED LEAK OPEN
3. BARGRAPH PLOT

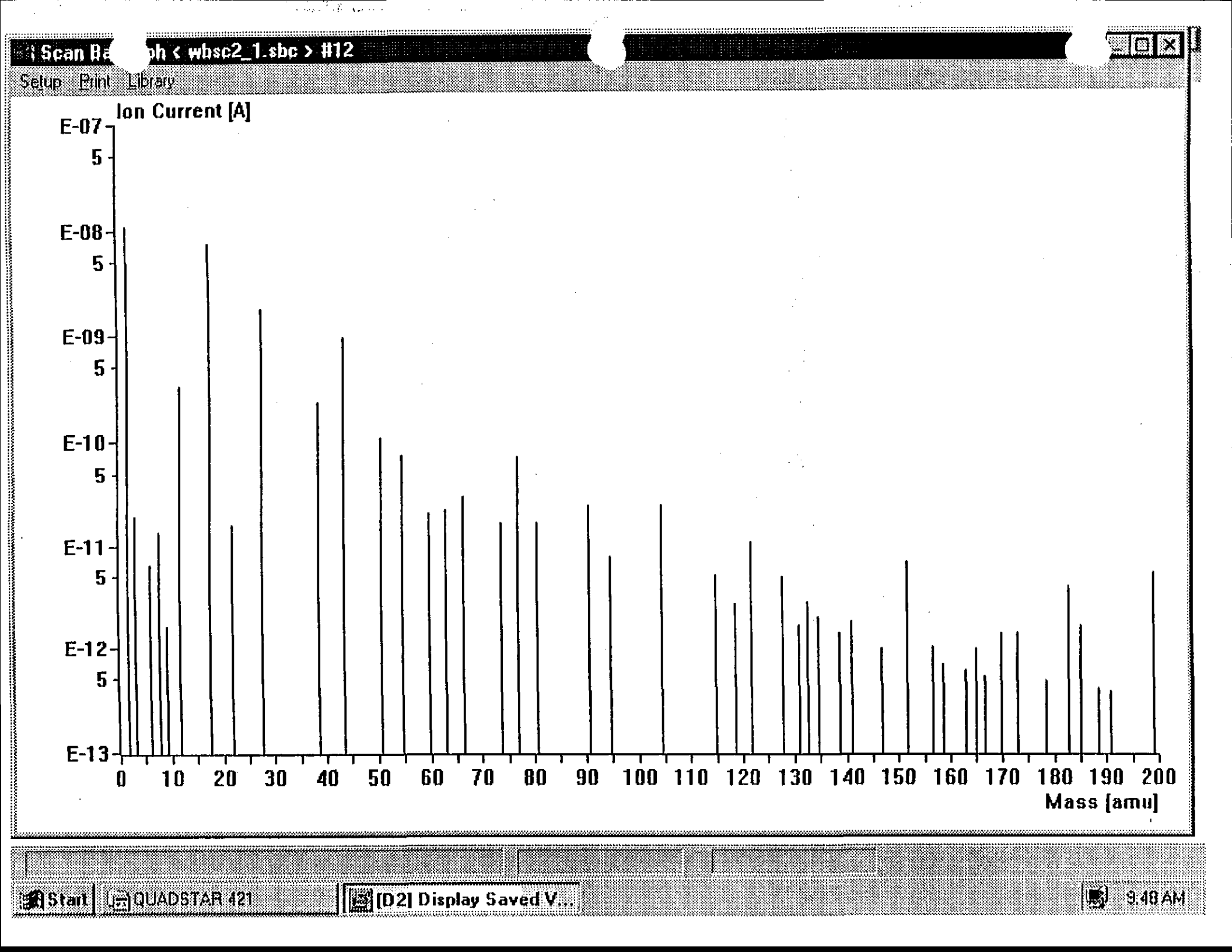
Scan Ba ph < wbsc2_1.sbc > #12
Setup Print Library
Ion Current [A]
E-07
5
E-08
5
E-09
5
E-10
5
E-11
5
E-12
5
E-13
0 10 20 30 40 50 60 70 80 90 100 110 120 130 140 150 160 170 180 190 200
Mass [amu]
Start
QUADSTAR 421
[D2] Display Saved V...
9:48 AM

SCAN GRAPH CYCLES : wbsc2_1.sbc

CYC: 5/21/97 2:43:10 PM:72 TIC: 1.20530 07[A]

m/e	Intensity[A]	m/e	Intensity[A]	m/e	Intensity[A]	m/e	Intensity[A]
2.00	1.027080E-07	4.22	1.779497E-11	5.97	3.875861E-12	7.50	1.094369E-11
9.41	2.248081E-12	11.84	5.903911E-10	17.78	1.066644E-08	19.75	3.384360E-10
21.75	2.977280E-11	27.75	2.717948E-09	38.75	5.434587E-10	43.69	1.926774E-09
50.31	2.094223E-10	54.69	1.886039E-10	59.66	4.575126E-11	66.72	8.133571E-11
76.72	1.508554E-10	80.75	3.828993E-11	88.50	1.173652E-11	90.84	6.429660E-11
96.38	1.804775E-11	104.84	5.421508E-11	106.59	1.963072E-11	114.75	1.252268E-11
121.84	2.414757E-11	128.09	7.462634E-12	132.63	3.744275E-12	139.06	2.399266E-12
141.16	3.571334E-12	146.69	1.916274E-12	151.84	9.368930E-12	157.06	1.847503E-12
159.09	1.100915E-12	163.03	1.348127E-12	165.22	1.842137E-12	171.00	2.033822E-12
172.94	1.794732E-12	179.34	9.317394E-13	182.91	4.872648E-12	185.09	1.994254E-12
189.28	6.272005E-13	191.25	7.675939E-13	197.06	5.723458E-13	197.53	5.272239E-13
199.16	7.197497E-12						

SCAN GRAPH CYCLES : wbsc2_1.sbc

CYC: 5/21/97 3:42:28 PM:52 TIC: 1.17767 07[A]

m/e	Intensity[A]	m/e	Intensity[A]	m/e	Intensity[A]	m/e	Intensity[A]
1.97	1.017102E-07	7.13	5.763395E-12	9.53	1.301394E-12	11.81	3.491153E-10
17.78	8.911298E-09	19.78	2.848810E-10	21.94	2.234622E-11	27.75	3.995030E-09
39.25	3.760567E-10	43.69	1.368983E-09	50.34	1.395492E-10	54.72	1.143892E-10
59.56	2.919189E-11	66.72	5.175676E-11	73.28	2.114019E-11	76.75	9.979696E-11
80.75	2.292649E-11	82.84	1.540672E-11	90.84	3.802663E-11	94.63	1.339798E-11
104.81	3.386904E-11	106.75	1.243088E-11	114.97	5.935257E-12	121.88	1.527139E-11
128.69	3.425105E-11	131.63	3.037727E-11	133.78	1.390242E-11	135.88	1.065580E-11
138.91	1.902200E-12	140.91	2.418868E-12	146.97	1.200325E-12	151.78	7.943594E-12
156.88	1.240870E-12	159.06	7.061833E-13	161.13	6.741841E-13	163.09	8.555292E-13
164.75	1.098004E-12	170.94	1.730049E-12	173.19	1.526635E-12	175.13	5.513169E-13
179.03	6.648577E-13	181.13	7.296873E-13	183.16	4.414825E-12	185.19	2.023912E-12
189.25	5.154226E-13	191.06	7.391427E-13	193.16	5.118181E-13	199.00	8.320481E-12

w/ calibrated leak

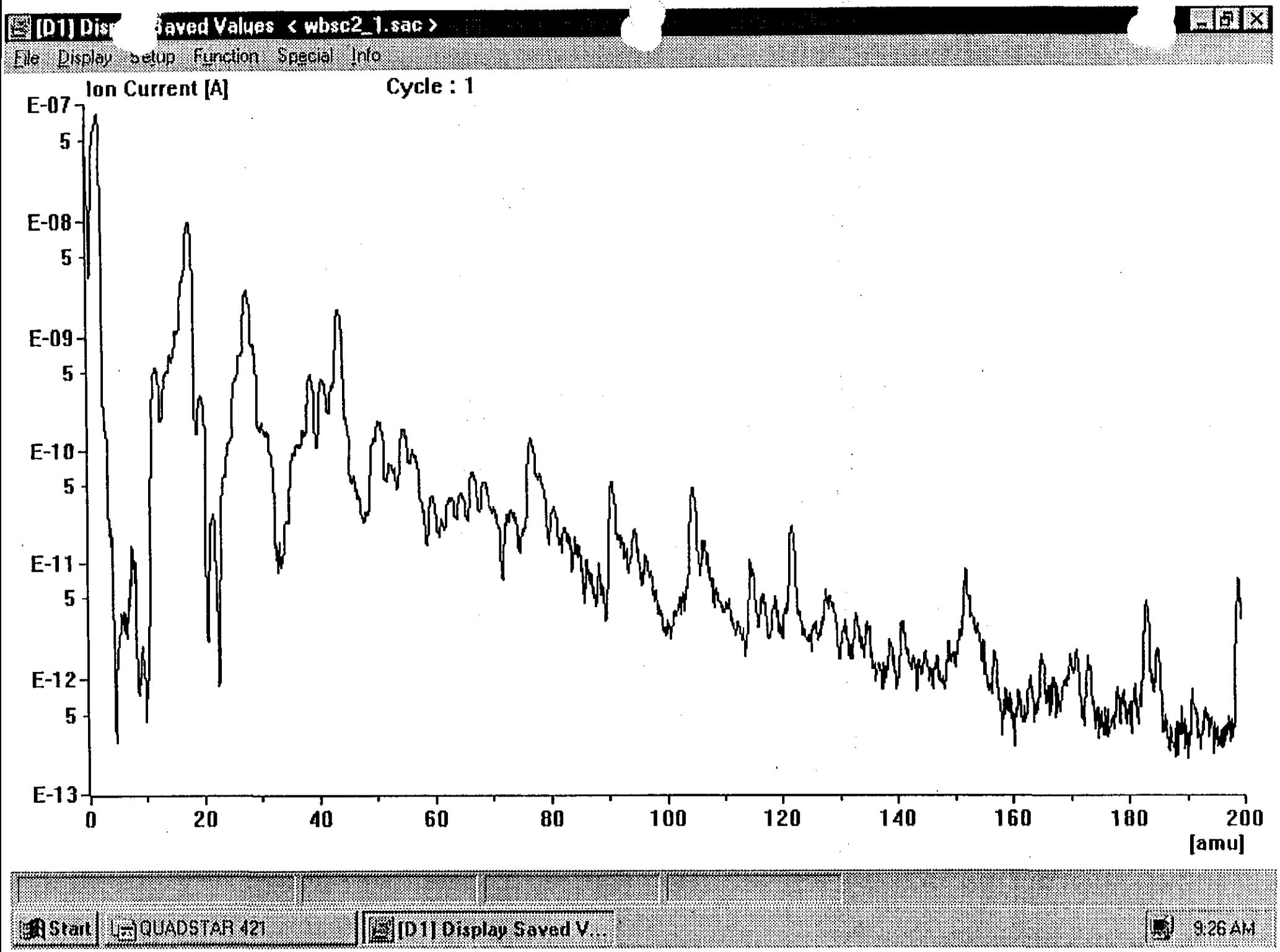
[D1] Disp
Saved Values < wbsc2_1.sac >
File Display Setup Function Special Info
Ion Current [A]
Cycle : 1
E-07
5
E-08
5
E-09
5
E-10
5
E-11
5
E-12
5
E-13
0
20
40
60
80
100
120
140
160
180
200
[amu]
Start
QUADSTAR 421
[D1] Display Saved V...
9:26 AM

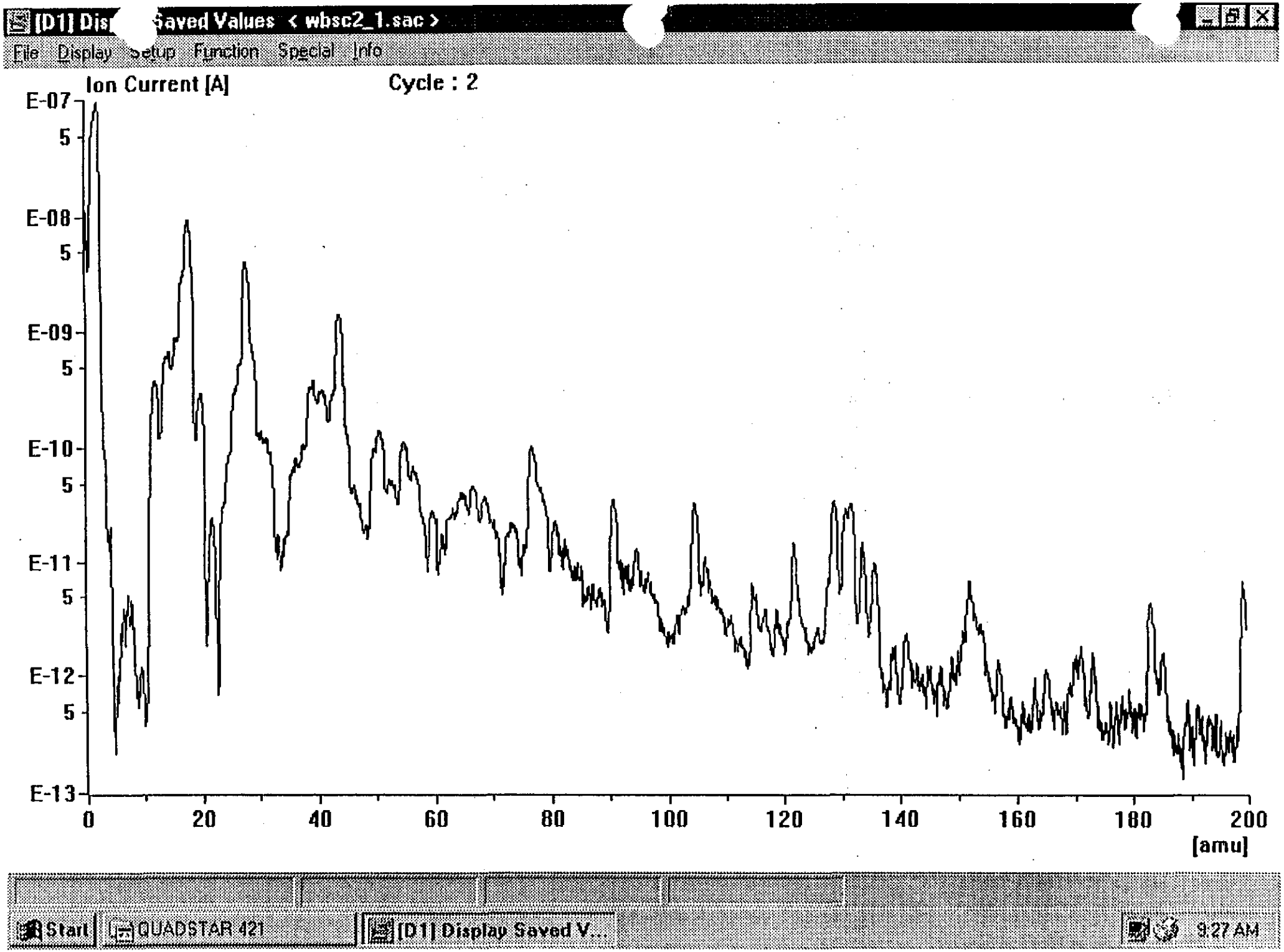
[D1] Dis
Saved Values < wbsc2_1.sac >
File Display Setup Function Special Info
Ion Current [A]
Cycle : 2
E-07
5
E-08
5
E-09
5
E-10
5
E-11
5
E-12
5
E-13
0
20
40
60
80
100
120
140
160
180
200
[amu]
Start
QUADSTAR 421
[D1] Display Saved V...
9:27 AM

[D1] Dis Saved Values < wbsc2_1.sbc >

File Mode Display Select Setup Function Special Info

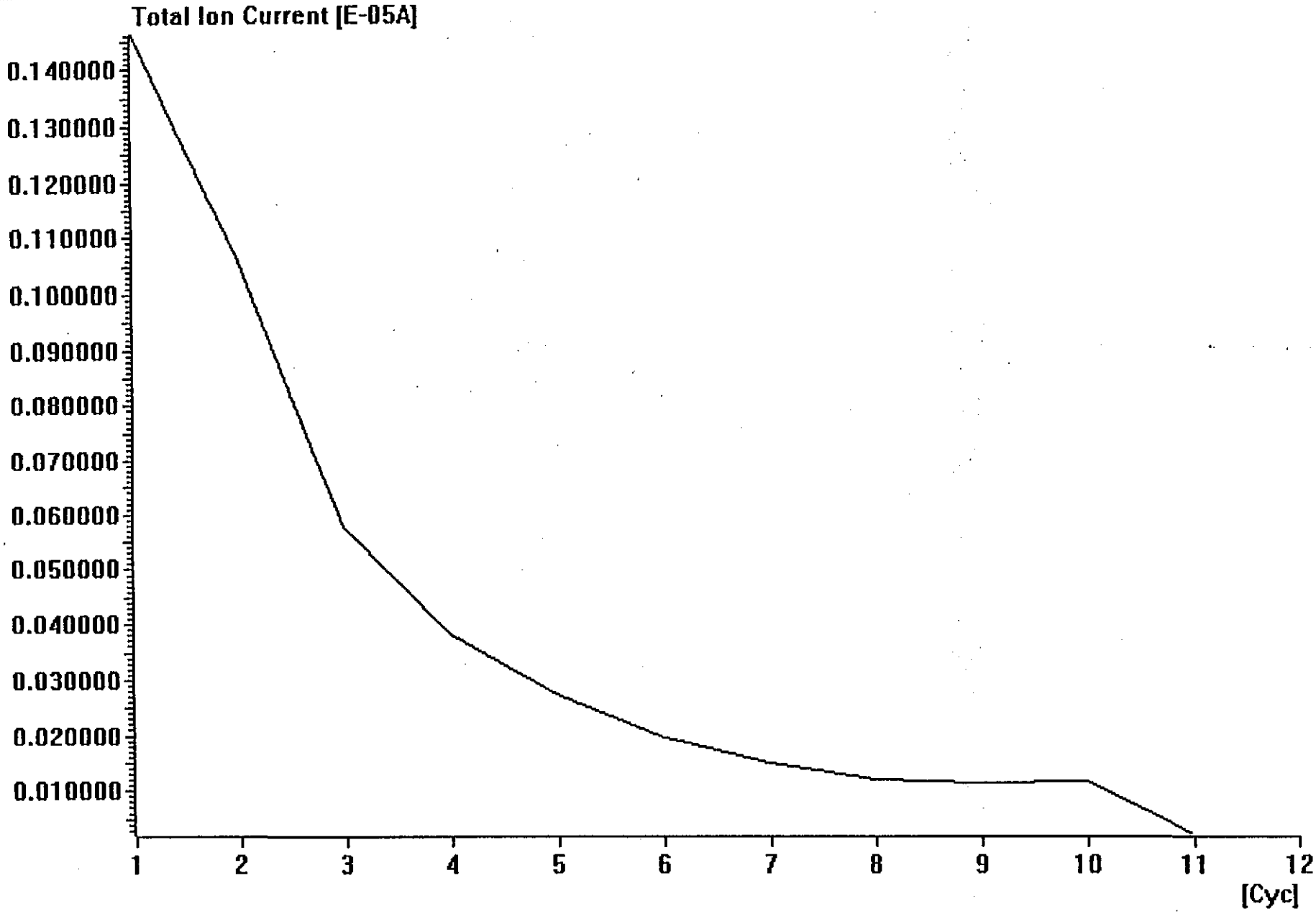

Start QUADSTAR 421 [D1] Display Saved V... 9:25 AM

RANOR, INC

NONCONFORMANCE REPORT

FORM QA 12.1 REV. 0 (07/08/96)

NCR NUMBER: NCR- 1012 | PAGE 1 OF 2 | SKETCH ATTACHED ☐

JOB NUMBER	CUSTOMER	PURCHASE ORDER NUMBER	QUANTITY
7300 Flm	PSI	555822-00	1

PART DESCRIPTION	DOCUMENT NUMBER AND REVISION	SERIAL NUMBER
BSC OVERALL ASS+ LIGO VAC	1049-4-101 REV-1	-02

CODE/SPECIFICATION: ☐ ASME SECTION III ☐ SAFETY RELATED ☐ ASME SECTION VIII ☐ MIL SPEC ☒ COMMERCIAL

DESCRIPTION OF NONCONFORMANCE

ITEM	REQUIREMENT	NONCONFORMANCE
1	48.44 ±0.045 ZONE B-8	48.370 48.392 -.025 -.003 OK
* 2	66.00 ±0.03 ZONE B-8 WHAT SIDE?	66.056 65.893 +.026 -.077 .009" U Li
3	⊥ | .075 | B | ZONE C-B	0.083 +.008 OK
4	// | .075 | C | ZONE C-B	0.126 +.051 OK
5	// | .030 | A | ZONE B-6	0.070 +.04 "B" ONLY
6	// | .030 | B | ZONE C-5	0.042 +.012

REMARKS: SEE INSP LOG FOR DIMENSION LOCATION IN REGARDS TO DEGREE. LENGTH DIMENSIONS OUT OF SPEC ARE DERIVED FROM A MIN/MAX CONDITION

ROUTING SHEET IDENTIFIED WITH NCR NO. AND DATE OF ISSUE: BY [signature] DATE: 2-7-97

JOE FOLDER

ORIGINATOR/INSPECTOR [signature] DATE 2-7-97

RESPONSIBILITY FOR NONCONFORMANCE

☐ VENDOR ☐ DESIGN ☐ MATERIAL ☐ CUTTING ☐ FORMING ☐ WELDING
☐ MACHINING ☒ INSPECTION ☐ CALIBRATION ☐ QC ☐ QA ☒ OTHER _____

TECHNICAL JUSTIFICATION/DESCRIPTION OF DISPOSITION

ITEM	TECHNICAL JUSTIFICATION	DESCRIPTION OF DISPOSITION
1-8	Submit to PSI for Tech. Justification	USE ASIS
	& Written Disposition. [signature]	

TECHNICAL JUSTIFICATION: BY [signature] DATE: 2-27-97

DISPOSITION: BY Rich Bailey/KS DATE: 2-27-97

DISPOSITION OF NONCONFORMANCE: ☐ ACCEPT AS IS ☐ USE AS IS ☐ REPAIR/REWORK ☐ REJECT
CONDITIONAL RELEASE: CR NO. _____

RECOMMENDED DISPOSITION: ☐ ACCEPTED ☐ NOT ACCEPTED

10CFR21 EVALUATION REQUIRED: ☐ YES ☐ NO
CORRECTIVE ACTION REQUIRED: ☐ YES ☐ NO
CUSTOMER APPROVAL REQUIRED: ☐ YES ☐ NO
APPROVED BY: DATE

APPROVAL OF DISPOSITION:
VP ENGINEERING DATE
QA MANAGER DATE
ANI DATE

VERIFICATION OF DISPOSITION:
ACCEPTED BY DATE
QA MANAGER DATE
ANI DATE

* 66.056 at 0°
65.898 at 180°

RADOR, INC

NONCONFORMANCE REPORT

FORM QA 12.1 REV. 6 (07/30/96)

NCR NUMBER	PAGE 2 OF 2
NCR- 1012	SKETCH ATTACHED:

DESCRIPTION OF NONCONFORMANCE

ITEM	REQUIREMENT	NONCONFORMANCE
7	⊥ | .030 | A | ZONE C-5	0.05 +0.020 OK
8	// | .030 | C | ZONE D-7	0.059 +0.029

TECHNICAL JUSTIFICATION/DESCRIPTION OF DISPOSITION

ITEM	TECHNICAL JUSTIFICATION	DESCRIPTION OF DISPOSITION

PROCESS SYSTEMS INTERNATIONAL, INC.
20 Walkup Drive, Westborough, MA 01581

LIGO PROJECT

CALIFORNIA INSTITUTE OF TECHNOLOGY
MASSACHUSETTS INSTITUTE OF TECHNOLOGY

Table of Contents

TAG # WBSC - 3
P/N – VO49-4-003 S/N-03

1	C of C to applicable Codes and Standards Material test reports for shells, heads and large flanges. C of C for nozzles, small, parts and flanges.	
2	Vendor Quality Plan doc. Package.	
3	Heat-Treat Charts (by Ranor) when applicable.	
4	Final Cleaning Certificate.	
5	Bakeout Certificate. Final Vacuum Test Report. Acceptance Test Data	
6	Non Conformance Reports. Use As Is ,when applicable	
7	As Built Drawings/Dimensions.	

PROCESS SYSTEMS INTERNATIONAL, INC.
20 Walkup Drive, Westborough, MA 01581

CALIFORNIA INSTITUTE OF TECHNOLOGY ~ LIGO PROJECT
MASSACHUSETTS INSTITUTE OF TECHNOLOGY

CERTIFICATE OF CONFORMANCE

CUSTOMER:	The LIGO Project California Institute of Technology Mail Stop 18-34 Pasadena, CA 91125
DATE:	11/7/97
CONTRACT ORDER NUMBER:	PC 175730
PSI JOB NUMBER:	V59049
DRAWING NUMBER(S):	V049 4 003
TAG NUMBER:	WBSC 03
SERIAL NUMBER:	03
ITEM:	Refer to attached Material Tracer Record

APPLICABLE SPECIFICATION(S):	SA-240	A-500
	SA-193 B7	
	SA-194 2H	
	F-436	

PSI certifies that the items furnished in this shipment have been manufactured from the materials and in accordance with the process test and acceptance criteria requirements specified within the drawing(s) and/or specification(s) listed above. All inspection records and test results are on file with PSI and are available for examination.

Gene Senecal 11-7-97
Gene Senecal
Quality Assurance Engineer

F:\HV\LIGO\CORRESPO\SENECAL:COC-FORM

Material Tracer Record

Part Number WBSC 03 S/N 03

Item #	Qty	U/M	Part code	Description	C of C MIC # CMTR
1	1	EA	V049M001 1	HEAD SST304L SA240 CMTR ASME FLGD & DISHED 104.5 ID .344 MIN THK (3/8 NOM. THK) 105 DISH RAD 6-1/2 INSIDE CORNER RAD WITH 2 S.F. APPROX OVERALL HEIGHT 20.08 COLD FORMED-DIP PICKLED	A 542
3	1	EA	V049P7801 14	PLATE SST GR304/304L SA240 CMTR 1/2 X91-1/2 X333 PER SPEC V0492041	A 536
4	1	EA	V049P7802 14	PLATE SST GR304/304L SA240 CMTR 1/4 X60 X332 LG PER SPEC V0492041	A 536
5	1	EA	V049M003 1	FLANGE SST F304L SA182 CMTR FORGED BLANK ASME CODE 1992 EDITION THRU 1994 ADDENDA MACHINED TO 1-1/2 +.06 THK 112-1/2 +.06 ODX104.25 -.06 ID FINISH 250/500 PER SPEC V0492040	A 937
6	1	EA	V049M004 1	FLANGE SST F304L SA182 CMTR FORGED BLANK ASME CODE 1992 EDITION THRU 1994 ADDENDA MACHINE TO 1-1/4 +.06 THK 112-1/2 +.06 ODX104.25 -.06 ID FINISH 250/500 PER SPEC V0492040	A 920
7	4	EA	V049M135 1	FLANGE SST F304L SA182 CMTR FORGED BLANK ASME CODE 1992 EDITION THRU 1994 ADDENDA MACHINE TO 1-5/8 +.06 THK 68-1/2+.06 OD X 60.0 -.06 ID FINISH 250/500 PER SPEC V0492040	A 772 A 755 A 751 A 759
9	8	EA	V049M309 3	FLANGE SST304L COFC HALF NIPPLE CONFLAT NON ROT. 16-1/2 ODX14 OD TUBEX.120WT 5 OVERALL HEIGHT .390 DIA THRU 36 HOLES EQ.SP. ON A 15.310 DIA B.C.	C of C

Material Tracer Record

Part Number WBSC 03 S/N 03

10	6	EA	V049M311 3	FLANGE SST304L COFC HALF NIPPLE CONFLAT NON ROT. 12 OD X 10 OD TUBEX.120WT 5 OVERALL HEIGHT .332 DIA THRU 32 HOLES EQ. SP. ON A 11.181 DIA B.C.	C of C
11	12	EA	V049M320 1	FLANGE SST304L CMTR HALF NIPPLE CONFLAT NON ROT. 10 ODX8 OD TUBE X .250 WT 5 OVER ALL HEIGHT .332 DIA THRU 24 HOLES EQ.SP. ON A 9.128 DIA B.C.	C of C
12	1	EA	V049P7803 14	PLATE SST GR304/304L SA240 CMTR 1/2 X72 X195 LG PER SPEC V0492041	A 486
13	4	EA	V049M324 3	FLANGE SST304L COFC HALF NIPPLE CONFLAT NON ROT. 16-1/2 ODX14 ODTUBEX.120WT 16-1/2 OVERALL HEIGHT .390 DIA THRU 36 HOLES EQ. SP. ON A 15.310 DIA B.C.	C of C
14	1	EA	V049M010 1	HEAD SST304L SA240 CMTR ASME FLGD & DISHED 104.5 ID .344 MIN THK (3/8 NOM. THK) 105 DISH RAD 6-1/2 INSIDE CORNER RAD WITH 2 S.F. APPROX OVERALL HEIGHT 20.08 COLD FORMED-DIP PICKLED	A 546
15	30	FT	V0494001P17 1	BAR SST304 SA276 CMTR FL CMTR .375X4	C of C
16	2	EA	V049M880 1	PLATE SST304 SA240 CMTR .75 THK X 36 X 20	C of C
17	30	FT	V0494001P18	ANGLES (L) SST 304 CMTR .250X4	C of C
18	1	EA	V0494001P19 1	PLATE SST304L SA240 CMTR ½ THK X 20-1/2 DIA (MAKE FROM 60 PORT CUT OUT SLUG V049P7801 14)	C of C
19	2	EA	V0494001P21 14	PLATE SST304L SA240 CMTR ½ THK NOTE: (QTY 2 -USE DROP FROM P/N V049P7801 14) CMTR REQUIRED	C of C
20	4	EA	V0494001P15 14	PLATE SST304L SA240 CMTR ½ THK NOTE:(QTY 4 - USE DROP FROM P/N V049P7801 14)	C of C

Material Tracer Record

Part Number WBSC 03 S/N 03

21	25	FT	C387706-1D 1	BAR SA479 304L CMTR FL .375X1.5	C of C
22	2	FT	V0494003P22 1	BAR SST 304/304L SA240 CMTR CMTR FL 1/4 X 2.5	C of C
47	55	EA	202678 3	BOLT STL SA193 B7 COFC HEX HD 7/8-9 UNC X 4 LG ZINC PLATED .0002 MIN THK.CLEAR CHROMATE	C of C
48	55	EA	202679 3	NUT STL SA194 2H COFC HEX HD 7/8-9 UNC ZINC PLATED .0002 MIN THK CLEAR CHROMATE PROCESS	C of C
49	115	EA	202581 3	WASHER STL ASTM F436 COFC 1-3/4 ODX15/16 IDX1/4 THK ELECTROLESS NICKEL PLATED	C of C
50	2	EA	V0494001P50 14	PLATE SST304L SA240 CMTR 1/2 THK (NOTE QTY 2 - USE DROP FROM P/N V049P7801 14) CMTR REQUIRED	C of C
51	28	EA	V049M126 1	BAR SST304 SA479 CMTR FL .50 X2.0	C of C
52	4	FT	V049M127 1	BAR SST304 SA479 CMTR FL CMTR .375 X2.0	C of C
55	4	SF	V049M130 14	PLATE SST304 SA240 CMTR 1/2 THK CUT FROM DROP NOTE: (QTY 4 SF - USE DROP FROM P/N V049P7803 14)	C of C
63	1	EA	V0494003P63 14	PLATE SST304 SA240 CMTR 1/2 THK CUT FROM DROP V049P7801 14	C of C
64	4	EA	V049M501 3	ELBOW SST304L 90DEG 1 ODX.065 WT BTWLD COFC	C of C
65	4	EA	V049M601 3	REDUCER SST304L COFC CONC BTWLD 1 ODX ¾ ODX.065 WT	C of C
66	2	EA	V049M601 3	REDUCER SST304L COFC CONC BTWLD 1 ODX 3/4 ODX.065 WT	C of C
67	2	EA	V049M605 3	ELBOW SST304L COFC 45 DEG BTWLD 3/4 OD X .035WT	C of C
68	6	EA	V049M508 3	ELBOW SST304L COFC 90 DEG BW 3/4 OD X .065 WT	C of C

Material Tracer Record

Part Number WBSC 03 S/N 03

1	1	EA	V049M002 1	HEAD SST304L SA240 CMTR ASME FLGD & DISHED 60.5 ID .22 MIN. THK. (1/4 NOM. THK) 60-1/2 DISH RAD 3-3/4 INSIDE CORNER RADIUS WITH 2 S.F. APPROX OVERALL HEIGHT 12.56 COLD FORMED-DIP PICKLED	A 791 A 361
2	1	EA	V049M243 1	FLANGE SST F304L SA182 CMTR FORGED BLANK ASME CODE 1992 EDITION THRU 1994 ADDENDA MACHINE TO 1-1/4 +.06 THK 68.50 +.06 OD X 60.00 -.06 ID FINISH 250/500 PER SPEC V0492040	A 576 A 558
3	5	EA	V049M220 1	FLANGE SST304L CMTR HALF NIPPLE CONFLAT NON ROT. 10 OD X 8 OD TUBE X 1/4 WT 3-1/8 OVER ALL HEIGHT .332 DIA 24 HOLES EQ. SP. ON A 9.128 DIA. B.C.	C of C
4	4	FT	C387904-F 3	BAR SA479 TP304 CofC FL .250X0.75	C of C
2	1	EA	V0494025	BSC ANNULUS PIPING	C of C
4	1	EA	V0494204	BSC AIR FILTER ASSY	C of C
5	1	EA	202667 3	FLANGE SST304L COFC CONFLAT BLANK 10 OD NON ROT. .332 DIA THRU 24 HOLES EQ. SP. ON A 9.128 DIA B.C.	C of C
6	1	EA	202671 3	GASKET COP OFHC COFC CONFLAT 10 OD FLANGE	C of C
7	24	EA	V049M777	BOLT SST 18-8 HEX HD 5/16 -18 X2-1/2 LG.	C of C
8	24	EA	V049M782	NUT SILICON BRZ HEX 5/16 -18	C of C
9	48	EA	V049M785	WASHER SST 18-8 FLAT 5/16	C of C
5	2	EA	V0494142P2 3	FLANGE SST304L COFC CONFLAT REDUCING PER DETAIL B DWG V049-4-142 WITH 4 1/2X 2 1/2 CONFLAT BORE AND TAPPED HOLES WITH 4 1/2X2 1/2 CONFLAT BLANK GASKET AND HARDWARE	C of C

Material Tracer Record

Part Number WBSC 03 S/N 03

9	515	EA	V049M777	BOLT SST 18-8 HEX HD 5/16 -18 X21/2	C of C
10	515	EA	V049M782	NUT SILICON BRZ HEX 5/16 -18	C of C
11	###	EA	V049M785	WASHER SST 18-8 FLAT 5/16	C of C
12	1	EA	V049M307 3	FLANGE SST304L COFC CONFLAT NON-ROTATABLE 2-3/4 OD BLANK	C of C
13	1	EA	V049M751 3	GASKET OFHC COP COFC 2-3/4 OD CONFLAT PER SPEC V049-2-037/T4	C of C
14	6	EA	V049M775	BOLT SST 18-8 HEX HD 1/4-20 X 1-1/2	C of C
15	6	EA	V049M781	NUT SILICON BRZ HEX 1/4-20	C of C
16	12	EA	V049M784	WASHER SST 18-8 FLAT 1/4	C of C
31	10	EA	202666 3	FLANGE SST304L COFC CONFLAT BLANK 16-1/2 OD NON ROT. .390 DIA THRU 36 HOLES EQ. SP. ON A 15.310 DIA B.C.	C of C
32	6	EA	202549 3	FLANGE SST304L COFC CONFLAT 12 OD BLANK NON ROT. .332 DIA THRU HOLES 32 PLACES EQ. SP. ON A 11.181 DIA. B.C.	C of C
33	21	EA	202667 3	FLANGE SST304L COFC CONFLAT BLANK 10 OD NON ROT. .332 DIA THRU 24 HOLES EQ. SP. ON A 9.128 DIA B.C.	C of C
37	11	EA	202670 3	GASKET COP OFHC COFC CONFLAT 16-1/2 OD FLANGE	C of C
38	6	EA	202552 3	GASKET COP OFHC COFC CONFLAT 12 OD FLANGE	C of C
39	21	EA	202671 3	GASKET COP OFHC COFC CONFLAT 10 OD FLANGE	C of C
40	440	EA	V049M780	BOLT SST 18-8 HEX HD 3/8 -16 X3 LG	C of C
43	1	EA	V049M016	O'RING VITON A500 BAKED .275 NOM X 337-1/2 LG VULCANIZED	C of C
44	1	EA	V049M017	O'RING VITON A500 BAKED .275 NOM X 328-1/8 LG VULCANIZED	C of C
45	4	EA	V049M023	O'RING VITON A500 BAKED .275 NOM X 191-1/4 LG VULCANIZED	C of C

Material Tracer Record

Part Number WBSC 03 S/N 03

46	4	EA	V049M022	O'RING VITON A500 BAKED .275 NOM X 200-5/8 LG VULCANIZED	C of C
47	120	EA	202678 3	BOLT STL SA193 B7 COFC HEX HD 7/8-9 UNC X 4 LG ZINC PLATED .0002 MIN THK.CLEAR CHROMATE	C of C
48	120	EA	202679 3	NUT STL SA194 2H COFC HEX HD 7/8-9 UNC ZINC PLATED .0002 MIN THK CLEAR CHROMATE	C of C
49	240	EA	202581 3	WASHER STL ASTM F436 COFC 1-3/4 ODX15/16 IDX1/4 THK ELECTROLESS NICKEL PLATED	C of C
50	440	EA	V049M783	NUT SILICON BRZ HEX 3/8 -16	C of C
51	880	EA	V049M786	WASHER SST 18-8 FLAT 3/8	C of C
4	1	EA	V0494142P1 3	FLANGE SST304L COFC CONFLAT REDUCING PER DETAIL A DWG V049-4-142 WITH 4 1/2X 2 1/2 CONFLAT NIPPLE BLANK GASKET AND HARDWARE WITH 2 3/4 X 1 1/2 CONFLAT NIPPLE BLANK GASKET AND HARDWARE	C of C
5	1	EA	V0494142P2 3	FLANGE SST304L COFC CONFLAT REDUCING PER DETAIL B DWG V049-4-142 WITH 4 1/2X 2 1/2 CONFLAT BORE AND TAPPED HOLES WITH 4 1/2X2 1/2 CONFLAT BLANK GASKET AND HARDWARE	C of C
9	560	EA	V049M777	BOLT SST18-8 HEX HD 5/16 -18 X2-1/2	C of C
10	560	EA	V049M782	NUT SILICON BRZ HEX 5/16 -18	C of C
11	###	EA	V049M785	WASHER SST 18-8 FLAT 5/16	C of C
12	1	EA	V049M307 3	FLANGE SST304L COFC CONFLAT NON-ROTATABLE 2-3/4 OD BLANK	C of C
13	1	EA	V049M751 3	GASKET OFHC COP COFC 2-3/4 OD CONFLAT PER SPEC V049-2-037/T4	C of C

Material Tracer Record

Part Number WBSC 03 S/N 03

14	6	EA	V049M775	BOLT SST18-8 HEX HD 1/4-20 X 1-1/2	C of C
15	6	EA	V049M781	NUT SILICON BRZ HEX 1/4-20	C of C
16	12	EA	V049M784	WASHER SST 18-8 FLAT 1/4	C of C
31	10	EA	202666 3	FLANGE SST304L COFC CONFLAT BLANK 16-1/2 OD NON ROT. .390 DIA THRU 36 HOLES EQ. SP. ON A 15.310 DIA B.C.	C of C
32	6	EA	202549 3	FLANGE SST304L COFC CONFLAT 12 OD BLANK NON ROT. .332 DIA THRU HOLES 32 PLACES EQ. SP. ON A 11.181 DIA. B.C.	C of C
33	16	EA	202667 3	FLANGE SST304L COFC CONFLAT BLANK 10 OD NON ROT. .332 DIA THRU 24 HOLES EQ. SP. ON A 9.128 DIA B.C.	C of C
37	12	EA	202670 3	GASKET COP OFHC COFC CONFLAT 16-1/2 OD FLANGE MATERIAL	C of C
38	6	EA	202552 3	GASKET COP OFHC COFC CONFLAT 12 OD FLANGE	C of C
39	16	EA	202671 3	GASKET COP OFHC COFC CONFLAT 10 OD FLANGE	C of C
40	440	EA	V049M780	BOLT SST 18-8 HEX HD 3/8 -16 X3 LG	C of C
43	1	EA	V049M016	O'RING VITON A500 BAKED .275 NOM X 337-1/2 LG VULCANIZED	C of C
44	1	EA	V049M017	O'RING VITON A500 BAKED .275 NOM X 328-1/8 LG VULCANIZED	C of C
45	4	EA	V049M023	O'RING VITON A500 BAKED .275 NOM X 191-1/4 LG VULCANIZED PER SPEC V049-2-045	C of C
46	4	EA	V049M022	O'RING VITON A500 BAKED .275 NOM X 200-5/8 LG VULCANIZED PER SPEC V049-2-045	C of C
47	120	EA	202678 3	BOLT STL SA193 B7 COFC HEX HD 7/8-9 UNC X 4 LG ZINC PLATED .0002 MIN THK.CLEAR CHROMATE	C of C
48	120	EA	202679 3	NUT STL SA194 2H COFC HEX HD 7/8-9 UNC ZINC PLATED .0002 MIN THK CLEAR CHROMATE PROCESS	C of C

Material Tracer Record

Part Number WBSC 03 S/N 03

49	240	EA	202581 3	WASHER STL ASTM F436 COFC 1-3/4 ODX15/16 IDX1/4 THK ELECTROLESS NICKEL PLATED CERTIFICATE OF COMPLIANCE REQUIRED	C of C
50	440	EA	V049M783	NUT SILICON BRZ HEX 3/8 -16	C of C
51	880	EA	V049M786	WASHER SST 18-8 FLAT 3/8	C of C
4	1	EA	V0494204	BSC AIR FILTER ASSY	C of C
5	1	EA	202667 3	FLANGE SST304L COFC CONFLAT BLANK 10 OD NON ROT. .332 DIA THRU 24 HOLES EQ. SP. ON A 9.128 DIA B.C.	C of C
6	1	EA	202671 3	GASKET COP OFHC COFC CONFLAT 10 OD FLANGE	C of C
7	24	EA	V049M777	BOLT SST 18-8 HEX HD 5/16 -18 X2-1/2 LG.	C of C
8	24	EA	V049M782	NUT SILICON BRZ HEX 5/16 -18	C of C
9	48	EA	V049M785	WASHER SST 18-8 FLAT 5/16	C of C

Tel: 717-248-4911

STANDARD STEEL

A Division of FREEDOM FORGE Corporation

FOR: PROCESS SYS INT MA

CUSTOMER ORDER NUMBER 555492

REPORT DATE: 09/06/96

PCS SHIPPED: 9

02 OUR ORDER NO 432620502

SHIPLIST NO: 56599

PSI MIC NO. **A558**

PRODUCT

RING V049M243-1
MACHINE 250/500 MICRO TO SIZES SHOWN: 68.50" OD +.06 X 60.0" ID .06 X 1.250" WD +.06
SPECIFICATION: ASME SA182 GRADE F304L IN ACCORDANCE WITH PROCESS SYSTEMS SPEC.
AV049-2-040 REV 6

CUSTOMER

PROCESS SYSTEMS INTERNATIONAL, INC.

20 WALKUP DRIVE

WESTBOROUGH MA 01581
ATTENTION:

PROCESS SYSTEMS INT'L., INC.
Reviewed this report and it compiles with SA/SB-182 Gr. 304L
95 Edition, — Addenda
By C. Wotecki Date 9-11-96

CHEMICAL ANALYSIS

AT NO.	C	SI	P	MN	S	NI	CR	MO	V	AL	TI				
309280	✓ .031	✓ .45	✓ .032	✓ 1.72	✓ .001	✓ 11.48	✓ 18.55					N .0500			

MECHANICAL PROPERTIES

HEAT NUMBER	SERIAL NUMBER	BRINELL	TEN TEMP (F)	TEN BHN	TENSILE LOCATION	UTS (KSI)	YIELD ST (KSI) .20%OFST	% ELONG	%RED AREA	IMPACT DATA LOCATION	TEMP (F)	FT. LBS	% SHR	LAT EXP	GRN SZE
309280	6G2745D		+75		PROLONG	74.5 ✓	36.5 ✓	64.0 ✓	79.0						
309280	6G2743A														
309280	6G2743D														
309280	6G2743C														
309280	6G2743D														
309280	6G2743E														
309280	6G2746A														
309280	6G2746B														
309280	6G2746C														

3

PSI MIC NO. A361

Allegheny Ludlum CORPORATION

Jessop Specialty Products
500 Green Street
Washington, PA 15301

CERTIFIED MATERIAL TEST REPORT

OUR ORDER NO.	LP6346050
YOUR ORDER NO.	73160-99-S-90-06
MEMO NO.	113518 DUAL CERT
DATE	04/19/96
SALESMAN NO.	416

H. M. O'Connor
AUTHORIZED SIGNATURE

Ship WILLIAMS & CO
To 2105 LARRICK RD
CAMBRIDGE OH 43725

WILLIAMS & COMPANY INC
THE ARBORETUM
760 CONSTITUTION DR
EXTON PA 19341

JESSOP T 304L STAINLESS HRAP
ASTM A240-91a ASME SA-240-A93 ASTM A167-91
CHEM & MECH PROP. TO ASTM A276-91a CHEM ONLY ASTM A312-91b

A341

Heat	Slip	Lot No	Size	Pcs	Weight
70890	15067 A	6667	.2500 x 96.0000 x 353.0000	1	2627
71153	15068 A	6746	.2500 x 96.0000 x 360.0000	1	2679
71153	15068 B	6746	.2500 x 96.0000 x 360.0000	1	2679

Heat	C	MN	P	S	SI	NI	CR	MO	CO	CU	N
70890	.025	1.74	.028	.0029	.22	8.16	18.56	.27	.16	.23	.084
71153	.017	1.82	.026	.0007	.34	8.70	18.39	.26	.08	.29	.094

Lot No	Gauge	Yield Strength	Tensile Strength	Elong	Red. of Area	Hardness	Bend	Corrosion	Grain Size
6667	.2500	39.0 KSI	84.8 KSI	62.0	70.2	B76	OK	OK	
6746	.2500	40.3 KSI	84.4 KSI	57.8	70.7	B82	OK	OK	

MATERIAL WAS NOT WELDED
MATERIAL WAS PRODUCED WITHOUT KNOWN CONTACT WITH MERCURY OR LOW MELTING POINT CONTAMINANTS

PROCESS SYSTEMS INT'L., INC.
Reviewed this report and it complies with (SA)SB- 240 Gr. 304L
95 Edition, 95 Addenda
By C. Woroniecki Date 7-22-96

WMS. & CO.
Q.A. APPROVED
APR 23 '96
KD

EXCEPT AS OTHERWISE NOTED, THIS MATERIAL HAS BEEN MANUFACTURED AND TESTED IN ACCORDANCE WITH THE LISTED SPECIFICATIONS AND RESULTS CONFORM TO THE SPECIFICATION AND ORDER REQUIREMENTS.

WASHINGTON STEEL
A LUKENS COMPANY

TEST CERTIFICATE 2 20114

CUSTOMER P.O.: 731649950306
DESCRIPTION: 1 - RECTANGLE .375 -X- 120 -X- 360

PAGE NO. 01 02
FILE NO: 8697-03-16
DATE: 05/03/96
MILL ORDER NO: 16558-001

SOLD TO:
WILLIAMS & CO. INCORPORATED
201 PENNSYLVANIA AVENUE
PITTSBURGH PA 15233

SEND TO: 01
TEST REPORT WITH SHIPMENT

SHIP TO:
WILLIAMS & CO. INC.
7840 REINHOLD DRIVE
CINCINNATI OH 45237

PSI MIC NO. A546

THIS MATERIAL HAS BEEN MANUFACTURED AND TESTED IN ACCORDANCE WITH PURCHASE ORDER REQUIREMENTS AND SPECIFICATIONS:

ILLI A240 YR 93 TYPE-304L
STM A240-94A TYPE 304/304L, ASME SA240
RACTICE A & E, ASTM A480-94B, ASTM A276-94B

ASTM A240 TYPE 304L
95 EDITION TYPE 304/304L, ASTM A262-93A
(CHEM & MECH PROPERTIES ONLY) TYPE 304/304L

MELT/SLAB

0985 /2C
Y0985
ROD ANALYSIS

CHEMICAL ANALYSIS

	C	MN	P	S	CU	SI	NI	CR	MO	V	TI	B	N
	✓	✓	✓	✓	✓	✓	✓	✓	✓				✓
Y0985	.016	1.51	.027	.006	.28	.49	9.05	18.20	.28				.0780
ROD ANALYSIS	.018	1.52	.027	.006	.28	.50	8.99	18.28	.29				.0810

PRACTICES

WMS. & CO.
Q.A APPROVED
MAY 08 '96
SM

TENSILES

PE	YLD (PSI X 100)	TENS X 100	% ELONG 2"	% R.A.
XI	406 ✓	826 ✓	72.0 ✓	54.0 ✓

CHARPY V IMPACTS

TYPE	TEMP	MILS LATERAL EXPANSION	% SHEAR

OTHER TESTS PERFORMED

BRINELL 156 TEST LOC-B
CORROSION A262E SATISFACTORY

PROCESS SYSTEMS INT'L., INC.
Reviewed this report and it complies with (SA)/SB 240 Gr. 304L
95 Edition, — Addenda
By C. Wozniak Date 9-9-96

INFORMATION

EIGHT PER PIECE = 4949 LBS. = 2250 KG.
O WELD REPAIR WAS PERFORMED BY LUKENS.
ERCURY OR MERCURY COMPOUNDS ARE NOT USED IN THE
ANUFACTURE OF LUKENS'/WASHINGTON'S PRODUCTS.
CORROSION TEST PER ASTM A262 PRACTICE A & E.
* SIZE = .3750"NOM X 120.0000"NOM X 380.0000"ACT X WGT. = 4909

HEAT TREAT CYCLES - MATL. OR TESTS - DEG FAHR.

MATL	TEST	NOM TEMP	MIN TEMP	MAX TEMP	HOLD MINS.	COOL METHOD	END TEMP
X	X	1950			0012	WQ	

HEAT TREAT CYCLES - TESTS ONLY - DEG FAHR.

START END TEMP	NOM TEMP	MIN TEMP	MAX TEMP	HOLD MINS.	HEAT RATE MAX	COOL RATE MAX

WE HEREBY CERTIFY THE ABOVE INFORMATION IS CORRECT:

Quality Assurance Laboratory
Coalesville, PA 19320

ELINORE ZAPLITNY
SUPERVISOR - TEST REPORTING

FORM NO. 2221TW (10/93)

PSI MIC NO. A536

Avesta Sheffield

Avesta Sheffield Plate Inc.

IT-2

Certificate of Analysis and Tests

OUR ORDER 84645 - 11 HEAT & PIECE 39361-2B 8/30/96

SOLD TO: PROCESS SYSTEMS INTERNATIONAL
20 WALKUP DRIVE
WESTBOROUGH MA 01581

SHIP TO: PROCESS SYSTEMS INTERNATIONAL
20 WALKUP DRIVE
WESTBORO MA 01581
737001-01

---------- YOUR ORDER & DATE ----------

555-477 6/17/96

---------- ITEM DESCRIPTION ----------

HEAT & PIECE 39361 - 2B
WEIGHT 1549
FINISH 1
GRADE 304L / 304 UNS-S30403 / UNS-S30400
DIMENSIONS .250 X 60.125 X 332.312 EXACT

---------- SPECIFICATIONS ----------

V049-2-041 REV0 WITH EXCEPTS
ASTM A480-94B, ASME SA480-95
COUPONS REQUIRED
ASTM A262-93 PRAC A

ASTM A240-95B, ASME SA240-95
NO GRIP MARKS-NO WELD REPAIR
ASTM A262-93 PRAC E

PLATES & TEST PCS SOLUTION ANNEALED @ 1950 DEGREES FARENHEIT MINIMUM.
THEN WATER COOLED OR RAPIDLY COOLED BY AIR
FREE OF MERCURY CONTAMINATION
HOT ROLLED, ANNEALED & PICKLED (HRAP)

---------- MECHANICAL & OTHER TESTS ----------

HARDNESS RB	84
YIELD STRENGTH (PSI)	43373 ✓
TENSILE STRENGTH (PSI)	84880 ✓
BEND	OK
INTERGRANULAR CORROSION	OK
ELONGATION % IN 2"	53.9 ✓
REDUCTION OF AREA %	72.4

---------- CHEMICAL COMPOSITION ----------

CARBON	(C)	.015 ✓
MANGANESE	(MN)	1.58 ✓
PHOSPHORUS	(P)	.027 ✓
SULFUR	(S)	.001 ✓
SILICON	(SI)	.42 ✓
CHROMIUM	(CR)	18.23 ✓
NICKEL	(NI)	8.64 ✓
COBALT	(CO)	.11
COPPER	(CU)	.48
MOLY	(MO)	.41
NITROGEN	(N)	.07 ✓

PROCESS SYSTEMS INT'L., INC.
Reviewed this report and it complies
with SA/SB- 240 Gr 304/304L
05 Edition, ____ Addenda
By C. Wotcicki Date 9-5-96

KNOWINGLY & WILLFULLY FALSIFYING OR CONCEALING A MATERIAL FACT ON THIS FORM, OR MAKING FALSE, FICTITIOUS OR FRAUDULENT STATEMENTS OR REPRESENTATIONS HEREIN COULD CONSTITUTE A FELONY PUNISHABLE UNDER FEDERAL STATUTES.

A. L. TRISSLER, LAB TESTING MANAGER

Avesta Sheffield Plate Inc.
P.O. Box 370

WASHINGTON STEEL
A LUKENS COMPANY

TEST CERTIFICATE 2 52114

CUSTOMER P.O.: 731649950306
DESCRIPTION: 1 - RECTANGLE .375 -X- 120 -X- 360

PAGE ~~NO. 01~~ ~~02~~
FILE NO: 8697-03-16
DATE: 05/03/96
MILL ORDER NO: 16558-001

SOLD TO:
WILLIAMS & CO. INCORPORATED
201 PENNSYLVANIA AVENUE
PITTSBURGH PA 15233

SEND TO: 01
TEST REPORT WITH SHIPMENT

SHIP TO:
WILLIAMS & CO. INC.
7840 REINHOLD DRIVE
CINCINNATI OH 45237

PSI MIC NO. A542

THIS MATERIAL HAS BEEN MANUFACTURED AND TESTED IN ACCORDANCE WITH PURCHASE ORDER REQUIREMENTS AND SPECIFICATIONS:

ILLI A240 YR 93 TYPE 304L
STM A240-94A TYPE 304/304L, ASME SA240
RACTICE A & E, ASTM A480-94B, ASTM A276-94B
ASIM A240 TYPE 304L
95 EDITION TYPE 304/304L, ASTM A262-93A
XCHEM & MECH PROPERTIES ONLY) TYPE 304/304L

MELT/SLAB / CHEMICAL ANALYSIS

MELT/SLAB	C	MN	P	S	CU	SI	NI	CR	MO	V	TI	B	N
~~0985 /2C~~	✓	✓	✓	✓		✓	✓	✓					✓
Y0985	.014	1.51	.027	.006	.28	.49	9.05	18.20	.28				.0780
ROD ANALYSIS	.018	1.53	.027	.006	.28	.50	8.99	18.12	.29				.0810

PRACTICES

WMS. & CO.
Q.A APPROVED
MAY 08 '96
SVM

TENSILES / CHARPY V IMPACTS

PE	YLD (PSI X 100)	TENS X 100	% ELONG 2"	% R.A.	TYPE	TEMP	MILS LATERAL EXPANSION	% SHEAR
X1	40	82	72.0	54.0				

OTHER TESTS PERFORMED

BRINELL 156
CORROSION A262E SATISFACTORY TEST LOC-B

PROCESS SYSTEMS INT'L., INC.
Reviewed this report and it complies with SA/~~SS~~ 240 Gr. 304L
93 Edition, _____ Addenda
By C Wojciechowski Date 9-9-96

INFORMATION

EIGHT PER PIECE = 4949 LBS. / 2250 KG
O WELD REPAIR WAS PERFORMED BY LUKENS.
ERCURY OR MERCURY COMPOUNDS ARE NOT USED IN THE
ANUFACTURE OF LUKENS'/WASHINGTON'S PRODUCTS.
CORROSION TEST PER ASTM A262 PRACTICE A & E.
* SIZE = .3750"NOM X 120.0000"NOM X 380.0000"ACT X WGT. = 4909

HEAT TREAT CYCLES - MATL. OR TESTS - DEG FAHR.

MATL	TEST	NOM TEMP	MIN TEMP	MAX TEMP	HOLD MINS.	COOL METHOD	END TEMP
X	X	1950			0012	WQ	

HEAT TREAT CYCLES - TESTS ONLY - DEG FAHR.

START END TEMP	NOM TEMP	MIN TEMP	MAX TEMP	HOLD MINS.	HEAT RATE MAX	COOL RATE MAX

WE HEREBY CERTIFY THE ABOVE INFORMATION IS CORRECT:

Quality Assurance Laboratory
Coatesville, PA 19320

ELINORE ZAPLITNY
SUPERVISOR - TEST REPORTING

FORM NO. 2221TW (10/93)

Burnham, PA 17009
Tel: 717-248-4911

STANDARD STEEL
A Division of FREEDOM FORGE Corporation

QP090-F1

METALLURGICAL CERTIFICATION

PAGE 1

FOR: PROCESS SYS INT MA
CUSTOMER ORDER NUMBER 555492
REPORT DATE: 11/01/96

PCS SHIPPED: 6
01 OUR ORDER NO 532691601
SHIPLIST NO: 58706
PSI MIC NO. A937

PRODUCT

RING
MACHINE 250/500 MICRO TO SIZES SHOWN: 112.5" OD +.06 X 104.25" ID -.06 X 1.50" WD +.06
SPECIFICATION: ASME SA182 GRADE F304L IN ACCORDANCE WITH PROCESS SYSTEMS SPEC.
AV049-2-040 REV 6

V049M003-1

IT-33

CUSTOMER

PROCESS SYSTEMS INTERNATIONAL, INC.
20 WALKUP DRIVE
WESTBOROUGH MA 01581
ATTENTION:

PROCESS SYSTEMS INT'L., INC.
Reviewed this report and it complies with SA/SB- 182 Gr. 304L
95 Edition, ____ Addenda
By C. Watcicki Date 11-7-96

CHEMICAL ANALYSIS

HEAT NO.	C	SI	P	MN	S	NI	CR	MO	V	AL	TI				
S09279															
S09289	.031	.48	.033	1.78	.002	11.72	18.82					N .0530			
	.004	.35	.031	1.76	.004	11.86	19.44					N .0680			

MECHANICAL PROPERTIES

HEAT NUMBER	SERIAL NUMBER	BRINELL	TEN TEMP (F)	TEN BHN	TENSILE LOCATION	UTS (KSI)	YIELD ST (KSI) .20%OFST	% ELONG	%RED AREA	IMPACT DATA LOCATION	TEMP (F)	FT. LBS	% SHR	LAT EXP	GRN SZE
S09279	6I1225A		+75		PROLONG	74.5	37.0	61.0	81.0						
S09279	6I1225B														
S09279	6I1225C														
S09289	6I1568A		+75			72.5	33.5	52.0	78.0						
S09289	6I1568B														
S09289	6I1568C														

3

Tel: 717-248-4911

STANDARD STEEL
A Division of FREEDOM FORGE Corporation

QP090-E1

METALLURGICAL CERTIFICATION

PAGE 1

FOR: PROCESS SYS INT MA

CUSTOMER ORDER NUMBER 555492

REPORT DATE: 10/10/96

PCS SHIPPED: 3

02 OUR ORDER NO 532691602

SHIPLIST NO: 57861

PSI MIC NO. A920

PRODUCT

RING
MACHINE 250/500 MICRO TO SIZES SHOWN: 112.5" OD +.06 X 104.25" ID -.06 X 1.25" WD +.06 V049M004-1
SPECIFICATION: ASME SA182 GRADE F304L IN ACCORDANCE WITH PROCESS SYSTEMS SPEC.
AV049-2-040 REV 6

CUSTOMER

PROCESS SYSTEMS INTERNATIONAL, INC.
20 WALKUP DRIVE
WESTBOROUGH MA 01581
ATTENTION:

PROCESS SYSTEMS INT'L., INC.
Reviewed this report and it complies with SA/SB-182 Gr. 304L
95 Edition, ——— Addenda
By C. Watanski Date 11-6-96

CHEMICAL ANALYSIS

T NO.	C	SI	P	MN	S	NI	CR	MO	V	AL	TI				
09279	.031	.48	.033	1.78	.002	11.72	18.82					N .0530			

MECHANICAL PROPERTIES

EAT MBER	SERIAL NUMBER	BRINELL	TEN TEMP (F)	TEN BHN	TENSILE LOCATION	UTS (KSI)	YIELD ST (KSI) .20%OFST	% ELONG	%RED AREA	IMPACT DATA LOCATION	TEMP (F)	FT. LBS	% SHR	LAT EXP	GRN SZE
09279	6G2855A		+75		PROLONG	74.5	37.0	61.0	81.0						
09279	6G2855B														
09279	6G2855C														

TYPE OF HEAT TREATMENT: SOLUTION TREATED AND QUENCHED

THIS REPORT CERTIFIES THAT THE ABOVE RESULTS ARE CORRECT AS REPORTED AND CONTAINED IN THE COMPANY RECORDS

D.W. Koller

MGR. LABORATORIES

3

Avesta Sheffield

Avesta Sheffield East, Inc. PSI MIC NO. **A486**

Certificate of Analysis and Tests

OUR ORDER 84643 - 06 HEAT & PIECE 39734-1A 8/12/96

SOLD TO: PROCESS SYSTEMS INTERNATIONAL
20 WALKUP DRIVE
WESTBOROUGH MA 01581

SHIP TO: PROCESS SYSTEMS INTERNATIONAL
20 WALKUP DRIVE
WESTBORO MA 01581
737001-01

---------- YOUR ORDER & DATE ----------

555-477✓ 6/17/96

---------- ITEM DESCRIPTION ----------

HEAT & PIECE 39734 - 1A✓
WEIGHT 2121

FINISH 1
GRADE 304L✓ / 304✓ UNS-S30403 / UNS-S30400
DIMENSIONS .500✓ X 72.187✓ X 195.312 EXACT

PROCESS SYSTEMS INT'L., INC.
Reviewed this report and it complies with (SA) SB 240 Gr. 304L-304
95 Edition, — Addenda
By SS Date 8-27-96

---------- SPECIFICATIONS ----------

V049-2-041 REV0 WITH EXCEPTS
ASTM A480-94B, ASME SA480-95
COUPONS REQUIRED
ASTM A262-93 PRAC A

ASTM A240-95B, ASME SA240-95✓
NO GRIP MARKS-NO WELD REPAIR✓
ASTM A262-93 PRAC E

PLATES & TEST PCS SOLUTION ANNEALED @ 1950 DEGREES FARENHEIT MINIMUM.
THEN WATER COOLED OR RAPIDLY COOLED BY AIR
FREE OF MERCURY CONTAMINATION
HOT ROLLED, ANNEALED & PICKLED (HRAP)✓

---------- MECHANICAL & OTHER TESTS ----------

HARDNESS RB	87✓
GRAIN SIZE	5
YIELD STRENGTH (PSI)	42400✓
TENSILE STRENGTH (PSI)	84000✓
BEND	OK
INTERGRANULAR CORROSION	OK
ELONGATION % IN 2"	58.0✓
REDUCTION OF AREA %	68.0

---------- CHEMICAL COMPOSITION ----------

CARBON	(C)	.015✓
MANGANESE	(MN)	1.50✓
PHOSPHORUS	(P)	.029✓
SULFUR	(S)	.001✓
SILICON	(SI)	.39✓
CHROMIUM	(CR)	18.51✓
NICKEL	(NI)	8.58✓
COBALT	(CO)	.11
COPPER	(CU)	.45
MOLY	(MO)	.40
NITROGEN	(N)	.06✓

KNOWINGLY & WILLFULLY FALSIFYING OR CONCEALING A MATERIAL FACT ON THIS FORM, OR MAKING FALSE, FICTITIOUS OR FRAUDULENT STATEMENTS OR REPRESENTATIONS HEREIN COULD CONSTITUTE A FELONY PUNISHABLE UNDER FEDERAL STATUTES.

J. BONGARDT, LAB MANAGER

P.O. BOX 1975
Baltimore, Maryland 21203
Telephone: (410) 522-6200

PSI MIC NO. A536

Avesta Sheffield

Avesta Sheffield Plate Inc.

IT-2

Certificate of Analysis and Tests

OUR ORDER 84645 - 11 HEAT & PIECE 39361-2B 8/30/96

SOLD TO: PROCESS SYSTEMS INTERNATIONAL
20 WALKUP DRIVE
WESTBOROUGH MA 01581

SHIP TO: PROCESS SYSTEMS INTERNATIONAL
20 WALKUP DRIVE
WESTBORO MA 01581
737001-01

---------- YOUR ORDER & DATE ----------

555-477 6/17/96

---------- ITEM DESCRIPTION ----------

HEAT & PIECE 39361 - 2B
WEIGHT 1549
FINISH 1
GRADE 304L / 304 UNS-S30403 / UNS-S30400
DIMENSIONS .250 X 60.125 X 332.312 EXACT

---------- SPECIFICATIONS ----------

V049-2-041 REV0 WITH EXCEPTS
ASTM A480-94B, ASME SA480-95
COUPONS REQUIRED
ASTM A262-93 PRAC A

ASTM A240-95B, ASME SA240-95
NO GRIP MARKS-NO WELD REPAIR
ASTM A262-93 PRAC E

PLATES & TEST PCS SOLUTION ANNEALED @ 1950 DEGREES FARENHEIT MINIMUM.
THEN WATER COOLED OR RAPIDLY COOLED BY AIR
FREE OF MERCURY CONTAMINATION
HOT ROLLED, ANNEALED & PICKLED (HRAP)

---------- MECHANICAL & OTHER TESTS ----------

HARDNESS RB	84
YIELD STRENGTH (PSI)	43373 ✓
TENSILE STRENGTH (PSI)	84880 ✓
BEND	OK
INTERGRANULAR CORROSION	OK
ELONGATION % IN 2"	53.9 ✓
REDUCTION OF AREA %	72.4

---------- CHEMICAL COMPOSITION ----------

CARBON	(C)	.015 ✓
MANGANESE	(MN)	1.58 ✓
PHOSPHORUS	(P)	.027 ✓
SULFUR	(S)	.001 ✓
SILICON	(SI)	.42 ✓
CHROMIUM	(CR)	18.23 ✓
NICKEL	(NI)	8.64 ✓
COBALT	(CO)	.11
COPPER	(CU)	.48
MOLY	(MO)	.41
NITROGEN	(N)	.07 ✓

PROCESS SYSTEMS INT'L., INC.
Reviewed this report and it complies
with SA/SB-240 Gr 304/304L
05 Edition, ____ Addenda
By C. Wotcicki Date 9-5-96

KNOWINGLY & WILLFULLY FALSIFYING OR CONCEALING A MATERIAL FACT ON THIS FORM, OR MAKING FALSE, FICTITIOUS OR FRAUDULENT STATEMENTS OR REPRESENTATIONS HEREIN COULD CONSTITUTE A FELONY PUNISHABLE UNDER FEDERAL STATUTES.

A. L. TRISSLER, LAB TESTING MANAGER

Avesta Sheffield Plate Inc.
P.O. Box 370

Avesta Sheffield

Avesta Sheffield East, Inc.

PSI MIC NO. **A486**

Certificate of Analysis and Tests

OUR ORDER 84643 - 06 HEAT & PIECE 39734-1A 8/12/96

SOLD TO: PROCESS SYSTEMS INTERNATIONAL
20 WALKUP DRIVE
WESTBOROUGH MA 01581

SHIP TO: PROCESS SYSTEMS INTERNATIONAL
20 WALKUP DRIVE
WESTBORO MA 01581
737001-01

---------- YOUR ORDER & DATE ----------

555-477✓ 6/17/96

---------- ITEM DESCRIPTION ----------

HEAT & PIECE 39734 - 1A✓
WEIGHT 2121

FINISH 1✓
GRADE 304L✓ / 304✓ UNS-S30403 / UNS-S30400
DIMENSIONS .500✓ X 72.187✓ X 195.312✓ EXACT

PROCESS SYSTEMS INT'L., INC.
Reviewed this report and it complies
with (SA)SB- 240 Gr. 304L-304
95 Edition, — Addenda
By SS Date 8-27-96

---------- SPECIFICATIONS ----------

V049-2-041 REV0 WITH EXCEPTS
ASTM A480-94B, ASME SA480-95
COUPONS REQUIRED
ASTM A262-93 PRAC A

ASTM A240-95B, ASME SA240-95✓
NO GRIP MARKS-NO WELD REPAIR✓
ASTM A262-93 PRAC E

PLATES & TEST PCS SOLUTION ANNEALED @ 1950 DEGREES FARENHEIT MINIMUM.
THEN WATER COOLED OR RAPIDLY COOLED BY AIR
FREE OF MERCURY CONTAMINATION
HOT ROLLED, ANNEALED & PICKLED (HRAP)✓

---------- MECHANICAL & OTHER TESTS ----------

HARDNESS RB	87✓
GRAIN SIZE	5
YIELD STRENGTH (PSI)	42400✓
TENSILE STRENGTH (PSI)	84000✓
BEND	OK
INTERGRANULAR CORROSION	OK
ELONGATION % IN 2"	58.0✓
REDUCTION OF AREA %	68.0

---------- CHEMICAL COMPOSITION ----------

CARBON	(C)	.015✓
MANGANESE	(MN)	1.50✓
PHOSPHORUS	(P)	.029✓
SULFUR	(S)	.001✓
SILICON	(SI)	.39✓
CHROMIUM	(CR)	18.51✓
NICKEL	(NI)	8.58✓
COBALT	(CO)	.11
COPPER	(CU)	.45
MOLY	(MO)	.40
NITROGEN	(N)	.06✓

KNOWINGLY & WILLFULLY FALSIFYING OR CONCEALING A MATERIAL FACT ON THIS FORM, OR MAKING FALSE, FICTITIOUS OR FRAUDULENT STATEMENTS OR REPRESENTATIONS HEREIN COULD CONSTITUTE A FELONY PUNISHABLE UNDER FEDERAL STATUTES.

J. BONGARDT, LAB MANAGER

P.O. BOX 1975
Baltimore, Maryland 21203
Telephone: (410) 522-6200

WASHINGTON STEEL
A LUKENS COMPANY

TEST CERTIFICATE 2 20114

CUSTOMER P.O.: 731649950306
DESCRIPTION: 1 - RECTANGLE .375 -X- 120 -X- 360

PAGE ~~NO. 01~~ ~~02~~
FILE NO: 8697-03-16
DATE: 05/03/96
MILL ORDER NO: 16558-001

SOLD TO:
WILLIAMS & CO. INCORPORATED
901 PENNSYLVANIA AVENUE
PITTSBURGH PA 15233

SEND TO: 01
TEST REPORT WITH SHIPMENT

SHIP TO:
WILLIAMS & CO. INC.
7540 REINHOLD DRIVE
CINCINNATI OH 45237

PSI MIC NO. A542

THIS MATERIAL HAS BEEN MANUFACTURED AND TESTED IN ACCORDANCE WITH PURCHASE ORDER REQUIREMENTS AND SPECIFICATIONS:

ILLI A240,YR 93 TYPE-304L ASTM A240 TYPE-304L
STM A240-94A TYPE 304/304L, ASME SA240 95 EDITION TYPE 304/304L, ASTM A262-93A
RACTICE A & E, ASTM A480-94B, ASTM A276-94B (CHEM & MECH PROPERTIES ONLY) TYPE 304/304L

CHEMICAL ANALYSIS

MELT/SLAB	C	MN	P	S	CU	SI	NI	CR	MO	V	TI	B	N
0985 /2C	✓	✓	✓	✓	✓	✓	✓	✓	✓				✓
Y0985	.014	1.51	.027	.006	.28	.49	9.05	18.20	.26				.0780
ROD ANALYSIS	.018	1.53	.027	.006	.28	.50	8.99	18.16	.29				.0810

PRACTICES

WMS. & CO. Q.A APPROVED MAY 08 '96

TENSILES

PE	YLD (PSI	TENS X 100)	% ELONG 2"	% R.A.
X1	40[illegible] ✓	826 ✓	72.0 ✓	54.0 ✓

CHARPY V IMPACTS

TYPE	TEMP	MILS LATERAL EXPANSION	% SHEAR

OTHER TESTS PERFORMED

BRINELL 156 TEST LOC-B
CORROSION A262E SATISFACTORY

PROCESS SYSTEMS INT'L., INC.
Reviewed this report and it complies with SA/~~SB~~ 240 Gr. 304L
93 Edition, _____ Addenda
By C Wozniak Date 9-9-96

INFORMATION

EIGHT PER PIECE = 4949 LBS. 2250 KG.
O WELD REPAIR WAS PERFORMED BY LUKENS.
ERCURY OR MERCURY COMPOUNDS ARE NOT USED IN THE
ANUFACTURE OF LUKENS'/WASHINGTON'S PRODUCTS.
** CORROSION TEST PER ASTM A262 PRACTICE A & E. **
* SIZE = .3750"NOM X 120.0000"NOM X 380.0000"ACT X WGT. = 4909

HEAT TREAT CYCLES - MATL. OR TESTS - DEG FAHR.

MATL	TEST	NOM TEMP	MIN TEMP	MAX TEMP	HOLD MINS.	COOL METHOD	END TEMP
X	X	1950			0012	WQ	

HEAT TREAT CYCLES - TESTS ONLY - DEG FAHR.

START END TEMP	NOM TEMP	MIN TEMP	MAX TEMP	HOLD MINS.	HEAT RATE MAX	COOL RATE MAX

WE HEREBY CERTIFY THE ABOVE INFORMATION IS CORRECT:

Quality Assurance Laboratory
Coatesville, PA 19320

ELINORE ZAPLITNY
SUPERVISOR - TEST REPORTING.

FORM NO. 2221TW (10/93)

Tel: 717-248-4011

STANDARD STEEL
QP090-F2
A Division of FREEDOM FORGE Corporation

FOR: PROCESS SYS INT MA
CUSTOMER ORDER NUMBER 555492
REPORT DATE: 09/13/96

IT5

PCS SHIPPED: 30
04 OUR ORDER NO 432620501
SHIPLIST NO: 56855
PSI MIC NO. A759

PRODUCT

RING
MACHINE 250/500 MICRO TO SIZES SHOWN: 68.5" OD +.06 X 60.0" ID -.06 X 1.625" WD (*)
SPECIFICATION: ASME SA182 GRADE F304L IN ACCORDANCE WITH PROCESS SYSTEMS SPEC.
AV049-2-040 REV 6
(*) +.06

V049M135-1

CUSTOMER

PROCESS SYSTEMS INTERNATIONAL, INC.
20 WALKUP DRIVE
WESTBOROUGH MA 01581
ATTENTION:

CHEMICAL ANALYSIS

HEAT NO.	C	SI	P	MN	S	NI	CR	MO	V	AL	TI				
S09279															
809280	.031	.48	.033	1.78	.002	11.72	18.82					N .0530			
	.031	.45	.032	1.72	.001	11.48	18.55					N .0500			

MECHANICAL PROPERTIES

HEAT NUMBER	SERIAL NUMBER	BRINELL	TEN TEMP (F)	TEN BHN	TENSILE LOCATION	UTS (KSI)	YIELD ST (KSI) .20%OFST	% ELONG	%RED AREA	IMPACT DATA LOCATION	TEMP (F)	FT. LBS	% SHR	LAT EXP	GRN SZE
S09279	6G2844A		+75		PROLONG	74.5	37.0	61.0	81.0						
S09279	6G2844B														
S09279	6G2844C														
S09279	6G2844D														
S09279	6G2844E														
S09279	6G2845A														
S09279	6G2845B														
S09279	6G2845C														
S09279	6G2845D														
S09279	6G2845E														

PROCESS SYSTEMS INT'L., INC.
Reviewed this report and it complies with SA/SB-182 Gr. 304L
95 Edition ____ Addenda
By O. Watarecki Date 10-4-96

STANDARD STEEL

A Division of FREDERICK PIPE Corporation

MECHANICAL CERTIFICATION

PAGE 2

FOR: PROCESS SYS INT NA

CUSTOMER ORDER NUMBER 535492 PAGE-2

PCS SHIPPED: 30

REPORT DATE: 09/13/96

04 OUR ORDER NO 432620301

SHIPLIST NO: 56855

MECHANICAL PROPERTIES

HEAT NUMBER	SERIAL NUMBER	BRINELL	TEN TEMP (F)	TEN DHN	TENSILE LOCATION	UTS (KGI)	YIELD ST (KGI) .20%OFST	% ELONG	%RED AREA	IMPACT DATA LOCATION	IMPACT DATA TEMP (F)	IMPACT DATA FT. LBS	IMPACT DATA % SHR	IMPACT DATA LAT EXP	IMPACT DATA GRN SZE
S09279	6028468														
S09279	6028468														
S09279	6028468														
S09279	6028468														
S09279	6028468														
S09280	6028478														
S09280	6028478														
S09280	6028478														
S09280	6028478														
S09280	6028478														
S09280	6028488														
S09280	6028488														
S09280	6028488														
S09280	6028488														
S09280	6028489														
S09280	6028489														
S09280	6028489														
S09280	6028489														
S09280	6028489														

IT-5

↔A759 +75

74.5 ✓ 36.5 ✓ 64.0 79.0 ✓

PSI MIC NO. A759

PROCESS SYSTEMS INT'L, INC.
Reviewed this report and it complies with SA/SB 182 Gr. 304L
95 Edition, ____ Addenda
By C. Watucki Date 10-1-96

TYPE OF HEAT TREATMENT: SOLUTION TREATED AND QUENCHED

THIS REPORT CERTIFIES THAT THE ABOVE RESULTS ARE CORRECT AS REPORTED AND CONTAINED IN THE COMPANY RECORDS

D.W. Kolb
MGR. LABORATORIES

P.5/5 NO.174 STANDARD STEEL M.LAB SEP. 8.1997 11:41AM

Tel: 717-248-4911

STANDARD STEEL QP090-F1

A Division of FREEDOM FORGE Corporation

FOR: PROCESS SYS INT MA

CUSTOMER ORDER NUMBER 555492

REPORT DATE: 09/13/96

PCS SHIPPED: 30

04 OUR ORDER NO 432620501

SHIPLIST NO: 56855

PSI MIC NO. A755

II-5

PRODUCT

RING
MACHINE 250/500 MICRO TO SIZES SHOWN: 60.5" OD +.06 X 60.0" ID -.06 X 1.625" WD
SPECIFICATION: ASME SA182 GRADE F304L IN ACCORDANCE WITH PROCESS SYSTEMS SPEC.
AV049-2-040 REV 6
(A) +.06 V049M135-1

CUSTOMER

PROCESS SYSTEMS INTERNATIONAL, INC.
20 WALKUP DRIVE
WESTBOROUGH MA 01581
ATTENTION:

CHEMICAL ANALYSIS

HEAT NO.	C	SI	P	MN	S	NI	CR	MO	V	AL	TI				
S09279															
S09280	.031	.48	.033	1.78	.002	11.72	18.82					N .0530			
	.031	.45	.032	1.72	.001	11.48	18.55					N .0500			

MECHANICAL PROPERTIES

HEAT NUMBER	SERIAL NUMBER	BRINELL	TEN TEMP (F)	TEN BHN	TENSILE LOCATION	UTS (KSI)	YIELD ST (KSI) .20%OFST	% ELONG	%RED AREA	IMPACT DATA LOCATION	IMPACT DATA TEMP (F)	IMPACT DATA FT. LBS	IMPACT DATA % SHR	IMPACT DATA LAT EXP	GRN SZE
S09279	6G2844A		+75		PROLONG	74.5	37.0	61.0	81.0						
S09279	6G2844B														
S09279	6G2844C														
S09279	6G2844D														
S09279	6G2844E														
S09279	6G2845A														
S09279	6G2845B														
S09279	6G2845C														
S09279	6G2845D														
S09279	6G2845E														

PROCESS SYSTEMS INT'L., INC.
Reviewed this report and it complies with SA/SB- 182 Gr. 304L
95 Edition, — Addenda
By C. Wojciechowski Date 10-1-96

717-258-4911

STANDARD STEEL
A Division of FREEDOM FORGE Corporation

METALLURGICAL CERTIFICATION

FOR: PROCESS SYS INT MA
CUSTOMER ORDER NUMBER 555492 PAGE-2
REPORT DATE: 09/13/96

PCS SHIPPED: 30
04 OUR ORDER NO 432620501
SHIPLIST NO: 56855

MECHANICAL PROPERTIES

HEAT-NUMBER	SERIAL NUMBER	BRINELL	TEN TEMP (F)	TEN BHN	TENSILE LOCATION	UTS (KSI)	YIELD ST (KSI) .20%OFST	% ELONG	%RED AREA	IMPACT DATA LOCATION	IMPACT DATA TEMP (F)	IMPACT DATA FT. LBS	IMPACT DATA % SHR	IMPACT DATA LAT EXP	IMPACT DATA GRN SZE
S09279	6G2846A														
S09279	6G2846B ↔ A 755		IT-5												
S09279	6G2846C														
S09279	6G2846D														
S09279	6G2846E														
S09280	6G2847A		+75			74.5 ✓	36.5 ✓	64.0 ✓	79.0						
S09280	6G2847B														
S09280	6G2847C														
S09280	6G2847D														
S09280	6G2847E														
S09280	6G2848A														
S09280	6G2848B														
S09280	6G2848C														
S09280	6G2848D														
S09280	6G2848E														
S09280	6G2849A														
S09280	6G2849B														
S09280	6G2849C														
S09280	6G2849D														
S09280	6G2849E														

PSI MIC NO. A755

PROCESS SYSTEMS INT'L., INC.
Reviewed this report and it complies
with SA/SB- 182 Gr 304L
95 Edition, _____ Addenda

By C. Wojcicki Date 10-1-96

TYPE OF HEAT TREATMENT: SOLUTION TREATED AND QUENCHED

THIS REPORT CERTIFIES THAT THE ABOVE RESULTS ARE CORRECT AS REPORTED AND CONTAINED IN THE COMPANY RECORDS

D.W. Kobby
MGR. LABORATORIES

STANDARD STEEL
A Division of [illegible]

FOR: PROCESS SYS INT MA
CUSTOMER ORDER NUMBER 555492
REPORT DATE: 09/13/96

PCS SHIPPED: 30
04 OUR ORDER NO 432620501
SHIPLIST NO: 53895

PRODUCT

RING V049M135-1
MACHINE 250/500 MICRO TO SIZES SHOWN: 60.5" OD +.06 X 60.0" ID -.06 X 1.625" WD (*)
SPECIFICATION: ASME SA182 GRADE F304L IN ACCORDANCE WITH PROCESS SYSTEMS SPEC.
AV049-2-040 REV 6
(*) +.06

PSI MIC NO. A772

CUSTOMER

PROCESS SYSTEMS INTERNATIONAL, INC.
20 WALKUP DRIVE
WESTBOROUGH MA 01581
ATTENTION:

CHEMICAL ANALYSIS

HEAT NO.	C	SI	P	MN	S	NI	CR	MO	V	AL	TI				
S09279															
S09280	.031	.48	.033	1.78	.002	11.72	18.82					N .0530			
	.031 ✓	.45 ✓	.032 ✓	1.72 ✓	.001 ✓	11.48 ✓	18.55 ✓					N .0500			

MECHANICAL PROPERTIES

HEAT NUMBER	SERIAL NUMBER	BRINELL	TEN TEMP (F)	TEN BHN	TENSILE LOCATION	UTS (KSI)	YIELD ST (KSI) .20%OFST	% ELONG	%RED AREA	IMPACT DATA LOCATION	TEMP (F)	FT. LBS	% SHR	LAT EXP	GRN SZE
S09279	6G2844A		+75		PROLONG	74.5 ✓	37.0 ✓	61.0 ✓	81.0						
S09279	6G2844B														
S09279	6G2844C														
S09279	6G2844D														
S09279	6G2844E														
S09279	6G2845A														
S09279	6G2845B														
S09279	6G2845C														
S09279	6G2845D														
S09279	6G2845E														

PROCESS SYSTEMS INT'L., INC.
Reviewed this report and it complies
with SA/SB- 182 Gr. 304L
95 Edition, ____ Addenda
By [signature] Date 10-2-96

SEP. 8.1997 11:41AM STANDARD STEEL M.LAB NO.174 P.5/5

STANDARD STEEL

A Division of Freedom Forge Corporation

METALLURGICAL CERTIFICATION PAGE 2

FOR: PROCESS SYS INT MA

CUSTOMER ORDER NUMBER 555492

REPORT DATE: 09/13/96

PCS SHIPPED: 30

04 OUR ORDER NO 432620501

SHIPLIST NO: 56855

MECHANICAL PROPERTIES

HEAT NUMBER	SERIAL NUMBER	BRINELL	TEN TEMP (F)	TEN BHN	TENSILE LOCATION	UTS (KSI)	YIELD ST (KSI) .20XOFST	% ELONG	%RED AREA	IMPACT DATA LOCATION	TEMP (F)	FT. LBS	% SHR	LAT EXP	GRN SZE
S09279	682846A														
S09279	682846B														
S09279	682846C														
S09279	682846D														
S09279	682846E														
S09280	682847A		+75			74.5	36.5	64.0	79.0						
S09280	682847B														
S09280	682847C														
S09280	682847D														
S09280	682847E														
S09280	682848A														
S09280	682848B														
S09280	682848C														
S09280	682848D														
S09280	682848E														
S09280	682849A														
S09280	682849B														
S09280	682849C														
S09280	682849D	← A772													
S09280	682849E														

MIC# A772

PROCESS SYSTEMS INT'L, INC.
Reviewed this report and it complies with SA/SB 182 Gr. 304L
95 Edition, ____ Addenda
By C. Watson Date 10-2-96

[1] TYPE OF HEAT TREATMENT: SOLUTION TREATED AND QUENCHED

THIS REPORT CERTIFIES THAT THE ABOVE RESULTS ARE CORRECT AS REPORTED AND CONTAINED IN THE COMPANY RECORDS

D.W. Koller

MGR. LABORATORIES

WASHINGTON STEEL
A LUKENS COMPANY

TEST CERTIFICATE 2-12123

CUSTOMER P.O.: 731599950306
DESCRIPTION: 1 - RECTANGLE .25 -X- 96 -X- 320

PAGE NO. 01 02
FILE NO: 869/-03-16
DATE: 05/03/96
MILL ORDER NO: 16592-001

D TO:
WILLIAMS & CO. INCORPORATED
901 PENNSYLVANIA AVENUE
IT-3
PITTSBURGH PA 15233

SEND TO: 01
TEST REPORT WITH SHIPMENT

SHIP TO:
WILLIAMS & CO. INC.
7640 REINHOLD DRIVE
CINCINNATI OH 45237

PSI MIC NO. A791

MATERIAL HAS BEEN MANUFACTURED AND TESTED IN ACCORDANCE WITH PURCHASE ORDER REQUIREMENTS AND SPECIFICATIONS:

LLI A240 YR 93 TYPE-304L
TM A240-94A TYPE 304/304L, ASME SA240
ACTICE A & E, ASTM A480-94B, ASTM A276-94B

ASTM A240 TYPE-304L
95 EDITION TYPE 304/304L, ASTM A262-93A
(CHEM & MECH PROPERTIES ONLY) TYPE 304/304L

CHEMICAL ANALYSIS

MELT/SLAB	C	MN	P	S	CU	SI	NI	CR	MO	V	TI	B	N
981 /6CA	✓	✓	✓	✓		✓	✓	✓					✓
Y0981	.027	1.79	.025	.008	.17	.52	8.94	18.21	.21				.0840
OD ANALYSIS	.029	1.81	.024	.007	.17	.53	8.90	18.17	.22				.0830

PRACTICES

WMS. & CO.
Q.A APPROVED
MAY 13 '96

TENSILES

YLD (PSI	TENS X 100)	% ELONG 2"	% R.A.
488	854	73.0	55.0
✓	✓	✓	✓

CHARPY V IMPACTS

TYPE	TEMP	MILS LATERAL EXPANSION	% SHEAR

OTHER TESTS PERFORMED

BEND TEST - LOC/DIR BX - PASS
BRINELL - 146 TEST LOC-B
CORROSION A262E SATISFACTORY

PROCESS SYSTEMS INT'L., INC.
Reviewed this report and it complies
with SA/SB 240 Gr. 304L
96 Edition, — Addenda
By C. Wotaicki Date 5-3-96

INFORMATION

EIGHT PER PIECE = 2381 LBS. 1082 KG.
WELD REPAIR WAS PERFORMED BY LUKENS.
ERCURY OR MERCURY COMPOUNDS ARE NOT USED IN THE
NUFACTURE OF LUKENS'/WASHINGTON'S PRODUCTS.
CORROSION TEST PER ASTM A262 PRACTICE A & E. **
SIZE = .2500"NOM X 96.0000"NOM X 320.0625"ACT X WGT. = 2207

HEAT TREAT CYCLES - MATL. OR TESTS - DEG FAHR.

MATL	TEST	NOM TEMP	MIN TEMP	MAX TEMP	HOLD MINS.	COOL METHOD	END TEMP
X	X	1950			0010	WQ	

HEAT TREAT CYCLES - TESTS ONLY - DEG FAHR.

START END TEMP	NOM TEMP	MIN TEMP	MAX TEMP	HOLD MINS.	HEAT RATE MAX	COOL RATE MAX

E HEREBY CERTIFY THE ABOVE INFORMATION IS CORRECT:

Quality Assurance Laboratory
Coatesville, PA 19320

ELINORE ZAPLITNY
SUPERVISOR - TEST REPORTING

FM NO. 2221TW (10/93)

Tel: 717-248-4911

STANDARD STEEL

A Division of FREEDOM FORGE Corporation

FOR: PROCESS SYS INT MA
CUSTOMER ORDER NUMBER 555472
REPORT DATE: 09/05/96

PCS SHIPPED: 17
02 OUR ORDER NO 432620502
SHIPLIST NO: 5657O

PRODUCT

RING
MACHINE 250/500 MICRO TO SIZES SHOWN: 68.50" OD +.06 X 60.0" ID -.06 X 1.250" WD +.06
SPECIFICATION: ASME SA182 GRADE F304L IN ACCORDANCE WITH PROCESS SYSTEMS SPEC.
AV049-2-040 REV 6

V049M243 1

PSI MIC NO. A576

CUSTOMER

PROCESS SYSTEMS INTERNATIONAL, INC.
20 WALKUP DRIVE
WESTBOROUGH MA 01581
ATTENTION:

PROCESS SYSTEMS INT'L., INC.
Revlewed this report and it complies
with SA/SB- 182 Gr. 304L
95 Edition, ____ Addenda
By C. Wotecki Date 9-11-96

CHEMICAL ANALYSIS

HEAT NO.	C	SI	P	MN	S	NI	CR	MO	V	AL	TI				
S09280	.031	.45	.032	1.72	.001	11.48	18.55			N .0500					

MECHANICAL PROPERTIES

HEAT NUMBER	SERIAL NUMBER	BRINELL	TEN TEMP (F)	TEN BHN	TENSILE LOCATION	UTS (KSI)	YIELD ST (KSI) .20%OFST	% ELONG	%RED AREA	IMPACT LOCATION	IMPACT TEMP (F)	IMPACT FT. LBS	IMPACT % SHR	IMPACT LAT EXP	GRN SIZE
S09280	6G2744A		+75		PROLONG	74.5	36.5	64.0	79.0						
S09280	6G2744B														
S09280	6G2744C														
S09280	6G2744D														
S09280	6G2745A														
S09280	6G2745B														
S09280	6G2746D														
S09280	6G2746E														
S09280	6G2747A														
S09280	6G2747B														
S09280	6G2747C														
S09280	6G2747D														
S09280	6H1504A														
S09280	6H1504B														

Tel: 717-248-4911

STANDARD STEEL

QP096-F1

A Division of FREEDOM FORGE Corporation

FOR: PROCESS SYS INT MA

CUSTOMER ORDER NUMBER 555492

REPORT DATE: 09/13/96

IT-5

PCS SHIPPED: 30

04 OUR ORDER NO 432620501

SHIPLIST NO: 56855

PSI MIC NO. A751

PRODUCT

RING V049M135-1
MACHINE 250/500 MICRO TO SIZES SHOWN: 68.5" OD +.04 X 60.0" ID -.04 X 1.625" WD (*)
SPECIFICATION: ASME SA182 GRADE F304L IN ACCORDANCE WITH PROCESS SYSTEMS SPEC.
AV049-2-040 REV 6
(*) +.06

CUSTOMER

PROCESS SYSTEMS INTERNATIONAL, INC.
20 WALKUP DRIVE
WESTBOROUGH MA 01581
ATTENTION:

CHEMICAL ANALYSIS

HEAT NO.	C	SI	P	MN	S	NI	CR	MO	V	AL	TI				
S09279															
S09280	.031 ✓	.48 ✓	.033 ✓	1.78 ✓	.002 ✓	11.72 ✓	18.82 ✓					N .0530			
	.031	.45	.032	1.72	.001	11.48	18.55					N .0500			

MECHANICAL PROPERTIES

HEAT NUMBER	SERIAL NUMBER	BRINELL	TEN TEMP (F)	TEN BHN	TENSILE LOCATION	UTS (KSI)	YIELD ST (KSI) .20%OFST	% ELONG	%RED AREA	IMPACT LOCATION	IMPACT TEMP (F)	IMPACT FT. LBS	IMPACT % SHR	IMPACT LAT EXP	GRN SZE
S09279	6G2844A		+75		PROLONG	74.5	37.0 ✓	41.0 ✓	81.0 ✓						
S09279	6G2844B														
S09279	6G2844C														
S09279	6G2844D														
S09279	6G2844E														
S09279	6G2845A														
S09279	6G2845B														
S09279	6G2845C														
S09279	6G2845D														
S09279	6G2845E														

A751 IT-5

PROCESS SYSTEMS INT'L., INC.
Reviewed this report and it complies with SA/SB- 182 Gr. 304L
96 Edition, — Addenda

By C. Waraich Date 10-1-96

tel 717-248-3911
STANDARD STEEL
A Division of FREEDOM FORGE Corporation

METALLURGICAL CERTIFICATION

FOR: PROCESS SYS INT MA
CUSTOMER ORDER NUMBER 555492 PAGE-2
REPORT DATE: 09/13/96

PCS SHIPPED: 30
04 OUR ORDER NO 432620501
SHIPLIST NO: 56855

MECHANICAL PROPERTIES

HEAT NUMBER	SERIAL NUMBER	BRINELL	TEN TEMP (F)	TEN BHN	TENSILE LOCATION	UTS (KSI)	YIELD ST (KSI) .20%OFST	% ELONG	%RED AREA	IMPACT DATA LOCATION	TEMP (F)	FT. LBS	% SHR	LAT EXP	GRN SIZE
S09279	6G2846A														
S09279	6G2846B														
S09279	6G2846C														
S09279	6G2846D														
S09279	6G2846E														
S09280	6G2847A		+75			74.5	36.5		64.0			79.0			
S09280	6G2847B														
S09280	6G2847C														
S09280	6G2847D														
S09280	6G2847E														
S09280	6G2848A														
S09280	6G2848B														
S09280	6G2848C														
S09280	6G2848D														
S09280	6G2848E														
S09280	6G2849A														
S09280	6G2849B														
S09280	6G2849C														
S09280	6G2849D														
S09280	6G2849E														

PSI MIC NO. A751

PROCESS SYSTEMS INT'L., INC.
Reviewed this report and it complies
with (SA) SB- 182 Gr. 304L
95 Edition, ____ Addenda

By C. Wojciski Date 10-1-96

TYPE OF HEAT TREATMENT: SOLUTION TREATED AND QUENCHED

THIS REPORT CERTIFIES THAT THE ABOVE RESULTS ARE
CORRECT AS REPORTED AND CONTAINED IN THE COMPANY RECORDS

D.W. Kolb
MGR. LABORATORIES

P.5/5 NO.174 STANDARD STEEL M.LAB SEP. 8.1997 11:41AM

Weld Wire CAD's

SANDVIK Steel

We make Quality happen . . .

MATERIAL CERTIFICA

SANDVIK STEEL COMPANY
P.O. BOX 1220, SCRANTON, PA. 18501 PH. (717) 587-5191
PLANT LOCATION: INTERSTATE 81, WAVERLY EXIT 59

T0065-R/7741/0500

)LD TO: BOC GASES (AIRCO)
LISLE IL

SHIP TO: PROCESS SYSTEMS

ISTOMER PURCHASE ORDER NO.:

NDVIK ORDER NO.: 92899

)RK ORDER / LOT NO.: ---

CERTIFICATE DATE: 10/04/96

QUANTITY: 180 LBS

TAG:

AWS A-5.9

STAINLESS STEEL WELDING WIRE TYPE ER 308L DIAMETER: 1/8"

Filler Metal Analysis, %

Heat S713906

PSI QC CW

C	Si	Mn	P	S	Cr	Ni
.013	.430	1.720	.020	.013	19.88	9.98

Mo	Cb/Nb	Ta	Ti	Cu	Cb/Nb+Ta	N
.250	.010		.005	.150		.055

The material has not come in contact with mercury or mercury-containing compounds.

"Material not touched by hand after final production process cleaning."

Material has been manufactured in accordance with Sandvik Steel Company Quality Manual Revision 10 dated October 1, 1995. Quality system approved to ISO-9002/ANSI/ASQC Q9002-1994.

Bengt H. Berg, Director, Quality and Metallurgy
Daniel Daniani, Quality Engineer

(56119)(10)

5

NDVIK Steel

We make Quality Happen

MATERIAL CERTIFICATE

SANDVIK STEEL COMPANY

P.O. BOX 1220, SCRANTON, PA. 18501 PH. (717) 587-5191

PLANT LOCATION: INTERSTATE 81, WAVERLY EXIT 59

70065-R/7741015OO

D TO: BOC GASES (AIRCO)
LISLE IL

SHIP TO: PROCESS SYSTEMS

TOMER PURCHASE ORDER NO.:

CERTIFICATE DATE: [illegible]

)VIK ORDER NO.: 16249

QUANTITY: 180LB

:K ORDER / LOT NO.:

TAG:

AWS A-5.9

STAINLESS STEEL WELDING WIRE TYPE ER 308L

DIAMETER: 9/32"

Filler Metal Analysis, %

Heat 5440928	C	Si	Mn	P	S	Cr	Ni
	.021	.470	1.800	.014	.013	20.00	9.68
	Mo	Cb/Nb	Ta	Ti	Cu	Cb/Nb+Ta	N
	.020			.002	.040	.030	.053

PSI QC CW

The material has not come in contact with mercury or mercury-containing compounds.

Material not touched by hand after final production process cleaning."

Material has been manufactured in accordance with Sandvik Steel Company Quality Manual Revision 10 dated October 1, 1995. Quality system approved to ISO-9002/ANSI/ASQC Q9002-1994.

BOC GASES
90 RESEARCH ROAD
HINGHAM, MA 02043

Keith M. Kottle, Manager, Quality & Metallurgy
Celeste Brennan, Sr. Quality Engineer

Celeste Brennan/cp

(66119)(10)

(2)

SANDVIK

MATERIAL CERTIFICA

SANDVIK STEEL COMPANY
P.O. BOX [illegible] SCRANTON, PA. 18501 P (717) 587-5191
PLANT LOCATION: INTERSTATE 81, WAYNESBORO EXIT 59

SOLD TO: BOC GASES (AIRCO)
LISLE IL

SHIP TO: AIRCO-NEW ENGLAND
HINGHAM MA

CUSTOMER PURCHASE ORDER NO.: 47910

CERTIFICATE DATE: 7/14/97

SANDVIK ORDER NO.: 16249

QUANTITY: PER PACKING NOTE

WORK ORDER / LOT NO.: 980309

AWS A [illegible] 9

STAINLESS STEEL WELDING WIRE TYPE ER 308L

DIAMETER: 1/16"

Filler Metal Analysis, %

Heat	C	Si	Mn	P	S	Cr	Ni
S713039	.013	.380	1.800	.015	.013	20.06	9.84

PSI QC CW

Mo	Cb/Nb	Ta	Ti	Cu	Cb/Nb+Ta	N
.100			.002	.070	.030	.044

The material has not come in contact with mercury or mercury-containing compounds.

"Material not touched by hand after final production process cleaning."

Material has been manufactured in accordance with Sandvik Steel Company Quality Manual Revision 10 dated October 1, 1995. Quality system approved to ISO-9002/ANSI/ASQC Q9002-1994.

PROCESS SYS
120 LBS
70040-R / 77410500

Keith M. Hottle, Manager, Quality & Metallurgy
Celeste Brennan, Sr. Quality Engineer

Celeste Brennan

15(66119)(10)

CUSTOMER ORIGINAL

BOC GASES
90 RESEARCH ROAD
HINGHAM, MA 02043

56 lbs

XJK8115-02 KOBELCO

PURCHASER
PO 70040-R/774101500
PROCESS SYSTEMS

INSPECTION CERTIFICATE

FLUX CORED WIRE

CERTIFICATE NO.: A 017

DATE OF ISSUE : 1997.01.28

TRADE DESIGNATION	DIMENSION (mm)	MFG.NO.	APPLICABLE SPECIFICATION AND CLASSIFICATION
DW-308L	0.9	B6M1085	AWS A5.22 E308LT0-1 ASME SFA-5.22 E308LT-1

CHEMICAL COMPOSITION (%)

ELEMENTS	C	SI	MN	P	S	CU	NI	CR	MO	NB	N	FN	FS	FNV
DEPOSITED METAL	0.034	0.39	1.22	0.026	0.008	0.05	9.73	18.91	0.11	0.01	0.041	UNIT:FN 6.0	6.8	UNIT:FN 6.0
ELEMENTS														

TENSILE TEST OF DEPOSITED METAL

YIELD POINT	YIELD STRENGTH AT 0.2% OFFSET	TENSILE STRENGTH	ELONGATION
– N /mm²	– N /mm²	584 N /mm²	52 %
– kgf/mm²	– kgf/mm²	59.6 kgf/mm²	

IMPACT TEST OF DEPOSITED METAL

TEST TEMP.	ABSORBED ENERGY AVG.
– ℃	– J
	– kgf.m

HARDNESS TEST

VICKERS HARDNESS (AVG.)
–

WELDING CONDITIONS

TYPE OF CURRENT	DCEP	SHIELDING GAS	CO2
AMPERAGE	110 A		
ARC VOLTAGE	25 V		

POSTWELD HEAT TREATMENT

– ℃ x – h

FS = FERRITE (SCHAEFFLER DIAGR.
FN = FERRITE (DELONG DIAGRAM)
FNV= FERRITE (WRC)

WE HEREBY CERTIFY THAT THE TEST RESULTS OF THE ABOVE WELDING MATERIAL ARE AS DESCRIBED HEREIN AND SATISFY THE REQUIREMENTS OF THE APPLICABLE SPECIFICATION.

KOBE STEEL, LTD.
WELDING DIV. FUJISAWA PLANT

CHIEF INSPECTOR

84/09/1997 15:57 7139746424 KOBELCO PAGE 14

BOC GASES

KOBELCO

90 RESEARCH ROAD
HINGHAM, MA 02043

PO# 70040-R / 774101500
PROCESS SYSTEMS

INSPECTION CERTIFICATE

FLUX CORED WIRE

CERTIFICATE NO.: A 002

DATE OF ISSUE : 1997.01.07

TRADE DESIGNATION	DIMENSION (mm)	MFG. NO.	PSI QC CW	APPLICABLE SPECIFICATION AND CLASSIFICATION
DW-309L	0.9	B6M1015		AWS A5.22 E309LT0-1 ASME SFA-5.22 E309LT-1

CHEMICAL COMPOSITION (%)

ELEMENTS	C	SI	MN	P	S	CU	NI	CR	MO	NB	N	FN UNIT:FN	FS	FNW UNIT:FN
DEPOSITED METAL	0.026	0.43	1.10	0.022	0.012	0.04	12.75	22.56	0.04	0.02	0.017	15.0	8.7	12.0
ELEMENTS														

TENSILE TEST OF DEPOSITED METAL

YIELD POINT	YIELD STRENGTH AT 0.2% OFFSET	TENSILE STRENGTH	ELONGATION
− N/mm²	− N/mm²	540 N/mm²	
− kgf/mm²	− kgf/mm²	55.1 kgf/mm²	40 %

IMPACT TEST OF DEPOSITED METAL

TEST TEMP.	ABSORBED ENERGY AVG.	
− ℃	− J	
	− kgf.m	

HARDNESS TEST

VICKERS HARDNESS (AVG.)

−

WELDING CONDITIONS

TYPE OF CURRENT	DCEP		SHIELDING GAS	CO2
AMPERAGE	110	A		
ARC VOLTAGE	25	V		

POSTWELD HEAT TREATMENT

− ℃x − H

FS = FERRITE (SCHAEFFLER DIAGRAM)
FN = FERRITE (DELONG DIAGRAM)
FNW = FERRITE (WRC)

WE HEREBY CERTIFY THAT THE TEST RESULTS OF THE ABOVE WELDING MATERIAL ARE AS DESCRIBED HEREIN AND SATISFY THE REQUIREMENTS OF THE APPLICABLE SPECIFICATION.

KOBE STEEL, LTD.
WELDING DIV. FUJISAWA PLANT

CHIEF INSPECTOR

SANDVIK Steel

We make Quality happen

MATERIAL CERTIFICAT

SANDVIK STEEL COMPANY
P.O. BOX 1220, SCRANTON, PA. 18501 PH. (717) 587-5191
PLANT LOCATION: INTERSTATE 81, WAVERLY EXIT 59

SOLD TO: BOC GASES (AIRCO)
LISLE IL

SHIP TO:

CUSTOMER PURCHASE ORDER NO.:

CERTIFICATE DATE: 4/21/97

SANDVIK ORDER NO.: 12603

QUANTITY: PER PACKING NOTE

WORK ORDER / LOT NO.:

TAG:

AWS A-5.9

STAINLESS STEEL WELDING WIRE TYPE ER 308L

DIAMETER: 3/32"

Filler Metal Analysis, %

Heat S71297G	C	Si	Mn	P	S	Cr	Ni
	.013	.440	1.800	.015	.015	19.96	9.63

PSI QC CW

Mo	Cb/Nb	Ta	Ti	Cu	Cb/Nb+Ta	N
.070			.002	.060	.030	.035

The material has not come in contact with mercury or mercury-containing compounds.

"Material not touched by hand after final production process cleaning."

Material has been manufactured in accordance with Sandvik Steel Company Quality Manual Revision 10 dated October 1, 1995. Quality system approved to ISO-9002/ANSI/ASQC Q9002-1994.

Keith M. Hottle, Manager, Quality & Metallurgy
Celeste Brennan, Sr. Quality Engineer

Celeste Brennan/cf

15(66119)(10)

BOC GASES
90 RESEARCH ROAD
HINGHAM, MA 02043

PROCESS SYSTEMS
120 LBS 308L 3/32
70040-R/774101500

(6)

(12)

CUSTOMER ORIGINAL

SANDVIK Steel

We make Quality happen . . .

MATERIAL CERTIFICA

SANDVIK STEEL COMPANY

P.O. BOX 1220, SCRANTON, PA. 18501 PH. (717) 587-5191

PLANT LOCATION: INTERSTATE 81, WAVERLY EXIT 59

SOLD TO: BOC GASES (AIRCO)
LISLE IL

SHIP TO: AIRCO-NEW ENGLAND
HINGHAM MA

CUSTOMER PURCHASE ORDER NO.:

CERTIFICATE DATE: 10/04/96

SANDVIK ORDER NO.: 92899

QUANTITY: PER PACKING NOTE

WORK ORDER / LOT NO.:

TAG:

AWS A-5.9

STAINLESS STEEL WELDING WIRE TYPE ER 308L

DIAMETER: 1/8"

Filler Metal Analysis, %

Heat S 711088	C	Si	Mn	P	S	Cr	Ni
PSI QC CW	.013	.430	1.720	.020	.013	19.88	9.98

Mo	Cb/Nb	Ta	Ti	Cu	Cb/Nb+Ta	N
.250	.010		.005	.150		.055

The material has not come in contact with mercury or mercury-containing compounds.

"Material not touched by hand after final production process cleaning."

Material has been manufactured in accordance with Sandvik Steel Company Quality Manual Revision 10 dated October 1, 1995. Quality system approved to ISO-9002/ANSI/ASQC Q9002-1994.

PROCESS SYSTEMS
120 LBS 308L 1/8
70040-R/774101500

Bengt H. Berg, Director, Quality and Metallurgy
Daniel Damiani, Quality Engineer

15(66119)(10)

5

CUSTOMER ORIGINAL

(7)

SANDVIK Steel

make Quality happen

MATERIAL CERTIFICATE

SANDVIK STEEL COMPANY

P.O. BOX 1220, SCRANTON, PA. 18501 PH. (717) 587-5191
PLANT LOCATION: INTERSTATE 81, WAVERLY EXIT 59

SOLD TO: BOC GASES (AIRCO)
LISLE IL

SHIP TO: Process Systems Intl
7-8-97

CUSTOMER PURCHASE ORDER NO.: 70038-R/774101500

CERTIFICATE DATE: 4/21/97

SANDVIK ORDER NO.: 12603

QUANTITY: PER PACKING NOTE

WORK ORDER / LOT NO.:

TAG:

AWS A-5.9

.035

STAINLESS STEEL WELDING WIRE TYPE ER 308L

DIAMETER: 3/32 120 LB

Filler Metal Analysis, %

Heat	C	Si	Mn	P	S	Cr	Ni
3713617	.013	.440	1.800	.015	.015	19.96	9.63

PSI QC CW

Mo	Cb/Nb	Ta	Ti	Cu	Cb/Nb+Ta	N
.070			.002	.060	.030	.035

The material has not come in contact with mercury or mercury-containing compounds.

"Material not touched by hand after final production process cleaning."

Material has been manufactured in accordance with Sandvik Steel Company Quality Manual Revision 10 dated October 1, 1995. Quality system approved to ISO-9002/ANSI/ASQC Q9002-1994.

BOC GASES
90 RESEARCH ROAD
HINGHAM, MA 02043

Keith M. Hottle, Manager, Quality & Metallurgy
Celeste Brennan, Sr. Quality Engineer

Celeste Brennan/cp

15(66119)(10)

8

HARRIS-WELCO | 1051 YORK ROAD P.O. BOX 69 | KINGS MOUNTAIN, NC 28086

SOLDERING, BRAZING & WELDING PRODUCTS

CERTIFICATE OF COMPLIANCE

PROCESS SYSTEMS INTL
P.O. 70038R/7741000

JGP ISSUE DATE: 08-30-96
DATE SENT 6-27-97

HEAT NUMBER/LOT NUMBER: 6120287803 — 60LB
E50836-K1 — 20LB

CHEMICAL COMPOSITION LIMITS

ALLOY: 308L
SPEC : AWS A5.9-93 ER308L

CARBON			.030	SILICON	.300	-	.650
MANGANESE	1.000	-	2.500	PHOSPHORUS			.030
SULFUR			.030	CHROMIUM	19.500	-	22.000
NICKEL	9.000	-	11.000	MOLYBDENUM			.750
TANTALUM			.500	CB + TA			.500
TITANIUM			.600	COPPER			.750
NITROGEN			.600	COBALT			.500
MAGNESIUM			.500	OTHER			.5
NIOBIUM			.500				

PSI QC CW 1-7-97

PSI QC CW 1-7-97

SINGLE VALUES ARE MAXIMUM UNLESS OTHERWISE SPECIFIED.

SAFETY SILV, STAY SILV, STAY CLEAN, STAY BRITE & BRIDGIT ARE REGISTERED TRADEMARKS OF J.W. HARRIS CO., INC

WE CERTIFY THAT THE ITEMS AND/OR MATERIALS LISTED ABOVE ARE IN ACCORDANCE WITH ALL APPLICABLE PURCHASE SPECIFICATIONS HAVING PASSED OUR INSPECTIONS AS NOTED.

Janice Pittman
CERTIFICATION CLERK

BOC GASES
90 RESEARCH ROAD
HINGHAM, MA 02043

(9)

THE ESAB GROUP, INC.
1500 Karen Lane, Hanover, PA 17331

CERTIFICATE OF TYPICAL ANALYSIS

11/19/96 PROCESS SYSTEMS INTL

BOC GASES
90 RESEARCH ROAD
HINGHAM, MA 02043

7-14-97 Order No.: 700381/7741000

This Material Conforms to Specification:
AWS A5.20-95, ASME SFA 5.20

Trade Name
or Trademark: Dual Shield II 70 Ultra

Diameter Size: .035" x 33# Spool

Type: E71T-1* / E71T-12M

Weight: 132 LB

X-Rays Satisfactory

Lot Number: 49455 — 66 LB ✓
49720 — 33 LB ✓
50293 — 33 LB ✓

PSI
QC
CW

Typical Chemical Properties		(Specification Requirements)
Carbon:	.02	(.15 Max.)
Manganese:	1.10	(1.60 Max.)
Chromium:	.04	(.20 Max.)
Nickel:	.01	(.50 Max.)
Silicon:	.34	(.90 Max.)
Columbium+: Tantalum:		
Molybdenum:	.01	(.30 Max.)
Tungsten:		
Copper:	.01	(.35 Max.)
Titanium:		
Phosphorus:	.013	(.03 Max.)
Sulphur:	.010	(.03 Max.)
Vanadium:	.02	(.08 Max.)

Hydrogen: 4.2 ml/100 gr. of weld metal

Fillets: Vertical-Up/Overhead

Shielding Gas: 75% AR/ 25% CO_2

Typical Mechanical Properties

	As Welded	MPa
Yield Strength (Psi)	70,000	483
Tensile Strength (Psi)	76,800	530
Elongation (2"), %	32.0	
Red. of Area, %	74.6	
Charpy V-Notch Impacts		
@ -20°F. (ft.-lbs.)	117	
@ -29°C. (Joules)	159	

(Specification Requirements)

Minimum Unless Otherwise Stated	As Welded	MPa
Yield Strength (Psi)	58,000	400
Tensile Strength (Psi)	70-90,000	480-620
Elongation (2"), %	22.0	22
Red. of Area, %	----	--
Charpy V-Notch Impacts		
@ -20°F. (ft.-lbs.)	20	
@ -29°C. (Joules)	27	

* No data being issued for E71T-1 classification using the CO_2 shielding gas.

The undersigned certifies that the product supplied will meet the requirements of the applicable AWS Filler Metal Specification when tested in accordance with that specification, and that no significant change has been made in the elements described in the qualification approval.

BOC GASES
90 RESEARCH ROAD
HINGHAM, MA 02043

By: D. A. Smith

D. A. Smith, Supervisor, Q. A. Services

SANDVIK

MATERIAL CERTIFICATE

SANDVIK STEEL COMPANY
P.O. BOX 1220, SCRANTON, PA. 18501 PH. (717) 587-5191
PLANT LOCATION: INTERSTATE 81, WAVERLY EXIT 59

SOLD TO: PROCESS SYS SHIP TO:

CUSTOMER PURCHASE ORDER NO. 70029R/774101500 CERTIFICATE DATE: 4/25/97

SANDVIK ORDER NO. QUANTITY: 120 LBS

WORK ORDER / LOT NO.: 978457 TAG:

AWS A-5.9

STAINLESS STEEL WELDING WIRE TYPE ER 308L DIAMETER: 3/32"

Filler Metal Analysis, %

Heat	C	Si	Mn	P	S	Cr	Ni
S712976	.013	.440	1.800	.015	.015	19.96	9.63

	Mo	Cb/Nb	Ta	Ti	Cu	Cb/Nb+Ta	N
	.070			.002	.060	.030	.035

The material has not come in contact with mercury or mercury-containing compounds.

"Material not touched by hand after final production process cleaning."

Material has been manufactured in accordance with Sandvik Steel Company Quality Manual Revision 10 dated October 1, 1995. Quality system approved to ISO-9002/ANSI/ASQC Q9002-1994.

BOC GASES
90 RESEARCH ROAD
HINGHAM, MA 02043

Keith M. Hottle, Manager, Quality & Metallurgy
Celeste Brennan, Sr. Quality Engineer

Celeste Brennan/cp

15(66113)(10)

(11)

CUSTOMER ORIGINAL

SANDVIK Steel

We make Quality happen

MATERIAL CERTIFICA

SANDVIK STEEL COMPANY
P.O. BOX 1220, SCRANTON, PA. 18501 PH. (717) 587-5191
PLANT LOCATION: INTERSTATE 81, WAVERLY EXIT 59

SOLD TO: PROCESS SYSTEMS

SHIP TO: AIRCO-NEW ENGLAND
HINGHAM MA

CUSTOMER PURCHASE ORDER NO.: 70029R/774101500

CERTIFICATE DATE: 3/20/97

SANDVIK ORDER NO.:

QUANTITY:

WORK ORDER / LOT NO.: 976164

TAG:

AWS A-5.9

STAINLESS STEEL WELDING WIRE TYPE ER 308L

DIAMETER: 1/16"

Filler Metal Analysis, %

Heat	C	Si	Mn	P	S	Cr	Ni
S711375	.007	.400	1.800	.014	.012	20.02	9.85

	Mo	Cb/Nb	Ta	Ti	Cu	Cb/Nb+Ta	N
	.010			.002	.030	.030	.055

The material has not come in contact with mercury or mercury-containing compounds.

"Material not touched by hand after final production process cleaning."

Material has been manufactured in accordance with Sandvik Steel Company Quality Manual Revision 10 dated October 1, 1995. Quality system approved to ISO-9002/ANSI/ASQC Q9002-1994.

Keith M. Bottle, Manager, Quality & Metallurgy
Celeste Brennan, Sr. Quality Engineer

Celeste Brennan/cc

15(66119)(10)

BOC GASES
90 RESEARCH ROAD
HINGHAM, MA 02043

(12)

90 RESEARCH ROAD
HINGHAM, MA 02043

PO. 70031R/774101500

X/11

KOBEL

PURCHASER
Process Systems Intl

INSPECTION CERTIFICATE
FLUX CORED WIRE

CERTIFICATE No. : D 021
DATE OF ISSUE : 1997.04.24

TRADE DESIGNATION	DIMENSION (mm)	MFG. NO	APPLICABLE SPECIFICATION AND CLASSIFICATIO
DW-309L	1.2	B6F2110382 (PSI QC CW)	AWS A5.22-95 E309LT0-1 ASME SFA-5.22 E309LT- (1995 Edition)

CHEMICAL COMPOSITION (%)

ELEMENTS	C	SI	MN	P	S	CU	NI	CR	MO	NB	N	FN	FS	FNW
DEPOSITED METAL	0.024	0.44	1.25	0.018	0.013	0.02	12.78	23.76	0.02	<0.01	0.011	UNIT:FN 19.7	9.7	UNIT:FN 11.6

TENSILE TEST OF DEPOSITED METAL				IMPACT TEST OF DEPOSITED METAL			HARDNESS TEST
YIELD POINT	YIELD STRENGTH AT 0.2% OFFSET	TENSILE STRENGTH	ELONGATION	TEST TEMP.	ABSORBED ENERGY AVG.	ABSORBED ENERGY —	—
— N/mm²	— N/mm²	555 N/mm²	37 %	— ℃	— J	—	—
— MPa	— MPa	555 MPa			— kgf·m		

WELDING CONDITIONS				POSTWELD HEAT TREATMENT	
TYPE OF CURRENT	DCEP	SHIELDING GAS	CO2		FS = FERRITE(SCHAEFFLER DIAGRAM) FN = FERRITE(DELONG DIAGRAM) WRC = FERRITE(WRC)
AMPERAGE	200 A			— ℃ × — h	
ARC VOLTAGE	29 V				

WE HEREBY CERTIFY THAT THE TEST RESULTS OF THE ABOVE WELDING MATERIAL ARE AS DESCRIBED HEREIN AND SATISFY THE REQUIREMENTS OF THE APPLICABLE SPECIFICATION.

KOBE STEEL, LTD
WELDING DIV. FUJISAWA PLANT

CHIEF INSPECTOR

REMARKS: CAPITAL LETTERS ARE USED EXCEPT FOR UNIT.

SANDVIK Steel

We make Quality happen . . .

MATERIAL CERTIFICAT

SANDVIK STEEL COMPANY

P.O. BOX 1220, SCRANTON, PA. 18501 PH. (717) 587-5191

PLANT LOCATION: INTERSTATE 81, WAVERLY EXIT 59

SOLD TO: BOC GASES (AIRCO)
LISLE IL

SHIP TO: AIRCO-NEW ENGLAND
HINGHAM MA

CUSTOMER PURCHASE ORDER NO.: 48184

CERTIFICATE DATE: 6/10/97

SANDVIK ORDER NO.: 17126

QUANTITY: PER PACKING NOTE

WORK ORDER / LOT NO.: 979336

TAG: 848523-01

AWS A-5.9

STAINLESS STEEL WELDING WIRE TYPE ER 308LSI

DIAMETER: .035"

Filler Metal Analysis, %

Heat	C	Si	Mn	P	S	Cr	Ni
S712152 -60LB	.014	.840	1.700	.016	.013	19.50	10.23

Mo	Cb/Nb	Ta	Ti	Cu	Cb/Nb+Ta	N
.030			.002	.040	.020	.042

PSI QC CW

Process Systems Intl
PO 70031R/77410/500

The material has not come in contact with mercury or mercury-containing compounds.

BOC GASES
90 RESEARCH ROAD
HINGHAM, MA 02043

Keith M. Hottle, Manager, Quality & Metallurgy

15(03030, REV.2)(10)

(14)

90 RESEARCH ROAD
HINGHAM, MA 02043

PO. 70031R/774101500 6-13-97 X/11 KOBE

PURCHASER
Process Systems Intl

INSPECTION CERTIFICATE
FLUX CORED WIRE

CERTIFICATE No. : D 021
DATE OF ISSUE : 1997.04.24

TRADE DESIGNATION	DIMENSION (mm)	MFG. NO	APPLICABLE SPECIFICATION AND CLASSIFICATI
DW-309L	.035 84LB	B6M1015 (PSI QC CW)	AWS A5.22-95 E309LT0-1 ASME SFA-5.22 E309LT- (1995 Edition)

CHEMICAL COMPOSITION (%)

ELEMENTS	C	SI	MN	P	S	CU	NI	CR	MO	NB	N	FN	FS	FNW
DEPOSITED METAL	0.024	0.44	1.25	0.018	0.013	0.02	12.78	23.76	0.02	<0.01	0.011	UNIT:FN 19.7	9.7	UNIT:FN 11.6

TENSILE TEST OF DEPOSITED METAL				IMPACT TEST OF DEPOSITED METAL			HARDNESS TEST
YIELD POINT	YIELD STRENGTH AT 0.2% OFFSET	TENSILE STRENGTH	ELONGATION	TEST TEMP.	ABSORBED ENERGY AVG.	—	—
— N/mm²	— N/mm²	555 N/mm²	37 %	— ℃	— J	—	—
— MPa	— MPa	555 MPa			— kgf·m		

WELDING CONDITIONS				POSTWELD HEAT TREATMENT	
TYPE OF CURRENT	DCEP	SHIELDING GAS	CO2		FS = FERRITE(SCHAEFFLER DIAGRAM) FN = FERRITE(DELONG DIAGRAM) WRC = FERRITE(WRC)
AMPERAGE	200 A			— ℃ × — h	
VOLTAGE	29 V				

WE HEREBY CERTIFY THAT THE TEST RESULTS OF THE ABOVE WELDING MATERIAL ARE AS DESCRIBED HEREIN AND SATISFY THE REQUIREMENTS OF THE APPLICABLE SPECIFICATION.

KOBE STEEL, LTD
WELDING DIV. FUJISAWA PLANT

CHIEF INSPECTOR

REMARKS: CAPITAL LETTERS ARE USED EXCEPT FOR UNIT.

DELIVERY COPY

Airgas

NORTHEAST AIRGA

SERVING NEW ENGLAND

PICKING TICKET

Sold By: AIRGAS NORTHEAST
199 SOUTHWEST CUT OFF
WORCESTER, MA 01604
800-821-9852

Cust # : 72600

Order # : 306626-00

Ship To: PROCESS SYSTEMS INTERNT'L

Order Date: 04/22/97

20 WALKUP DR
WESTBURY MA 01581-0000

Page : 001 OF 00

NAME : PROCESS SYSTEMS
PO # : 70024R JOB#774-1915
REL# :
PHONE#: 508-898-0285

TER: 142
SLS: 8
BRN: 16

SHIP VIA: CUST PICKUP -NONE-
SHIP COD: 00 UPS: 0
COL/PPD : PREPAID
ROUTE # :

INITIALS: KEN
ORD TYPE: CHRG-OF
TIME : 28-APR-97 12:0
CRT :

QTY SHIP	UNIT HM	DESCRIPTION & HAZARD CLASS	LINE NO	ITEM NUMBER	LOC	QTY ORDER	QTY BKORD	BIN LOC	WT	UNIT AMOUNT	EXT AMO
		********** SHIP COMPLETE ONLY **********		**********							
120	LB	5183 3/32X36 ALUMINUM.	1	ALC 518333236 MSGS: 000078	LAK	120	0		120.0		
120	LB	5183 1/8X36 ALUM.	2	ALC 51831836	LAK	120	0		120.0		

********** This order is complete **********

Total Weight: 240.0

PSI
QC
CW

This is to certify that the above named materials are properly classified, described, packaged, marked and labeled, and are in proper condition for transportation according to the applicable regulations of the Department of Transportation.

Authorized Signature _____

Received by [signature]

16

AlcoTec

A Partnership of Alcoa Weld Wire Company, Inc. and Aluminum Technology Corporation

AlcoTec Wire Company
2750 Aero Park Drive
Traverse City, MI 49686 USA
(616) 941-4111 Phone
(616) 941-8154 Fax
alcotec@traverse.com E-mail

11/08/96

CERTIFIED MATERIAL REPORT

Alloy	Diameter	Package	Lot Number
R5183	.125	TIG Rod Box	363072

P.O.# - 86207

PSI QC CW

Chemical Composition limits

Element	Minimum %	Maximum %
Si	---	0.40
Fe	---	0.40
Cu	---	0.10
Mn	0.50	1.0
Mg	4.3	5.2
Cr	0.05	0.25
Zn	---	0.25
Ti	---	0.15
Be	---	0.0008
Other Each	---	0.05
Other Total	---	0.15
Aluminum	Remainder	

AlcoTec Wire Company hereby certifies that the material covered by this report has been inspected in accordance with and been found to meet the applicable requirements of specification AWS A5.10-92 and any order requirements listed below.

All Packaging materials are in compliance with CONEG legislation.

Additional Order Requirements:

AlcoTec

A Partnership of Alcoa Weld Wire Company, Inc.
and Aluminum Technology Corporation

AlcoTec Wire Company
2750 Aero Park Drive
Traverse City, MI 49686 USA
(616) 941-4111 Phone
(616) 941-9154 Fax
alcotec@traverse.com E-mail

3/32

04/23/97

CERTIFIED MATERIAL REPORT

Alloy	Diameter	Package	Lot Number
R5183	.094	TIG Rod Box	363348

P.O.# - 105019

PSI QC CW

Tony Took 1 box of 10. to T II samples ab. 4/29/97

Chemical Composition limits

Element	Minimum %	Maximum %
Si	---	0.40
Fe	---	0.40
Cu	---	0.10
Mn	0.50	1.0
Mg	4.3	5.2
Cr	0.05	0.25
Zn	---	0.25
Ti	---	0.15
Be	---	0.0008
~~Other Each~~	~~---~~	~~0.05~~
Other Total	---	0.15
Aluminum	Remainder	

AlcoTec Wire Company hereby certifies that the material covered by this report has been inspected in accordance with and been found to meet the applicable requirements of specification AWS A5.10-92 and any order requirements listed below.

All Packaging materials are in compliance with CONEG legislation.

Additional Order Requirements:

V.P. - Quality Control

18

HARRIS
SOLDERING · BRAZING · WELDING · MODELERS

J. W. HARRIS CO., INC. | 10930 DEERFIELD ROAD | CINCINNATI, OHIO 45242

J. W. Harris Co
Certificate of Con

Sold To:
AIRCO NEW ENGLAND
90 RESEARCH ROAD
HINGHAM, MA 02043

P.O. No. PO#

Shipped To: Process Systems
PO 70015R

Date

Date Shipped

Order No.

Item	Weight	Size	Alloy	Heat No.
1.	100 LBS	1/16 x 36	Alum	0294
2.				
3.				

PSI QC CW

Comments:

BOC GASES
90 RESEARCH ROAD
HINGHAM, MA 02043

Alloy	AWS A5.10-80 / ASME SFA5.10		DO-R-5660 Class	Si	Fe	Cu	Mn	Mg	Cr	Zn	Ti	Percen Other Elen Each
1100 Aluminum (B)	ER1100	R1100	1100	A	A	0.05-0.20	0.05					0.05
2319 Aluminum (C)	ER2319	R2319	2319	0.20	0.30	5.8-6.8	0.2-0.40	0.02				0.05
4043 Aluminum	ER4043	R4043	4043	4.5-5.0	0.8	0.30	0.05	0.05		0.10	0.10-0.20	0.05
718 Aluminum	ER4047	R4047	4047	11.0-13.0	0.8	0.30	0.15	0.10		0.20	0.20	0.05
5183 Aluminum	ER5183	R5183	5183	.40	0.40	0.10	0.50-1.0	4.3-5.2	0.05-0.25			0.05
5356 Aluminum	ER5356	R5356	5356	0.25	0.40	0.10		4.5-5.5	0.05-0.25			0.05
5554 Aluminum	ER5554	R5554	5554		0.40	0.10			0.05-0.20			0.05
5556	ER5556	R5556	5556		0.40	0.1			0.05-0			
5654	ER5654	R5654	5654		0	0.1			0.1			

NOTES:

1. Single values shown are maximum percentages unless otherwise noted.
2. Beryllium shall not exceed 0.0008 percent.
A. Silicon plus iron shall not exceed 0.95 percent.
B. Aluminum content is the difference between 100.00 percent and the sum of all metallic elements in the material having an assigned value of 0.010 percent or more each, expressed to the second decimal before determining the sum.
C. Vanadium content shall be 0.05-0.15 percent. Zirconium content shall be 0.10-0.25 percent.
D. Silicon plus iron shall not exceed 0.45 percent.

We certify that the items and/or materials listed above are in accordanc
applicable purchase specifications having passed our ... ections as n

FROM :5177490155 TO ... 05/03 P.02/02

SANDVIK Steel

We make Quality happen . . .

MATERIAL CERTIFICA

SANDVIK STEEL COMPANY

P.O. BOX 1220, SCRANTON, PA. 18501 PH. (717) 587-5191

PLANT LOCATION: INTERSTATE 81, WAVERLY EXIT 59

SOLD TO: BOC GASES (AIRCO)
LISLE IL

SHIP TO: AIRCO-NEW ENGLAND
HINGHAM MA

CUSTOMER PURCHASE ORDER NO.: 43594

SANDVIK ORDER NO.: 94386

CERTIFICATE DATE: 10/18/96

WORK ORDER / LOT NO.: 969410

QUANTITY: PER PACKING NOTE

TAG:

AWS A-5.9

STAINLESS STEEL WELDING WIRE TYPE ER 308L

DIAMETER: .045"

Filler Metal Analysis, %

Heat	C	Si	Mn	P	S	Cr	Ni
S710840	.015	.430	1.800	.016	.013	20.01	9.78

PSI QC CW

Mo	Cb/Nb	Ta	Ti	Cu	Cb/Nb+Ta	N
.050			.002	.050	.040	.050

1-12-97

The material has not come in contact with mercury or mercury-containing compounds.

"Material not touched by hand after final production process cleaning."

Material has been manufactured in accordance with Sandvik Steel Company Quality Manual Revision 10 dated October 1, 1995. Quality system approved to ISO-9002/ANSI/ASQC Q9002-1994.

PROCESS SYSTEMS
180 LBS
PO 70012R

Bengt H. Berg, Director, Quality and Metallurgy
Daniel Damiani, Quality Engineer

(6119)(10)

BOC GASES
90 RESEARCH ROAD
HINGHAM, MA 02043

(2)

SANDVIK Steel

We make Quality happen ...

MATERIAL CERTIFIC

SANDVIK STEEL COMPANY
P.O. BOX 1220, SCRANTON, PA. 18501 PH. (717) 587-5191
PLANT LOCATION: INTERSTATE 81, WAVERLY EXIT 59

SOLD TO: BOC GASES (AIRCO)
LISLE IL

SHIP TO: PROCESS SYSTEMS INTL
WESTBORO MA

CUSTOMER PURCHASE ORDER NO.: 41276

CERTIFICATE DATE: 8/26/96

SANDVIK ORDER NO.: 88712

QUANTITY: PER PACKING NOTE

WORK ORDER / LOT NO.: 967451

TAG:

AWS A-5.9

STAINLESS STEEL WELDING WIRE TYPE ER 308L

DIAMETER: 3/32"

Filler Metal Analysis, %

Heat	C	Si	Mn	P	S	Cr	Ni
S710840	.015	.430	1.800	.016	.013	20.01	9.78

PSI QC Cw 10-7-96

Mo	Cb/Nb	Ta	Ti	Cu	Cb/Nb+Ta	N
.050			.002	.050	.040	.050

The material has not come in contact with mercury or mercury-containing compounds.

"Material not touched by hand after final production process cleaning."

Material has been manufactured in accordance with Sandvik Steel Company Quality Manual Revision 10 dated October 1, 1995. Quality system approved to ISO-9002/ANSI/ASQC Q9002-1994.

Bengt H. Berg, Director, Quality and Metallurgy

15(66119)(10)

(21)

SANDVIK Steel

We make Quality happen...

MATERIAL CERTIFICA

SANDVIK STEEL COMPANY
P.O. BOX 1220, SCRANTON, PA. 18501 PH. (717) 587-5191
PLANT LOCATION: INTERSTATE 81, WAVERLY EXIT 59

SOLD TO: BOC GASES

SHIP TO: PROCESS SYSTEMS
WESTBORO MA 01581

CUSTOMER PURCHASE ORDER NO.: 700603R//V59049045000

CERTIFICATE DATE: 6/18/96

SANDVIK ORDER NO.: TK # 591854

QUANTITY: 60 LBS 308L x 36

WORK ORDER / LOT NO.: 965227

TAG:

AWS A-5.9

STAINLESS STEEL WELDING WIRE TYPE ER 308L

DIAMETER: 3/32"

Filler Metal Analysis, %

Heat	C	Si	Mn	P	S	Cr	Ni
S709276	.019	.430	1.800	.018	.012	19.92	9.82

	Mo	Cb/Nb	Ta	Ti	Cu	Cb/Nb+Ta	N
PSI QC CW	.080			.002	.130	.030	.045

The material has not come in contact with mercury or mercury-containing compounds.

"Material not touched by hand after final production process cleaning."

Material has been manufactured in accordance with Sandvik Steel Company Quality Manual Revision 10 dated October 1, 1995. Quality system approved to ISO-9002/ANSI/ASQC Q9002-1994.

Bengt H. Berg, Director, Quality and Metallurgy C

15(66119)(10)

2

SANDVIK Steel

We make Quality happen...

MATERIAL CERTIFICA

SANDVIK STEEL COMPANY
P.O. BOX 1220, SCRANTON, PA. 18501 PH. (717) 587-5191
PLANT LOCATION: INTERSTATE 81, WAVERLY EXIT 59

BOC GASES

SOLD TO: 90 RESEARCH ROAD
HINGHAM, MA 02043

SHIP TO: PROCESS SYSTEMS INTL
WESTBORO MA 01581

CUSTOMER PURCHASE ORDER NO.: 700603r/V59049045000
TK 591854-02

CERTIFICATE DATE: 6/17/96

SANDVIK ORDER NO.:

QUANTITY: 120 LBS er308L 1/16 x 36

WORK ORDER / LOT NO.: 965225

TAG:

AWS A-5.9

STAINLESS STEEL WELDING WIRE TYPE ER 308L

DIAMETER: 1/16"

Filler Metal Analysis, %

Heat	C	Si	Mn	P	S	Cr	Ni
S708727	.014	.390	1.800	.016	.012	20.20	9.87

	Mo	Cb/Nb	Ta	Ti	Cu	Cb/Nb+Ta	N
	.050			.003	.040	.030	.060

PSI QC CW

The material has not come in contact with mercury or mercury-containing compounds.

"Material not touched by hand after final production process cleaning."

Material has been manufactured in accordance with Sandvik Steel Company Quality Manual Revision 10 dated October 1, 1995. Quality system approved to ISO-9002/ANSI/ASQC Q9002-1994.

Bengt H. Berg, Director, Quality and Metallurgy

15(66119)(10)

23

SANDVIK Steel

We make Quality happen . . .

MATERIAL CERT...

SANDVIK STEEL COMPANY

P.O. BOX 1220, SCRANTON, PA. 18501 PH. (717) 587-5191
PLANT LOCATION: INTERSTATE 81, WAVERLY EXIT 59

SOLD TO: BOC GASES (AIRCO)
LISLE IL

SHIP TO: AIRCO-NEW ENGLAND
process systems intl HINGHAM MA
westboro, Ma.

CUSTOMER PURCHASE ORDER NO.: 42100

CERTIFICATE DATE: 9/27/96

SANDVIK ORDER NO.: 90814

PO-700627-V59049-041

QUANTITY: PER PACKING NOTE

WORK ORDER / LOT NO.: 968845

TAG:

AWS A-5.9

STAINLESS STEEL WELDING WIRE TYPE ER 308L

DIAMETER: .045"

Filler Metal Analysis, %

Heat	C	Si	Mn	P	S	Cr	Ni
S437864	.013	.430	1.720	.020	.013	19.88	9.98

PSI QC CW

Mo	Cb/Nb	Ta	Ti	Cu	Cb/Nb+Ta	N
.250	.010		.005	.150		.055

The material has not come in contact with mercury or mercury-containing compounds.

"Material not touched by hand after final production process cleaning."

Material has been manufactured in accordance with Sandvik Steel Company Quality Manual Revision 10 dated October 1, 1995. Quality system approved to ISO-9002/ANSI/ASQC Q9002-1994.

Bengt H. Berg, Director, Quality and Metallurgy
Daniel Damiani, Quality Engineer

15(66119)(10)

BOC G...
90 RESEARCH R...
HINGHAM, MA 02043

(24)

SANDVIK Steel

We make Quality happen . . .

MATERIAL CERTIFICA

SANDVIK STEEL COMPANY

P.O. BOX 1220, SCRANTON, PA. 18501 PH. (717) 587-5191
PLANT LOCATION: INTERSTATE 81, WAVERLY EXIT 59

OLD TO: BOC GASES (AIRCO)
LISLE IL

SHIP TO: AIRCO-NEW ENGLAND
HINGHAM MA

CUSTOMER PURCHASE ORDER NO.: 42100

CERTIFICATE DATE: 9/04/96

SANDVIK ORDER NO.: 90816

QUANTITY: PER PACKING NOTE

WORK ORDER / LOT NO.: 967820

TAG:

AWS A-5.9

STAINLESS STEEL WELDING WIRE TYPE ER 308L

DIAMETER: 1/8"

Filler Metal Analysis, %

Heat	C	Si	Mn	P	S	Cr	Ni
S710840	.015	.430	1.800	.016	.013	20.01	9.78
PSI QC CW	Mo	Cb/Nb	Ta	Ti	Cu	Cb/Nb+Ta	N
	.050			.002	.050	.040	.050

The material has not come in contact with mercury or mercury-containing compounds.

"Material not touched by hand after final production process cleaning."

Material has been manufactured in accordance with Sandvik Steel Company Quality Manual Revision 10 dated October 1, 1995. Quality system approved to ISO-9002/ANSI/ASQC Q9002-1994.

PROCESS SYSTEMS
700627-R/V59049-044
TK 693421

Bengt H. Berg, Director, Quality and Metallurgy

240 LB

15(66119)(10)

BOC GASES
90 RESEARCH ROAD
HINGHAM, MA 02043

(2)

SANDVIK Steel

We make Quality happen...

MATERIAL CERTIFICA

SANDVIK STEEL COMPANY
P.O. BOX 1220, SCRANTON, PA. 18501 PH. (717) 587-5191
PLANT LOCATION: INTERSTATE 81, WAVERLY EXIT 59

OLD TO: BOC GASES (AIRCO)
LISLE IL

SHIP TO: AIRCO-NEW ENGLAND
HINGHAM MA

USTOMER PURCHASE ORDER NO.: 42100

CERTIFICATE DATE: 9/04/96

ANDVIK ORDER NO.: 90816

QUANTITY: PER PACKING NOTE

'ORK ORDER / LOT NO.: 967818

TAG:

AWS A-5.9

STAINLESS STEEL WELDING WIRE TYPE ER 308L

DIAMETER: 1/16"

Filler Metal Analysis, %

Heat	C	Si	Mn	P	S	Cr	Ni
S710840	.015	.430	1.800	.016	.013	20.01	9.78
	Mo	Cb/Nb	Ta	Ti	Cu	Cb/Nb+Ta	N
	.050			.002	.050	.040	.050

PSI QC CW

The material has not come in contact with mercury or mercury-containing compounds.

"Material not touched by hand after final production process cleaning."

Material has been manufactured in accordance with Sandvik Steel Company Quality Manual Revision 10 dated October 1, 1995. Quality system approved to ISO-9002/ANSI/ASQC Q9002-1994.

PROCESS SYSTEMS
700627-R/V59049-042
TK 693415
50 LB.

Bengt H. Berg, Director, Quality and Metallurgy

(66119)(10)

BOC GA[illegible]
[illegible] ROAD
[illegible] A 02043

(26)

SANDVIK Steel

We make Quality happen ...

MATERIAL CERTIFICAT

SANDVIK STEEL COMPANY

P.O. BOX 1220, SCRANTON, PA. 18501 PH. (717) 587-5191

PLANT LOCATION: INTERSTATE 81, WAVERLY EXIT 59

SOLD TO: BOC GASES (AIRCO)
LISLE IL

SHIP TO: process systems

CUSTOMER PURCHASE ORDER NO.: 693415

CERTIFICATE DATE: 10/03/96

SANDVIK ORDER NO.:

QUANTITY: 60 lbs

WORK ORDER / LOT NO.: 700627-r/v59049-042

TAG:

AWS A-5.9

STAINLESS STEEL WELDING WIRE TYPE ER 308L

DIAMETER: 1/16"

Filler Metal Analysis, %

Heat	C	Si	Mn	P	S	Cr	Ni
S437864	.013	.430	1.720	.020	.013	19.88	9.98

	Mo	Cb/Nb	Ta	Ti	Cu	Cb/Nb+Ta	N
PSI QC CW	.250	.010		.005	.150		.055

The material has not come in contact with mercury or mercury-containing compounds.

"Material not touched by hand after final production process cleaning."

Material has been manufactured in accordance with Sandvik Steel Company Quality Manual Revision 10 dated October 1, 1995. Quality system approved to ISO-9002/ANSI/ASQC Q9002-1994.

Bengt H. Berg, Director, Quality and Metallurgy
Daniel Damiani, Quality Engineer

45(661(9)(10)

BOC GASES
RESEARCH RO
HINGHAM, MA 0204

(2)

SANDVIK Steel

We make Quality happen . . .

MATERIAL CERTIFICA

SANDVIK STEEL COMPANY

P.O. BOX 1220, SCRANTON, PA. 18501 PH. (717) 587-5191

PLANT LOCATION: INTERSTATE 81, WAVERLY EXIT 59

OLD TO: BOC GASES (AIRCO)
LISLE IL

SHIP TO: AIRCO-NEW ENGLAND
HINGHAM MA

CUSTOMER PURCHASE ORDER NO.: 42100

CERTIFICATE DATE: 9/03/96

SANDVIK ORDER NO.: 90815

QUANTITY: PER PACKING NOTE

WORK ORDER / LOT NO.: 967819

TAG:

AWS A-5.9

STAINLESS STEEL WELDING WIRE TYPE ER 308L

DIAMETER: 3/32"

Filler Metal Analysis, %

Heat	C	Si	Mn	P	S	Cr	Ni
S437864	.013	.430	1.720	.020	.013	19.88	9.98

PSI QC CW

Mo	Cb/Nb	Ta	Ti	Cu	Cb/Nb+Ta	N
.250	.010		.005	.150		.055

The material has not come in contact with mercury or mercury-containing compounds.

"Material not touched by hand after final production process cleaning."

Material has been manufactured in accordance with Sandvik Steel Company Quality Manual Revision 10 dated October 1, 1995. Quality system approved to ISO-9002/ANSI/ASQC Q9002-1994.

PROCESS SYSTEMS
700627-R/V59049-0
TK 693420
240 LB.

Bengt H. Berg, Director, Quality and Metallurgy

15(66119)(10)

BOC GASES
50 RESEARCH ROAD
HINGHAM, MA 02043

28

AlcoTec

A Partnership of Alcoa Weld Wire Company, Inc.
and Aluminum Technology Corporation

AlcoTec Wire Company
2750 Aero Park Drive
Traverse City, MI 49686 USA
(616) 941-4111 Phone
(616) 941-9154 Fax

05/07/96

CERTIFIED MATERIAL REPORT

Alloy	Diameter	Package	Lot Number
R5183	.125	TIG Rod Box	362769

P.O.# - 72454

PSI
QC
CW

Chemical Composition limits

Element	Minimum %	Maximum %
Si	---	0.40
Fe	---	0.40
Cu	---	0.10
Mn	0.50	1.0
Mg	4.3	5.2
Cr	0.05	0.25
Zn	---	0.25
Ti	---	0.15
Be	---	0.0008
Other Each	---	0.05
Other Total	---	0.15
Aluminum	Remainder	

AlcoTec Wire Company hereby certifies that the material covered by this report has been inspected in accordance with and been found to meet the applicable requirements of specification AWS A5.10-92 and any order requirements listed below.

All Packaging materials are in compliance with CONEG legislation.

Additional Order Requirements:

Control

Certifying Signature

29

HARRIS
SOLDERING, BRAZING & WELDING PRODUCTS

J. W. HARRIS CO., INC. | 10930 DEERFIELD ROAD | CINCINNATI, OHIO 45242

J. W. Harris Comp
Certificate of Compl

Sold To:
AIRCO NEW ENGLAND
90 RESEARCH ROAD
HINGHAM, MA 02043

Shipped To: PROCESS SYSTEMS INTL
WESTBORO MA.

Date 10-17-96
Date Shipped 10-18-96
Order No. 712222

P.O. No. PO#

Item	Weight	Size	Alloy	Heat No.
1.	9LB	5/32 X 36	ALUM	AA1005183D
2.	10LB	5/32 X 36	ALUM	7295
3.				

PS
QC
CW

Comments:
P.O. 700643-R/V5904904300

Alloy	AWS A5.10-88 ASME SFA5.10		QQ-R-566B Class	Si	Fe	Cu	Mn	Mg	Cr	Zn	Ti	Percent Other Element Each	Ti
1100 Aluminum (B)	ER1100	R1100	1100	A	A	0.05-0.20	0.05			0.10		0.05	
2319 Aluminum (C)	ER2319	R2319	2319	0.20	0.30	5.8-6.8	0.20-0.40	0.02		0.10	0.10-0.20	0.05	
4043 Aluminum	ER4043	R4043	4043	4.5-6.0	0.8	0.30	0.05	0.05		0.10	0.20	0.05	
718 Aluminum	ER4047	R4047	4047	11.0-13.0	0.8	0.30	0.15	0.10		0.20		0.05	
5183 Aluminum	ER5183	R5183	5183	.40	0.40	0.10	0.50-1.0	4.3-5.2	0.05-0.25	0.25	0.15	0.05	
5356 Aluminum	ER5356	R5356	5356	0.25	0.40	0.10	0.05-0.20	4.5-5.5	0.05-0.20	0.10	0.06-0.20	0.05	
5554 Aluminum	ER5554	R5554	5554	0.25	0.40	0.10	0.50-1.0	2.4-3.0	0.05-0.20	0.25	0.05-0.20	0.05	
5556 Aluminum	ER5556	R5556	5556	0.25	0.40	0.10	0.50-1.0	4.7-5.5	0.05-0.20	0.25	0.05-0.20	0.05	
5654 Aluminum	ER5654	R5654	5654	D	D	0.05	0.01	3.1-3.9	0.15-0.35	0.20	0.05-0.15	0.05	

NOTES:
1. Single values shown are maximum percentages, except where a minimum is specified.
2. Beryllium shall not exceed 0.0008 percent, all alloys.
A. Silicon plus iron shall not exceed 0.95 percent.
B. The aluminum content is the difference between 100.00 percent and the sum of all other metallic elements present in amounts of 0.010 percent or more each, expressed to the second decimal before determining the sum, and shall not be less than 99.0.
C. Vanadium content shall be 0.05-0.15 percent. Zirconium content shall be 0.10-0.25 percent.
D. Silicon plus iron shall not exceed 0.45 percent.

BOC GA
90 RESEARCH
HINGHAM, MA 02043

30

We certify that

HARRIS
SOLDERING BRAZING & WELDING PRODUCTS

J. W. HARRIS CO., INC. | 10930 DEERFIELD ROAD | CINCINNATI, OHIO 45242

J. W. Harris Comp
Certificate of Compl

Sold To:
AIRCO NEW ENGLAND
90 RESEARCH ROAD
HINGHAM, MA 02043

Shipped To: PROCESS SYSTEMS INTL

Date _____

Date Shipped 10-25-96

P.O. No. PO#

PO 700643R/V6904.9043000

Order No. 7139604

Item	Weight	Size	Alloy	Heat No.
1.	50LB	5/32	ALUM	0233
2.				
3.				

PSI
QC
CW

Comments:

BOC
90 RESEARCH
HINGHAM, MA 02043

Alloy	AWS A5.10-00 ASME SFA5.10		QQ-R-566B Class	Si	Fe	Cu	Mn	Mg	Cr	Zn	Ti	Percent Other Element Each	Ti
1100 Aluminum (B)	ER1100	R1100	1100	A	A	0.05-0.20	0.05			0.10		0.05	
2319 Aluminum (C)	ER2319	R2319	2319	0.20	0.30	5.8-6.8	0.20-0.40	0.02		0.10	0.10-0.20	0.05	
4043 Aluminum	ER4043	R4043	4043	4.5-6.0	0.8	0.30	0.05	0.05		0.10	0.20	0.05	
718 Aluminum	ER4047	R4047	4047	11.0-13.0	0.8	0.30	0.15	0.10		0.20		0.05	
5183 Aluminum	ER5183	R5183	5183	.40	0.40	0.10	0.50-1.0	4.3-5.2	0.05-0.25	0.25	0.15	0.05	
5356 Aluminum	ER5356	R5356	5356	0.25	0.40	0.10	0.05-0.20	4.5-5.5	0.05-0.20	0.10	0.06-0.20	0.05	
5554 Aluminum	ER5554	R5554	5554	0.25	0.40	0.10	0.50-1.0	2.4-3.0	0.05-0.20	0.25	0.05-0.20	0.05	
5556 Aluminum	ER5556	R5556	5556	0.25	0.40	0.10	0.50-1.0	4.7-5.5	0.05-0.20	0.25	0.05-0.20	0.05	
5654 Aluminum	ER5654	R5654	5654	D	D	0.05	0.01	3.1-3.9	0.15-0.35	0.20	0.05-0.15	0.05	

NOTES:

1. Single values shown are maximum percentages, except where a minimum is specified.
2. Beryllium shall not exceed 0.0008 percent, all alloys.
A. Silicon plus iron shall not exceed 0.95 percent.
D. The aluminum content is the difference between 100.00 percent and the sum of all other metallic elements present in amounts of 0.010 percent or more each, expressed to the second decimal before determing the sum, and shall not be less than 99.0.
C. Vanadium content shall be 0.05-0.15 percent. Zirconium content shall be 0.10-0.25 percent.
D. Silicon plus iron shall not exceed 0.45 percent.

FROM :AIRCO/BOC GASES HINGHM TO 5083705930 1995,10-31 04:01 #925 P.02/02

J. W. HARRIS CO., INC. | 10930 DEERFIELD ROAD | CINCINNATI, OHIO 45242

J..W. Harris Co
Certificate of Con

Sold To:
AIRCO NEW ENGLAND
90 RESEARCH ROAD
HINGHAM, MA 02043

Shipped To: PROCESS SYSTEMS
700643-R/V5904904300

Date 10-31-96

Date Shipped

P.O. No. PO#

Order No. 712225

Item	Weight	Size	Alloy	Heat No.
1.	50	5/32	ALUM	96248
2.				
3.				

PSI
QC
CW

Comments:

Alloy	AWS A.510-00 ASME SFA5.10		QQ-R-566B Class	Si	Fe	Cu	Mn	Mg	Cr	Zn	Ti	Percer Other Ele Each
1100 Aluminum (B)	ER1100	R1100	1100	A	A	0.05-0.20	0.05			0.10		0.05
2319 Aluminum (C)	ER2319	R2319	2319	0.20	0.30	5.8-6.8	0.20-0.40	0.02		0.10	0.10-0.20	0.05
4043 Aluminum	ER4043	R4043	4043	4.5-6.0	0.8	0.30	0.05	0.05		0.10	0.20	0.05
710 Aluminum	ER4047	R4047	4047	11.0-13.0	0.8	0.30	0.15	0.10		0.20		0.05
5183 Aluminum	ER5183	R5183	5183	.40	0.40	0.10	0.50-1.0	4.3-5.2	0.05-0.25	0.25	0.15	0.05
5356 Aluminum	ER5356	R5356	5356	0.25	0.40	0.10	0.05-0.20	4.5-5.5	0.05-0.20	0.10	0.06-0.20	0.05
5554 Aluminum	ER5554	R5554	5554	.0.25	0.40	0.10	0.50-1.0	2.4-3.0	0.05-0.20	0.25	0.05-0.20	0.05
5556 Aluminum	ER5556	R5556	5556	0.25	0.40	0.10	0.50-1.0	4.7-5.5	0.05-0.20	0.25	0.05-0.20	0.05
5654 Aluminum	ER5654	R5654	5654	D	D	0.05	0.01	3.1-3.9	0.15-0.35	0.20	0.05-0.15	0.05

NOTES:

1. Single values shown are maximum percentages, except where a minimum is specified.
2. Beryllium shall not exceed 0.0008 percent, all alloys.
A. Silicon plus iron shall not exceed 0.95 percent.
B. the aluminum content is the difference between 100.00 percent and the sum of all other metallic elements present in amounts of 0.010 percent or more each, expressed to the second decimal before determing the sum, and shall not be less than 99.0.
C. Vanadium content shall be 0.05-0.15 percent. Zirconium content shall be 0.10-0.25 percent.
D. Silicon plus iron shall not exceed 0.45 percent.

We certify that the items and/or materials lised above are in accord
applicable purchas

AlcoTec

A Partnership of Alcoa Weld Wire Company, Inc.
and Aluminum Technology Corporation

AlcoTec Wire Company
2750 Aero Park Drive
Traverse City, MI 49686 USA
(616) 941-4111 Phone
(616) 941-9154 Fax
alcotec@traverse.com E-mail

11/13/96

CERTIFIED MATERIAL REPORT

Alloy	Diameter	Package	Lot Number
R5183	.156	TIG Rod Box	362884

P.O.# - 86330

Chemical Composition limits

Element	Minimum %	Maximum %
Si	---	0.40
Fe	---	0.40
Cu	---	0.10
Mn	0.50	1.0
Mg	4.3	5.2
Cr	0.05	0.25
Zn	---	0.25
Ti	---	0.15
Be	---	0.0008
Other Each	---	0.05
Other Total	---	0.15
Aluminum	Remainder	

PSI @C CW

AlcoTec Wire Company hereby certifies that the material covered by this report has been inspected in accordance with and been found to meet the applicable requirements of specification AWS A5.10-92 and any order

All Packaging materials are in compliance with CONEG legislation.

Additional Order Requirements:

V.P. - Quality Control

AlcoTec

A Partnership of Alcoa Weld Wire Company, Inc.
and Aluminum Technology Corporation

AlcoTec Wire Company
2750 Aero Park Drive
Traverse City, MI 49686 USA
(616) 941-4111 Phone
(616) 941-9154 Fax
alcotec@traverse.com E-mail

11/11/96

CERTIFIED MATERIAL REPORT

Alloy	Diameter	Package	Lot Number
R5183	.156	TIG Rod Box	362884

P.O.# - 86330

Chemical Composition limits

Element	Minimum %	Maximum %
Si	---	0.40
Fe	---	0.40
Cu	---	0.10
Mn	0.50	1.0
Mg	4.3	5.2
Cr	0.05	0.25
Zn	---	0.25
Ti	---	0.15
Be	---	0.0008
Other Each	---	0.05
Other Total	---	0.15
Aluminum	Remainder	

PSI
QC
CW

AlcoTec Wire Company hereby certifies that the material covered by this report has been inspected in accordance with and been found to meet the applicable requirements of specification AWS A5.10-92 and any order requirements listed below.

All Packaging materials are in compliance with CONEG legislation.

Additional Order Requirements:

V.P. - Quality Control

SANDVIK Steel

We make Quality happen...

MATERIAL CERTIFICA

SANDVIK STEEL COMPANY
P.O. BOX 1220, SCRANTON, PA. 18501 PH. (717) 587-5191
PLANT LOCATION: INTERSTATE 81, WAVERLY EXIT 59

SOLD TO: BOC GASES (AIRCO)
LISLE IL

SHIP TO: PROCESS SYSTEMS

CUSTOMER PURCHASE ORDER NO.: 700650-R/VS904904500

CERTIFICATE DATE: 9/04/96

SANDVIK ORDER NO.: 90816

QUANTITY: 60 LB

WORK ORDER/LOT NO.:

TAG:

AWS A-5.9

STAINLESS STEEL WELDING WIRE TYPE ER 308L

PSI QC CW

DIAMETER: 1/8"

Filler Metal Analysis, %

Heat	C	Si	Mn	P	S	Cr	Ni
S710840	.015	.430	1.800	.016	.013	20.01	9.78

	Mo	Cb/Nb	Ta	Ti	Cu	Cb/Nb+Ta	N
	.050	—		.002	.050	.040	.050

The material has not come in contact with mercury or mercury-containing compounds.

"Material not touched by hand after final production process cleaning."

Material has been manufactured in accordance with Sandvik Steel Company Quality Manual Revision 10 dated October 1, 1995. Quality system approved to ISO-9002/ANSI/ASQC Q9002-1994.

Bengt H. Berg, Director, Quality and Metallurgy

15(66119)(10)

BOC GASES
RESEARCH D
HINGHAM, MA 02043

(35)

SANDVIK Steel

We make Quality happen ...

MATERIAL CERTIFICAT

SANDVIK STEEL COMPANY
P.O. BOX 1220, SCRANTON, PA. 18501, PH. (717) 587-5191
PLANT LOCATION: INTERSTATE 81, WAVERLY EXIT 59

SOLD TO: BOC GASES (AIRCO)
LISLE IL

SHIP TO: PROCESS SYSTEM

CUSTOMER PURCHASE ORDER NO.: 700650-R/V5904904500

CERTIFICATE DATE: 10/04/96

SANDVIK ORDER NO.: 92899

QUANTITY: 184B

WORK ORDER / LOT NO.:

TAG:

AWS A-5.9

PSI QC CW

STAINLESS STEEL WELDING WIRE TYPE ER 308L

DIAMETER: 1/8"

Filler Metal Analysis, %

Heat	C	Si	Mn	P	S	Cr	Ni
S437864	.013	.430	1.720	.020	.013	19.88	9.98

	Mo	Cb/Nb	Ta	Ti	Cu	Cb/Nb+Ta	N
	.250	.010		.005	.150		.055

The material has not come in contact with mercury or mercury-containing compounds.

"Material not touched by hand after final production process cleaning."

Material has been manufactured in accordance with Sandvik Steel Company Quality Manual Revision 10 dated October 1, 1995. Quality system approved to ISO-9002/ANSI/ASQC Q9002-1994.

Bengt H. Berg, Director, Quality and Metallurgy
Daniel Damiani, Quality Engineer

15(66119)(10)

BOC GASES
RESEARCH ROAD
INGHAM, MA 02043

HARRIS
SOLDERING, BRAZING & WELDING PRODUCTS

J. W. HARRIS CO., INC. | 10930 DEERFIELD ROAD | CINCINNATI, OHIO 45242

J. W. Harris Comp
Certificate of Comp

Date _____

Sold To: AIRCO NEW ENGLAND
90 RESEARCH ROAD
HINGHAM, MA 02043

P.O. No. PO#

Shipped To: Process Systems Int'L
60 70015R/7741000

Date Shipped 3-28-97

Order No. 797282

Item	Weight	Size	Alloy	Heat No.
1.	40 LB	1/16 x 36	Alum	0268
2.				
3.				

PSI QC CVI

Comments:

BOC GASES
90 RESEARCH ROAD
HINGHAM, MA 02043

Alloy	AWS A5.10-88 / ASME SFA5.10		QQ-R-566B Class	Si	Fe	Cu	Mn	Mg	Cr	Zn	Ti	Percent Other Elements Each
1100 Aluminum (B)	ER1100	R1100	1100	A	A	0.05-0.20	0.05			0.10		0.05
2319 Aluminum (C)	ER2319	R2319	2319	0.20	0.30	5.8-6.8	0.20-0.40	0.02		0.10	0.10-0.20	0.05
4043 Aluminum	ER4043	R4043	4043	4.5-6.0	0.8	0.30	0.05	0.05		0.10	0.20	0.05
718 Aluminum	ER4047	R4047	4047	11.0-13.0	0.8	0.30	0.15	0.10		0.20		0.05
5183 Aluminum	ER5183	R5183	5183	.40	0.40	0.10	0.50-1.0	4.3-5.2	0.05-0.25	0.25	0.15	0.05
5356 Aluminum	ER5356	R5356	5356	0.25	0.40	0.10	0.05-0.20	4.5-5.5	0.05-0.20	0.10	0.06-0.20	0.05
5554 Aluminum	ER5554	R5554	5554	0.25	0.40	0.10	0.50-1.0	2.4-3.0	0.05-0.20	0.25	0.05-0.20	0.05
5556 Aluminum	ER5556	R5556	5556	0.25	0.40	0.10	0.50-1.0	4.7-5.5	0.05-0.20	0.25	0.05-0.20	0.05
5654 Aluminum	ER5654	R5654	5654	D	D	0.05	0.01	3.1-3.9	0.15-0.35	0.20	0.05-0.15	0.05

NOTES:

1. Single values shown are maximum percentages, except where a minimum is specified.
2. Beryllium shall not exceed 0.0000 percent, all alloys.
A. Silicon plus iron shall not exceed 0.95 percent.
D. The aluminum content is the difference between 100.00 percent and the sum of all other metallic elements present in amounts of 0.010 percent or more each, expressed to the second decimal before determing the sum, and shall not be less than 99.0.
C. Vanadium content shall be 0.05-0.15 percent. Zirconium content shall be 0.10-0.25 percent.
D. Silicon plus iron shall not exceed 0.45 percent.

We certify that the items and/or materials lised above are in accordance
applicable purchase specifications having passed our ections as not

HARRIS-WELCO | 1051 YORK ROAD P.O. BOX 69 | KINGS MOUNTAIN, NC 28086

SOLDERING, BRAZING & WELDING PRODUCTS

CERTIFICATE OF COMPLIANCE

RKL ISSUE DATE: 04-15-96

PROCESS SYSTEMS
PO 700/SR/774/1000
10 LBS 4043 1/16X36

HEAT NUMBER/LOT NUMBER: 0243

CHEMICAL COMPOSITION LIMITS

PSI
QC
CW

ALLOY: 4043
SPEC : AWS A5.10R/ER4043/AMS 4190D
ASME SFA 5.10/QQ-R-566-B

SILICON	4.500 -	6.000	TITANIUM		.200
COPPER		.300	MAGNESIUM		.050
IRON		.800	ZINC		.100
BERYLLIUM		.0008	REMAINDER		ALUMINUM
OTHER		.15			

SINGLE VALUES ARE MAXIMUM UNLESS OTHERWISE SPECIFIED.

SAFETY SILV, STAY SILV, STAY CLEAN, STAY BRITE & BRIDGIT ARE REGISTERED TRADEMARKS OF J.W. HARRIS CO., INC

WE CERTIFY THAT THE ITEMS AND/OR MATERIALS LISTED ABOVE ARE IN ACCORDANCE WITH ALL APPLICABLE PURCHASE SPECIFICATIONS HAVING PASSED OUR INSPECTIONS AS NOTED.

Robin M. Poe
CERTIFICATION CLERK

BOC GASES
90 RESEARCH ROAD
HINGHAM, MA 02043

(35)

SANDVIK Steel

We make Quality happen

MATERIAL CERTIFICAT

SANDVIK STEEL COMPANY
P.O. BOX 1220, SCRANTON, PA. 18501 PH. (717) 587-5191
PLANT LOCATION: INTERSTATE 81, WAVERLY EXIT 59

SOLD TO: PROCESS SYSTEMS

SHIP TO: AIRCO-NEW ENGLAND
HINGHAM MA

CUSTOMER PURCHASE ORDER NO.: 7005R/774101500

CERTIFICATE DATE: 3/20/97

SANDVIK ORDER NO.:

QUANTITY: 180 LBS.

WORK ORDER / LOT NO.:

TAG:

AWS A-5.9

STAINLESS STEEL WELDING WIRE TYPE ER 308L

DIAMETER: 1/16"

Filler Metal Analysis, %

Heat	C	Si	Mn	P	S	Cr	Ni
S711375	.007	.400	1.800	.014	.012	20.02	9.85

PSI QC CW

Mo	Cb/Nb	Ta	Ti	Cu	Cb/Nb+Ta	N
.010			.002	.030	.030	.055

The material has not come in contact with mercury or mercury-containing compounds.

"Material not touched by hand after final production process cleaning."

Material has been manufactured in accordance with Sandvik Steel Company Quality Manual Revision 10 dated October 1, 1995. Quality system approved to ISO-9002/ANSI/ASQC Q9002-1994.

Keith M. Hottle, Manager, Quality & Metallurgy
Celeste Brennan, Sr. Quality Engineer

Celeste Brennan/cc

15(66119)(10)

BOC GASES
90 RESEARCH ROAD
HINGHAM, MA 02043

(39)

SANDVIK Steel

We make Quality happen...

MATERIAL CERTIFICA

SANDVIK STEEL COMPANY

P.O. BOX 1220, SCRANTON, PA. 18501 PH. (717) 587-5191

PLANT LOCATION: INTERSTATE 81, WAVERLY EXIT 59

SOLD TO: BOC GASES (AIRCO)
LISLE IL

SHIP TO: AIRCO-NEW ENGLAND
HINGHAM MA

CUSTOMER PURCHASE ORDER NO.: 42100

CERTIFICATE DATE: 9/03/96

PSI QC CW

SANDVIK ORDER NO.: 90816

QUANTITY: PER PACKING NOTE

WORK ORDER / LOT NO.: 967819

TAG:

AWS A-5.9

STAINLESS STEEL WELDING WIRE TYPE ER-308L

DIAMETER: 3/32"

Filler Metal Analysis, %

Heat	C	Si	Mn	P	S	Cr	Ni
S710840 [redacted]	.013	.430	1.720	.020	.013	19.88	9.98

	Mo	Cb/Nb	Ta	Ti	Cu	Cb/Nb+Ta	N
	.250	.010		.005	.150		.055

The material has not come in contact with mercury or mercury-containing compounds.

"Material not touched by hand after final production process cleaning."

Material has been manufactured in accordance with Sandvik Steel Company Quality Manual Revision 10 dated October 1, 1995. Quality system approved to ISO-9002/ANSI/ASQC Q9002-1994.

PROCESS SYSTEMS
J0018R/774101500

Bengt H. Berg, Director, Quality and Metallurgy

15(66119)(10)

BOC GASES
90 RESEARCH ROAD
HINGHAM, MA 02043

40

MATERIAL CERTIFICAT

SANDVIK Steel

We make Quality happen

SANDVIK STEEL COMPANY
P.O. BOX 1220, SCRANTON, PA. 18501 PH. (717) 587-5191
PLANT LOCATION: INTERSTATE 81, WAVERLY EXIT 59

SOLD TO: BOC GASES (AIRCO)
LISLE IL

SHIP TO: AIRCO-NEW ENGLAND
HINGHAM MA

CUSTOMER PURCHASE ORDER NO.: 46682

CERTIFICATE DATE: 4/21/97

SANDVIK ORDER NO.: 12603

QUANTITY: PER PACKING NOTE

WORK ORDER / LOT NO.: 978457

TAG:

AWS A-5.9

STAINLESS STEEL WELDING WIRE TYPE ER 308L

DIAMETER: 3/32"

Filler Metal Analysis, %

Heat	C	Si	Mn	P	S	Cr	Ni
S712976 -60LB	.013	.440	1.800	.015	.015	19.96	9.63

PSI QC CW

	Mo	Cb/Nb	Ta	Ti	Cu	Cb/Nb+Ta	N
4-28-97	.070			.002	.060	.030	.035

PROCESS SYSTEMS
P.O. 700188/77410500
Shipped 4-25-97 ORDER #805966-01

The material has not come in contact with mercury or mercury-containing compounds.

"Material not touched by hand after final production process cleaning."

Material has been manufactured in accordance with Sandvik Steel Company Quality Manual Revision 10 dated October 1, 1995. Quality system approved to ISO-9002/ANSI/ASQC Q9002-1994.

Keith M. Hottle, Manager, Quality & Metallurgy
Celeste Brennan, Sr. Quality Engineer

Celeste Brennan/cp

1S(66119)(10)

BOC GASES
90 RESEARCH ROAD
HINGHAM, MA 02043

(41)

SANDVIK Steel

We make Quality happen ...

MATERIAL CERTIFICA

SANDVIK STEEL COMPANY

P.O. BOX 1220, SCRANTON, PA. 18501 PH. (717) 587-5191

PLANT LOCATION: INTERSTATE 81, WAVERLY EXIT 59

SOLD TO: BOC GASES (AIRCO)
LISLE IL

SHIP TO: PROCESS SYSTEMS INTL
WESTBOTO MA

CUSTOMER PURCHASE ORDER NO.: 47334

CERTIFICATE DATE: 4/29/97

SANDVIK ORDER NO.: 14445

QUANTITY: PER PACKING NOTE

WORK ORDER / LOT NO.: 970470

TAG:

AWS A-5.9

STAINLESS STEEL WELDING WIRE TYPE ER 308L

DIAMETER: .035"

Filler Metal Analysis, %

Heat	C	Si	Mn	P	S	Cr	Ni
S711375	.007	.400	1.800	.014	.012	20.02	9.85

	Mo	Cb/Nb	Ta	Ti	Cu	Cb/Nb+Ta	N
	.010			.002	.030	.030	.055

PSI QC CW

The material has not come in contact with mercury or mercury-containing compounds.

Keith M. Hottle, Manager, Quality & Metallurgy

15(03030, REV.2)(10)

CUSTOMER ORIGINAL

AlcoTec

A Partnership of Alcoa Weld Wire Company, Inc.
and Aluminum Technology Corporation

AlcoTec Wire Company
2750 Aero Park Drive
Traverse City, MI 49686 USA
(616) 941-4111 Phone
(616) 941-8154 Fax
alcotec@traverse.com E-mail

1/6

01/13/97

CERTIFIED MATERIAL REPORT

Alloy	Diameter	Package	Lot Number
R5183	.125	TIG Rod Box	363423

P.O.# - 93118

PSI QC CW

Chemical Composition limits

Element	Minimum %	Maximum %
Si	---	0.40
Fe	---	0.40
Cu	---	0.10
Mn	0.50	1.0
Mg	4.3	5.2
Cr	0.05	0.25
Zn	---	0.25
Ti	---	0.15
Be	---	0.0008
Other Each	---	0.05
Other Total	---	0.15
Aluminum	Remainder	

AlcoTec Wire Company hereby certifies that the material covered by this report has been inspected in accordance with and been found to meet the applicable requirements of specification AWS A5.10-92 and any order requirements listed below.

All Packaging materials are in compliance with CONEG legislation.

Additional Order Requirements:

V.P. - Quality Control

37

RANOR, INC

BELLA DRIVE, P.O. BOX 458 • WESTMINSTER, MASSACHUSETTS 01473

Certificate of Compliance

The undersigned hereby certifies that the following material and/or services are in accordance with the requirements of Process Systems International, Inc.

Purchase Order Number 555822-00 and RANOR, INC Shop Order Number 7300FM

Quantity	Description, Part or Assembly Number	Material Type	Specification Number or Material Heat Number
1	Beam Splitter Chamber Per V049-4-003 Rev. 0 Ranor s/n 7300-03 Dimensional Inspection Reports & Stress Relief Chart attached NCR No. 1013 Applies	SA240-304L	Material Supplied by P.S.I., Inc.

PSI Doc# V049-8-634-03

Signature Steve Belskis

Title Assistant Quality Assurance Manager

Date February 27, 1997

This certification shall be completed and signed by either an officer of the company, or a designated responsible person.

RANOR, INC

NONCONFORMANCE REPORT

FORM QA 12.1 REV. 6 (07/30/96)

NCR NUMBER	PAGE 1 OF 2
NCR- 1013	SKETCH ATTACHED ☒

JOB NUMBER	CUSTOMER	PURCHASE ORDER NUMBER	QUANTITY
7300Flm	PSI	555822-00	1

PART DESCRIPTION	DOCUMENT NUMBER AND REVISION	SERIAL NUMBER
BSC OVERALL ASSY LIGO VAC	V049-4-101 REV-1	-03

CODE/SPECIFICATION: ☐ ASME SECTION III ☐ SAFETY RELATED ☐ ASME SECTION VIII ☐ MIL SPEC ☒ COMMERCIAL

DESCRIPTION OF NONCONFORMANCE

ITEM	REQUIREMENT	NONCONFORMANCE
1	96.875 ± 0.100 ZONE B-7	96.763, 96.762, -.012, -.013
2	48.44 ± 045 ZONE B-8	44.499, +014
3	113.75 ± 0.10 ZONE C-6	113.577, -.073
4	⏥ .030 B ZONE C-5	0.089 +.059
5	⊥ .030 C ZONE C-5	0.074 +.044
6	56.875 ± 0.10 ZONE C-5	56.762 -.013

REMARKS: SEE INSP LOG FOR DIMENSION LOCATION IN REF TO PRINT VIEW. LENGTH DIMENSIONS OUT OF SPEC ARE DERIVED FROM A MIN/MAX CONDITION

ROUTING SHEET IDENTIFIED WITH NCR NO. AND DATE OF ISSUE: BY [signature] DATE: 2-8-97
JOB FOLDER

ORIGINATOR/INSPECTOR: [signature] DATE: 2-8-97

RESPONSIBILITY FOR NONCONFORMANCE

☐ VENDOR ☐ DESIGN ☐ MATERIAL ☐ CUTTING ☐ FORMING ☐ WELDING
☐ MACHINING ☐ INSPECTION ☐ CALIBRATION ☐ QC ☐ QA ☒ OTHER _____

TECHNICAL JUSTIFICATION/DESCRIPTION OF DISPOSITION

ITEM	TECHNICAL JUSTIFICATION	DESCRIPTION OF DISPOSITION
1-9	Submit to PSI for Tech. Justification	Use As Is
	& Written Disposition. [signature] 2.10.97	per G. Seneca / PSI
		See Attached FAX Copy MB

TECHNICAL JUSTIFICATION: BY — DATE: —

DISPOSITION: BY [signature] DATE: 2.27.97

DISPOSITION OF NONCONFORMANCE	RECOMMENDED DISPOSITION	
☐ ACCEPT AS IS ☒ USE AS IS	☒ ACCEPTED	10CFR21 EVALUATION REQUIRED: ☐ YES ☒ NO
☐ REPAIR /REWORK ☐ REJECT	☐ NOT ACCEPTED	CORRECTIVE ACTION REQUIRED: ☒ YES ☐ NO
CONDITIONAL RELEASE: CR NO. —		CUSTOMER APPROVAL REQUIRED: ☒ YES ☐ NO
		APPROVED BY: G. Seneca / PSI MB DATE 2.27.97

APPROVAL OF DISPOSITION:		VERIFICATION OF DISPOSITION:	
VP-ENGINEERING [signature]	DATE 2-27-97	ACCEPTED BY [signature]	DATE 2.27.97
QA MANAGER [signature]	DATE 2/27/97	QA MANAGER [signature]	DATE 2/27/97
ANI —	DATE —	ANI —	DATE —

(1)

RANOR, INC

NONCONFORMANCE REPORT

FORM QA 12.1 REV. 6 (07/30/96)

NCR NUMBER: NCR- 1013 | PAGE 1 OF 2 | SKETCH ATTACHED

JOB NUMBER	CUSTOMER	PURCHASE ORDER NUMBER	QUANTITY
[illegible]	PSI	555311-00	1

		SERIAL NUMBER
BSC OVERALL ASSY LIGO VAC	V049-4-101 REV-1	-03

[illegible]

DESCRIPTION OF NONCONFORMANCE

ITEM	REQUIREMENT	NONCONFORMANCE
1	96.875 ± 0.100 ZONE B-7	96.763, 96.762, -013, -013 OK
2	48.44 ± .045 ZONE B-8	48.499, +014 ? .010" OVER LIG
3	113.75 ± 0.10 ZONE C-6	113.577, -073 "B" or "C" NOZZLES?
4	// .030 B ZONE C-5	0.089 +059 ?
5	⊥ .030 C ZONE C-5	0.074 +.044 OK
6	56.875 ± 0.10 ZONE C-5	56.762 -013 OK

REMARKS. SEE INST LOG FOR DIMENSION LOCATION IN REF TO PRINT VIEW.
LENGTH DIMENSIONS OUT OF SPEC ARE DERIVED FROM A MIN/MAX LOCATION

ROUTING SHEET IDENTIFIED WITH NCR NO. AND DATE OF ISSUE: BY [signature] DATE: 2-8-97
JPB FOLDER

ORIGINATOR/INSPECTOR [signature] DATE 2-8-97

RESPONSIBILITY FOR NONCONFORMANCE

☐ VENDOR ☐ DESIGN ☐ MATERIAL ☐ CUTTING ☐ FORMING ☐ WELDING
☐ MACHINING ☐ INSPECTION ☐ CALIBRATION ☐ QC ☐ QA ☒ OTHER _____

TECHNICAL JUSTIFICATION/DESCRIPTION OF DISPOSITION

ITEM	TECHNICAL JUSTIFICATION	DESCRIPTION OF DISPOSITION
1-7	Submit to PSI for Tech. Justification	USE AS IS
	& Written Disposition. [signature] 2-10-97	

TECHNICAL JUSTIFICATION: BY [signature] DATE 2-27-97

DISPOSITION: BY [signature] /GS DATE 2-27-97

DISPOSITION OF NONCONFORMANCE: ☐ ACCEPT AS IS ☐ USE AS IS ☐ REPAIR/REWORK ☐ REJECT
CONDITIONAL RELEASE CR NO _____

RECOMMENDED DISPOSITION: ☐ ACCEPTED ☐ NOT ACCEPTED

10CFR21 EVALUATION REQUIRED: ☐ YES ☐ NO
CORRECTIVE ACTION REQUIRED: ☐ YES ☐ NO
CUSTOMER APPROVAL REQUIRED: ☐ YES ☐ NO
APPROVED BY DATE

APPROVAL OF DISPOSITION
P-ENGINEERING DATE
QA MANAGER DATE
ANI DATE

VERIFICATION OF DISPOSITION
ACCEPTED BY DATE
QA MANAGER DATE
ANI DATE

2

RANOR, INC

NONCONFORMANCE REPORT

FORM QA 12.1 REV. 5 (07/30/96)

NCR NUMBER	PAGE 2 OF 3
NCR- 1013	SKETCH ATTACHED

DESCRIPTION OF NONCONFORMANCE

ITEM	REQUIREMENT	NONCONFORMANCE
7	1 | D30 | B | ZONE C-7	0.037 +.007 OK
8	UPPER SHELL - FLAT FACE RING	FOUR SPOTS ON FACE RECEIVED
	*V049-4-041 32	MINOR DENTS LOCATED AT HOLES
		2, 14, 26 AND 38. AREAS REPAIRED
		PER STONING PER P.S.I. PHIL F.
9	UPPER SHELL - SIDE FLANGE FACE	5 SMALL DENTS LOCATED ON FACE
	32	CENTRAL TO HOLE PATTERN -
		AREAS ~~REPAIRED~~ ~~[illegible]~~ PER PHIL F. ON 2/
		TO BE REPAIRED BY STONING
		Witnessed by Genes 2-12-97

TECHNICAL JUSTIFICATION/DESCRIPTION OF DISPOSITION

ITEM	TECHNICAL JUSTIFICATION	DESCRIPTION OF DISPOSITION

BSC S/N V0494003-03 Date

INSPECTION LOG

Sect "A-A"							
		Dimension	Actual @ 0	Actual @ 90	Actual @ 180	Actual @ 270	Tolerance
1	Face to Face "D"	96.875"	96.763 to 96.793				.1"
2			96.762 to 96.810				
3	Perpendicular to "A"		L /R	0.031	L /R	0.023	.075"
4	Perpendicular to "C"		L /R	0.016	L /R	0.033	.075"
5	Parrallel to "B"		L /R	0.054	L /R	0.071	.075"
6	Center 60" to Face "D"	~~48.437"~~ 48.440	44.499 (270° R.S.) 44.478 (L.S.)		44.425 (90° R.S.) 44.458 (L.S.)		.045"
7	Perpendicular to "A"		L /R	0.048	L /R	0.052	.075"
8	Perpendicular to "C"		L /R	0.055	L /R	0.032	.075"
9	Parrallel to "B"		L /R	0.053	L /R	0.070	.075"
10	Center to Center "D"	66"		—		—	
11	Parrallel to "A"		L /R	0.002	L /R	—	.075"
12	Perpendicular to "B"	℄ to B	L /R	0.061	L /R	—	.075"
13	Parrallel to "C"		0.023	L /R	—	L /R	.075"
14	Center 60" to Center "D"	33"	33.070 (TOP) 33.016 (BOTTOM)		33.096 (TOP) 33.008 (BOTTOM)		
15	Parrallel to "A"		L /R	0.019	L /R	—	.075"
16	Perpendicular to "B"	℄ to B	L /R	0.027	L /R	—	.075"
17	Parrallel to "C"		0.041	L /R	—	L /R	.075"

-.012 *
-.013 *
+.014 *

KJC 661 RANOR 2-8-97

* = NCR 1013

(1)

S/N V0494003-03

Date

BSC
INSPECTION LOG

Elevation		Dimension	Actual @ 0	Actual @ 90	Actual @ 180	Actual @ 270		
View 18	Center 60" to Center "D"	44.50"	44.478	RIGHT SIDE	44.499	RIGHT SIDE	021	
	Diff. of "B" & "B"	—	44.458	LEFT SIDE	44.425	LEFT SIDE	033	
	Diff. of "C" & "C"	—						
	Total Differance	0.054					.075"	
19	B's Parrallel to "A"	0.023					.030"	
20	C's Parrallel to "A"	0.018					.030"	
21	5/8 Port 48 Deg to Rt.	OK	>		>			
22	5/8 Port 48 Deg to Lf.	OK		>		>		
Plan								
View 23	Face to Face 60"	113-3/4"	113.577	113.714				-073 *
	"B" Nozzles		>		>		.1"	
24	Parrallel to"B"		> 0.089		>		.030"	+059 *
25	Perpendicular to "A"		> 0.022		>		.030"	
26	Perpendicular to "C"		> 0.074	>	>	>	.030"	+044 *
27	56-7/8" Left & Right		L 56.762		L 56.815		.1"	-013 *
			R 56.842		R 56.872		.1"	
28	Face to Face 60"	113-3/4"	113.710	113.741				
	"C" Nozzles			>		>	.1"	
29	Parrallel to"C"		0.016	> ~~0.0~~		>	.030"	
30	Perpendicular to "A"			> 0.021		>	.030"	
31	Perpendicular to "B"		>	> 0.037	>	>	.030"	+007 *
32	56-7/8" Left & Right			L 56.868		L 56.844	.1"	
				R 56.877		R 56.847	.1"	

ILIC
861
RANOR

(5)

S/N V0494003-03

Date

INSPECTION LOG

Annulus Port on 104.5" flange is @ 135 & 315 Deg			OK				
Drawing V0494003							
Support Leg Lug Dim.		26.48"	OK TO SUPPORT ASSY				
		Dimension	Actual @ 0	Actual @ 90	Actual @ 180	Actual @ 270	
		60.5" Dia.	>	>	>	>	
		104.5" Dia.	>	>	>	>	

BSC S/N V0494003-03 Date

INSPECTION LOG

Sect "A-A"		Dimension	Actual @ 0	Actual @ 90	Actual @ 180	Actual @ 270	Tolerance	
1	Face to Face "D"	96.875"	96.763 to 96.793				.1"	-.012 *
2			96.762 to 96.810					-.013 *
3	Perpendicular to "A"		L /R	0.031	L /R	0.023	.075"	
4	Perpendicular to "C"		L /R	0.016	L /R	0.033	.075"	
5	Parrallel to "B"		L /R	0.054	L /R	0.071	.075"	
6	Center 60" to Face "D"	~~48.437"~~ 48.440	44.499 (270° R.S.) 44.478 (L.S.)		44.425 (90° R.S.) 44.458 (L.S.)		.045"	+.014 *
7	Perpendicular to "A"		L /R	0.048	L /R	0.052	.075"	
8	Perpendicular to "C"		L /R	0.055	L /R	0.032	.075"	
9	Parrallel to "B"		L /R	0.053	L /R	0.070	.075"	
10	Center to Center "D"	66"		—		—		
11	Parrallel to "A"		L /R	0.002	L /R	—	.075"	
12	Perpendicular to "B"	℄ to ℄	L /R	0.061	L /R	—	.075"	
13	Parrallel to "C"		0.023	L /R	—	L /R	.075"	
14	Center 60" to Center "D"	33"	33.070 (TOP) 33.016 (BOTTOM)		33.094 (TOP) 33.008 (BOTTOM)			
15	Parrallel to "A"		L /R	0.019	L /R	—	.075"	
16	Perpendicular to "B"	℄ to ℄	L /R	0.027	L /R	—	.075"	
17	Parrallel to "C"		0.041	L /R	—	L /R	.075"	

KJC 981 RANCHO 2-8-97

* = NCR 1013

(2)

S/N V0494003-03

Date

BSC
INSPECTION LOG

Elevation		Dimension	Actual @ 0	Actual @ 90	Actual @ 180	Actual @ 270	
View 18	Center 60" to Center "D"	44.50"	44.478	RIGHT SIDE	44.499	RIGHT SIDE	.021
	Diff. of "B" & "B"	—	44.458	LEFT SIDE	44.425	LEFT SIDE	.033
	Diff. of "C" & "C"	—					.075"
	Total Differance	0.054					
							.030"
19	B's Parrallel to "A"	0.023					.030"
20	C's Parrallel to "A"	0.018					
21	5/8 Port 48 Deg to Rt.	OK	>		>		
22	5/8 Port 48 Deg to Lf.	OK		>		>	
Plan							
View 23	Face to Face 60"	113-3/4"	113.577	113.714			.073 *
	"B" Nozzles		>		>		.1"
24	Parrallel to"B"		> 0.089		>		.030" +.059 *
25	Perpendicular to "A"		> 0.022		>		.030"
26	Perpendicular to "C"		> 0.074	>	>	>	.030" +.044 *
27	56-7/8" Left & Right		L 56.762		L 56.815		.1" -.013 *
			R 56.842		R 56.872		.1"
28	Face to Face 60"	113-3/4"	113.710	113.741			
	"C" Nozzles			>		>	.1"
29	Parrallel to"C"		0.016	> 0.0		>	.030"
30	Perpendicular to "A"			> 0.021		>	.030"
31	Perpendicular to "B"		>	> 0.037	>	>	.030" +.007 *
32	56-7/8" Left & Right			L 56.868		L 56.844	.1"
				R 56.877		R 56.847	.1"

KJC
681
RANCH

08

S/N V0494003-03

Date

INSPECTION LOG

Annulus Port on 104.5" flange is @ 135 & 315 Deg			OK				
Drawing V0494003							
	Support Leg Lug Dim.						
		26.48"	OK TO SUPPORT ASSY				
		Dimension	Actual @ 0	Actual @ 90	Actual @ 180	Actual @ 270	
		60.5" Dia.	>	>	>	>	
		104.5" Dia.	>	>	>	>	

(9)

RANOR, INC Final Acceptance: By: KJC 661 RANOR Date: 1-8-97

DIMENSIONAL INSPECTION REPORT BSC UNIT #03

FORM QA 9.1 REV. 3 (10/15/96)

Customer: PSI	Level No.:	Report No.: —
Part Description: Pre BSC SHELL LOWER MACH	P.O. No. 555822-00	Job No. 7300 FLM
Drawing No. & Rev. V049-4-003 REV-2	Serial No. UNIT #3	Page 1 con't

Item No.	Drawing Dimension and Tolerances	Drawing Zone	Actual Dimension	Instrument Serial No.	Ref. / NCR Information	Sign Off
1	Ø61.37 +.00 −.03 NOTE 11	B-5	61.360	V82QCI	0° D.P.	KJC 661 RANOR 1-8-97
2	Ø61.37 +.00 −.03		61.350	MATE TYP	90°	
3	Ø61.37 +.00 −.03		61.351		180°	
4	Ø61.37 +.00 −.03		61.353		270°	
5	Ø61.37 +.00 −.03	NOTE 7	SEE ABOVE	—		
6	↧ 9/16 TYP	11	9/16	SCOLQCI-2		
7	55.87	C-3	55.867	HC-8 DI25589QCI		
8	▱ .015	A-8	.005	MATE TYP	0°	
9	⊥ .015 A	A-8	.005			
10	▱ .015	A-4	.010		90°	
11	⊥ .015 A		.005			
12	// .015 B		.005			
13	▱ .015	A-6	.005		180°	
14	// .015 B		.010			
15	⊥ .015 A		.010			
16	▱ .015	A-5	.005		270°	
17	⊥ .015 A		.005			
18	⊥ .015 B		.005			
19	55.500 TYP 4X	B-8	55.503			
20	▱ .015	B-8	.010			
21	// .015 A	B-8	.010			
22	⊥ .015 B	B-8	.010			
23	Ø 14.06 TYP 4X	3	MIN 14.045 MAX 14.051	HC-8 EF.	"D" PARTS	
24	44.50 TYP 4X	B-8	44.501	HC-8 DI25589 QCI		
25	33.0 TYP 4X	D-8	33.002	HC-8 EF		
26	// .025 A TYP	D-8	.01	HC-8 DI25589 QCI		
27	⊥ .025 B TYP	D-8	.01			

RANOR, INC

DIMENSIONAL INSPECTION REPORT

FORM QA 9.1 REV. 2 (4/1/96) BSC - UNIT #3

Customer: PROCESS SYSTEMS INTER	Level No.: 2C	Report No.: N/A
Part Description: 104 1/2" ID FLANGE (BSC) FLAT FACE	P.O. No. 555822-00	S.O. No. 7300 F/M
Drawing No. & Rev. V049-4-041 REV-2	Serial No. 7300-3	Sheet 1 con't Rev.: —

Item No.	Drawing Dimension and Tolerances	Drawing Zone	Actual Dimension	Instrument Serial No.	Ref. / NCR Information	Sign Off
1	1.00 +.13 −.00	D-1	1.08-1.09	DV062QC-2		KJC 9811-28-97 RANOR
2	125		125 MAX	VISUAL		
3	32 C ± 8RMS		30-38	PS01QC		
4	⌭ | .015 |		W 0.003	VC-3		
5	0.50	D-2	0.50-0.51	DV062QC-2		
6	0.06 RAD	D-2	0.06	RG8QC		
7	1/8	C-3	0.10	DV062QC-2		
8	45°	C-3	45°	DV062QC-2		
9	Ø 105.13 +.06 −.00	D-3	105.144	DM06QC		
10	Ø 1.00 THRU 48X	D-5	0.998	DV12QC		
11	110.250 B.C.	D-5	110.25	DV12QC		
12	3.75°	D-6	3.75°	DV12QC		
13	7.50° (CHORD 7.2106)	D-6	7.5°	DV12QC		
14	Ø 104.50 +.00 −.03 =P.	C-7	104.486	IM4016QC		
15	63		63 MAX	VISUAL		
16	Ø 5/8 THRU 2X	C-2	0.626	DV062QC-2		
17	0.76 C'BORE		0.752	NOTE TYP		
18	↧ 1/8		0.12			
19	53.531 RAD		53.521			
20	45°	D-7	45°			
21	180° APART	C-2	180°			
22	Ø 112.50 O.D. REF	C-5				
23	SCRIBED-STAMP 0°	B-1	OK	VISUAL		
24	SCRIBE S/N	—	OK	VISUAL		

RANOR, INC BSC – UNIT #3

DIMENSIONAL INSPECTION REPORT

FORM QA 9.1 REV. 2 (4/1/96)

Customer: PROCESS SYSTEMS INTER.	Level No.: 1C	Report No.: N/A
Part Description: 104 1/2" I.D. FLANGE (BSC) GROOVED	P.O. No. 555822-00	S.O. No. 7300 F/m
Drawing No. & Rev. V049-4-022 REV- ~~4~~ 5 (1-28-97)	Serial No. 7300-3	Sheet 1 con't 2 Rev.: —

Item No.	Drawing Dimension and Tolerances	Drawing Zone	Actual Dimension	Instrument Serial No.	Ref. / NCR Information	Sign Off
1	1.25 +0.13 −0.00	B-1	1.319-1.322	M12QCI		1-28-97
2	125		125 MAX	VISUAL		
3	63		63 MAX	VISUAL		
4	▱ |.015|		W 0.002	VC-3		
5	1.00	B-3	0.992-0.996	M01QCI-1		
6	Ø 104.50	B-3	104.486	IM40160QCI		
7	63	B-2	63 MAX	VISUAL		
8	Ø 105.63	B-2	105.656	DM06QCI	059/1/32	
9	0.015 RAD		0.015	RG8QCI		
10	0.060 RAD		0.06	RG8QCI		
11	Ø 106.38		106.374	DV062QCI-2		
12	Ø 107.75		107.740	DV062QCI-2		
13	↧ 0.38	B-1	0.38	DM06QCI		
14	0.03 RAD MAX	C-3	0.03	RG8QCI		
15	Ø 105.25	B-2	105.242	DV062QCI-2		
16	0.335-0.340	B-4	0.337	DV062QCI-2		
17	↧ 0.206-0.214		0.211	DM06QCI		
18	32 C ± 8 RMS		31-39	PS01QCI		
19	Ø 108.25	B-2	108.242	DV062QCI-2		
20	0.335-0.340	B-4	0.336	DV062QCI-2		
21	↧ 0.206-0.340		0.206	DM06QCI		
22	32 C ± 8 RMS		30-37	PS01QCI		
23	63 TYP		63 MAX	VISUAL		
24	R 0.020-0.035 TYP		0.03	RG8QCI		
25	75° TYP		75°	VP1QCI		
26	BREAK ALL EDGES (.005R)		OK	VISUAL		

RANOR, INC

DIMENSIONAL INSPECTION REPORT

FORM QA 9.1 REV. 2 (4/1/96)

Customer: PROCESS SYSTEMS INTER	Level No.: 1C	Report No.: N/A
Part Description: 104 1/2 I.D. FLANGE (BSC) GROOVED	P.O. No. 555822-00	S.O. No. 7300 F/M
Drawing No. & Rev. V049-4-022 REV- 5 (1-26-97)	Serial No. 7300-3	Sheet 2 con't Rev.: —

Item No.	Drawing Dimension and Tolerances	Drawing Zone	Actual Dimension	Instrument Serial No.	Ref. / NCR Information	Sign Off
27	63	B-4	63 MAX	VISUAL		KJC 1-28-97 RANOR
28	45° 8X	C-8	45°	DV12QCI		
29	0.25	D-4	0.247-0.245	DV12QCI		
30	0.50	D-4	0.49-0.495	DV12QCI		
31	BREAK EDGES (.005 R)	D-3	OK	VISUAL		
32	↧ 0.146-0.156	C-4	0.146	DV12QCI		
33	↧ 0.080-0.156	C-3	0.120	DV12QCI		
34	BREAK EDGES (.005 R)	C-2	OK	VISUAL		
35	Ø 1.00 THRU 48X	D-5	0.995	DV12QCI		
36	110.25 B.C. CHORD	D-5	110.25	DV12QCI		
37	3.75°	D-6	3.75°	MATE TYP		
38	7.50° CHORD 7.210	D-6	7.5°			
39	7.50° SECTION A-A	PER D.B. D-6	7.5°			
40	Ø 5/8 THRU 2X TYP	D-1	0.628			
41	0.76 C'BORE		0.75			
42	↧ 1/8		0.10			
43	180°		180°	DV12QCI		
44	53.531 RAD		53.547	DV062QCI-2		
45	45°		45°	SC06QCI-2		
46	1/8"		1/8			
47	SCRIBE & STAMP 0°	B-8	OK	VISUAL		
48	37.5°		37.5°	DV062QCI-2		
49	ETCH S/N		OK	VISUAL		
50	7.5°		7.5°	DV12QCI		

RANOR, INC

DIMENSIONAL INSPECTION REPORT

FORM QA 9.1 REV. 2 (4/1/96)

Customer: PROCESS SYSTEMS INTER	Level No.: 1C	Report No.: N/A
Part Description: 60 1/2" I.D. FLANGE (BSC) GROOVED	P.O. No. 555822-00	S.O. No. 7300 F/M
Drawing No. & Rev. V049-4-019 REV-3	Serial No. 7300-3	Sheet 1 con't 2 Rev.: —

Item No.	Drawing Dimension and Tolerances	Drawing Zone	Actual Dimension	Instrument Serial No.	Ref. / NCR Information	Sign Off
1	1.38 $^{+.13}_{-.00}$	B-1	1.45-1.452	DV12QC=		KJC 6/11-6-97 RANOR
2	125	B-1	68	PS01QC=		
3	63	C-1	63 MAX	VISUAL		
4	⏥ | .010 |	C-1	0.003	VC-1		
5	1.00	C-3	0.995-1.001	DV12QC=		
6	Ø 60.50 $^{-.03}_{-.08}$	B-3	60.482	DM06QC=		
7	63	B-3	63 MAX	VISUAL		
8	Ø 61.40 $^{+.03}_{-.00}$	B-3	61.402	DM45QC=		
9	0.015 RAD	B-3	0.015	RG8QC=		
10	0.06 RAD	C-3	0.06	RG8QC=		
11	Ø 62.38	C-3	62.372	DV12QC=		
12	Ø 63.75	C-3	63.740	DV12QC=		
13	⏊ 0.50	C-2	0.498	DM06QC=		
14	0.03 RAD MAX TYP	C-4	0.03 MAX	RG8QC=		
15	Ø 61.25	C-3	61.25	DV12QC= ~~DM06QC=~~	KJC 6-11-97	
16	0.335 - 0.340	DETAIL-D B-4	OK TO GAGE	PGS2QC=		
17	0.206 - 0.214		0.207	DM06QC=		
18	32 C ± 8RMS		26-28	PS01QC=		
19	Ø 64.25	C-2	64.248	DV8QC=		
20	0.335 - 0.340	DETAIL-D B-4	OK TO GAGE	PGS2QC=		
21	0.206 - 0.214		0.209	DM06QC=		
22	32 C ± 8RMS		24-28	PS01QC=		
23	63		63 MAX	VISUAL		
24	RAD $^{0.020}_{0.035}$ TYP		0.03	RG8QC=		
25	75° TYP		75°	VP1QC=		
26	63 TYP		63 MAX	VISUAL		

RANOR, INC

DIMENSIONAL INSPECTION REPORT

FORM QA 9.1 REV. 2 (4/1/96)

Customer: PROCESS SYSTEM INTER	Level No.: 1C	Report No.: N/A
Part Description: 60 1/2 I.D. FLANGE (BSC) GROOVED	P.O. No. 555822-00	S.O. No. 7300 F/M
Drawing No. & Rev. V049-4-019 REV-3	Serial No. 7300-3	Sheet 2 con't Rev.: —

Item No.	Drawing Dimension and Tolerances	Drawing Zone	Actual Dimension	Instrument Serial No.	Ref. / NCR Information	Sign Off
27	BREAK ALL EDGES (.005 R)	C-4	OK	VISUAL		KJC 661 1-6-97 RANOR
28	60° 6X DETAIL C	C-6	60°	DVIZRC=		
29	0.25	D-5	0.248	DVIZRC=		
30	0.50	D-5	0.496	DVIZRC=		
31	BREAK ALL EDGES (.005 R)	D-3	OK	VISUAL		
32	↧ 0.146 - 0.156	C-5	0.153	DMOGQC=		
33	↧ 0.080 - 0.156	C-3	0.128	DMOGQC=		
34	BREAK ALL EDGES (.005 R)	C-3	OK	VISUAL		
35	Ø 1.00 30X	D-5	1.007	DVIZRC=		
36	66.250 B.C.	D-5	66.25			
37	6.0°	D-6	6.0°			
38	12.0°	D-6	12.0°			
39	48°	D-7	48°			
40	Ø 5/8 THRU	D-2	0.627			
41	0.76 C'BORE		TYP 0.76			
42	↧ 1/8		1/8			
43	31.531 RAD		31.526			
44	45°		45°			
45	1/8"		1/8			
46	68.50 O.D. REF	C-2	68 1/2	TAPE		
47	SCRIBE & STAMP 0°	B-2	OK	VISUAL		
48	SCRIBE S/N.	—	OK	VISUAL		KJC 661 1-7-96 RANOR

RANOR, INC

DIMENSIONAL INSPECTION REPORT

FORM QA 9.1 REV. 2 (4/1/96)

Customer: PROCESS SYSTEMS INTER	Level No.: 1C	Report No.: N/A
Part Description: 60 1/2" I.D. FLANGE (BSC) GROOVED	P.O. No. 555822-00	S.O. No. 7300 F/M
Drawing No. & Rev. V049-4-019 REV-3	Serial No. 7300-11	Sheet 1 con't 2 Rev.: —

Item No.	Drawing Dimension and Tolerances	Drawing Zone	Actual Dimension	Instrument Serial No.	Ref. / NCR Information	Sign Off
1	1.38 +.13 −.00	B-1	1.456-1.458	M12QCI		RRG 689 11-13-96 RANOR
2	125	B-1	50	PS01QCI		11-5-96
3	63	C-1	54	PS01QCI		RRG 689 11-13-96 RANOR
4	▱ | .010 |	C-1	0.003	VC-1		KJC 681 RANOR
5	1.00	C-3	1.003-1.005	M12QCI		RRG 689 11-13-96 RANOR
6	Ø 60.50 +.03 −.00	B-3	60.484	IM452A IM452BQCI		TYP.
7	63	B-3	63 MAX	VISUAL		
8	Ø 61.40 +.03 −.00	B-3	61.408	IM452BQCI		11-5-96
9	0.015 RAD	B-3	0.015	RG8QCI		KJC 681 RANOR
10	0.06 RAD	C-3	0.06	RG8QCI		RRG 689 11-13-96 RANOR
11	Ø 62.38	C-3	62.384	DV12QCI		TYP.
12	Ø 63.75	C-3	63.752	DV12QCI		
13	↧ 0.50	C-2	0.500	DM06QCI		
14	0.03 RAD MAX TYP	C-4	0.03	RG8QCI		
15	Ø 61.25	C-3	61.252	DV12QCI		
16	0.335 - 0.340	DETAIL-D B-4	0.336	PG52QCI		
17	0.206 - 0.214		0.209	DM06QCI		
18	32 √C ± 8RMS		38	PS01QCI		
19	Ø 64.25	C-2	64.250	DV12QCI		
20	0.335 - 0.340	DETAIL-D B-4	0.336	PG52QCI		
21	0.206 - 0.214		0.209	DM06QCI		
22	32 √C ± 8RMS		29	PS01QCI		
23	63		63 MAX	VISUAL		
24	RAD 0.020 0.035 TYP		0.030	RG8QCI		
25	75° TYP		75°	VP1QCI		
26	63 TYP		63 MAX	VISUAL		

RANOR, INC

DIMENSIONAL INSPECTION REPORT

FORM QA 9.1 REV. 2 (4/1/96)

Customer: PROCESS SYSTEM INTER	Level No.: 1C	Report No.: N/A
Part Description: 60 1/2 I.D. FLANGE (BSC) GROOVED	P.O. No. 555822-00	S.O. No. 7300 F/M
Drawing No. & Rev. V049-4-019 REV-3	Serial No. 7300-11	Sheet 2 con't Rev.: —

Item No.	Drawing Dimension and Tolerances	Drawing Zone	Actual Dimension	Instrument Serial No.	Ref. / NCR Information	Sign Off
27	BREAK ALL EDGES (.005 R)	C-4	O.K.	VISUAL		11-13-96
28	60° 6X DETAIL C	C-6	60°	DVIZQCI		11-6-97
29	0.25	D-5	0.245			
30	0.50	D-5	0.49			
31	BREAK ALL EDGES (.005 R)	D-3	OK	VISUAL		
32	↧ 0.146 - 0.156	C-5	0.150	DMDLQCI		
33	↧ 0.080 - 0.156	C-3	0.123			
34	BREAK ALL EDGES (.005 R)	C-3	OK	VISUAL		
35	Ø 1.00 30X	D-5	1.008	DVIZQCI		
36	66.250 B.C.	D-5	66.25			
37	6.0°	D-6	6.0°			
38	12.0°	D-6	12.0°			
39	48°	D-7	48°			
40	Ø 5/8 THRU	D-2	0.627			
41	0.76 C'BORE		0.76			
42	↧ 1/8		1/8			
43	31.531 RAD		31.527			
44	45°		45°			
45	1/8"		1/8			
46	68.50 O.D. REF	C-2	68 1/2	TAPE		
47	SCRIBE & STAMP 0°	B-2	OK	VISUAL		
48	SCRIBE S/N.	—	OK	VISUAL		11-5-96

RANOR, INC

DIMENSIONAL INSPECTION REPORT

FORM QA 9.1 REV. 2 (4/1/96)

Customer: PROCESS SYSTEMS INTER	Level No.: 1C	Report No.: N/A
Part Description: 60 1/2" I.D. FLANGE (BSC) GROOVED	P.O. No. 555822-00	S.O. No. 7300 F/M
Drawing No. & Rev. V049-4-019 REV-3	Serial No. 7300-12	Sheet 1 con't 2 Rev.: —

Item No.	Drawing Dimension and Tolerances	Drawing Zone	Actual Dimension	Instrument Serial No.	Ref. / NCR Information	Sign Off
1	1.38 +.13 −.00	B-1	1.452-1.455	M12QCI		RRG 689 11-13-96 RANOR
2	125	B-1	50-43	PS01QCI		11-5-96
3	63	C-1	46	PS01QCI		RRG 689 11-13-96 RANOR
4	▱ | .010 |	C-1	0.003	VC-1		KJC 661 RANOR
5	1.00	C-3	1.006-1.009	M12QCI		RRG 689 11-13-96 RANOR
6	Ø 60.50 +.03 −.00	B-3	60.485	IM452A IM452BQCI		TYP.
7	63	B-3	63 MAX	VISUAL		
8	Ø 61.40 +.03 −.00	B-3	61.4095	IM452BQCI		11-5-96
9	0.015 RAD	B-3	0.015	RG8QCI		KJC 661 RANOR
10	0.06 RAD	C-3	0.06	RG8QCI		RRG 689 11-13-96 RANOR
11	Ø 62.38	C-3	62.387	DV12QCI		TYP.
12	Ø 63.75	C-3	63.749	DV12QCI		
13	↧ 0.50	C-2	0.496	DM06QCI		
14	0.03 RAD MAX TYP	C-4	0.03	RG8QCI		
15	Ø 61.25	C-3	61.255	DV12QCI		
16	0.335 - 0.340	DETAIL-D B-4	0.335	PGS2QCI		
17	0.206 - 0.214		0.206	DM06QCI		
18	32 C ± 8RMS		36	PS01QCI		
19	Ø 64.25	C-2	64.253	DV12QCI		
20	0.335 - 0.340	DETAIL-D B-4	0.336 - 0.337	PGS2QCI		
21	0.206 - 0.214		0.206 - 0.207	DM06QCI		
22	32 C ± 8RMS		30	PS01QCI		
23	63		63 MAX	VISUAL		
24	RAD 0.020 0.035 TYP		0.030	RG8QCI		
25	75° TYP		75°	VP1QCI		
26	63 TYP		63 MAX	VISUAL		

RANOR, INC

DIMENSIONAL INSPECTION REPORT

FORM QA 9.1 REV. 2 (4/1/96)

Customer: PROCESS SYSTEM INTER	Level No.: 1C	Report No.: N/A
Part Description: 60 1/2 I.D. FLANGE (BSC) GROOVED	P.O. No. 555822-00	S.O. No. 7300 F/M
Drawing No. & Rev. V049-4-019 REV-3	Serial No. 7300-12	Sheet 2 con't Rev.: —

Item No.	Drawing Dimension and Tolerances	Drawing Zone	Actual Dimension	Instrument Serial No.	Ref. / NCR Information	Sign Off
27	BREAK ALL EDGES (.005 R)	C-4	O.K.	VISUAL		11-13-96
28	60° 6X DETAIL C	C-6	60°	DVI2RCE		1-6-97
29	0.25	D-5	0.246			
30	0.50	D-5	0.492			
31	BREAK ALL EDGES (.005 R)	D-3	OK	VISUAL		
32	↧ 0.146 - 0.156	C-5	0.150	DM060CE		
33	↧ 0.080 - 0.156	C-3	0.120	DM060CE		
34	BREAK ALL EDGES (.005 R)	C-3	OK	VISUAL		
35	Ø 1.00 30X	D-5	1.005	DVI2RCE		
36	66.260 B.C.	D-5	66.25			
37	6.0°	D-6	6.0°			
38	12.0°	D-6	12.0°			
39	48°	D-7	48°			
40	Ø 5/8 THRU	D-2	0.627			
41	0.76 C'BORE		0.76			
42	↧ 1/8		1/8			
43	31.531 RAD		31.520			
44	45°		45°			
45	1/8"		1/8			
46	68.50 O.D. REF	C-2	68 1/2	TAPE		
47	SCRIBE & STAMP 0°	B-2	OK	VISUAL		
48	SCRIBE S/N.	—	OK	VISUAL		1-15-96

RANOR, INC

DIMENSIONAL INSPECTION REPORT

FORM QA 9.1 REV. 2 (4/1/96)

Customer: PROCESS SYSTEMS INTER	Level No.: 1C	Report No.: N/A
Part Description: 60 1/2" I.D. FLANGE (BSC) GROOVED	P.O. No. 555822-00	S.O. No. 7300 F/M
Drawing No. & Rev. V049-4-019 REV-3	Serial No. 7300-16	Sheet 1 con't 2 Rev.: —

Item No.	Drawing Dimension and Tolerances	Drawing Zone	Actual Dimension	Instrument Serial No.	Ref. / NCR Information	Sign Off
1	1.38 +.13 −.00	B-1	1.454-1.456	DV062QC-2		
2	125	B-1	125 MAX	VISUAL		RRG 689 RANOR 11-5-96
3	63	C-1	42	PS01QC		11-12-96
4	▱ | .010 |	C-1	W 0.003	VC-1		
5	1.00	C-3	1.00	DV062QC		
6	Ø 60.50 +.03 −.00	B-3	60.489	IM452QC IM452A		11-12-96
7	63	B-3	63 MAX	VISUAL		
8	Ø 61.40 +.03 −.00	B-3	61.403	IM452BQCI		RRG 689 RANOR 11-5-96
9	0.015 RAD	B-3	0.015	RG8QC		
10	0.06 RAD	C-3	0.06	RG1QC		11-12-96
11	Ø 62.38	C-3	62.383	DV062QC		
12	Ø 63.75	C-3	63.747	DV062QC		
13	↧ 0.50	C-2	0.505	DM6QC		
14	0.03 RAD MAX TYP	C-4	0.03	RG1QC		
15	Ø 61.25	C-3	61.249	DV062QC		
16	0.335 - 0.340	DETAIL-D B-4	OK TO GAGE	PG52QC		
17	0.206 - 0.214	↓	0.207	DM6QC		
18	32 C ± 8RMS	↓	30	PS01QC		
19	Ø 64.25	C-2	64.247	DV062QC		
20	0.335 - 0.340	DETAIL-D B-4	OK TO GAGE	PG52QC		
21	0.206 - 0.214	↓	0.206	DM6QC		
22	32 C ± 8RMS	↓	24	PS01QC		
23	63	↓	63 MAX	VISUAL		
24	RAD 0.020 0.035 TYP	↓	0.03	RG1QC		
25	75° TYP	↓	75°	VP1QC		
26	63 TYP	↓	63 MAX	VISUAL		↓

RANOR, INC

DIMENSIONAL INSPECTION REPORT

FORM QA 9.1 REV. 2 (4/1/96)

Customer: PROCESS SYSTEM INTER	Level No.: 1C	Report No.: N/A
Part Description: 60 1/2 I.D. FLANGE (BSC) GROOVED	P.O. No. 555822-00	S.O. No. 7300 F/M
Drawing No. & Rev. V049-4-019 REV-3	Serial No. 7300-16	Sheet 2 con't Rev.: —

Item No.	Drawing Dimension and Tolerances	Drawing Zone	Actual Dimension	Instrument Serial No.	Ref. / NCR Information	Sign Off
27	BREAK ALL EDGES (.005 R)	C-4	OK	VISUAL		11-5-96
28	60° 6X DETAIL C	C-6	60°	DIAL GAGE		
29	0.25	D-5	0.250	↓		
30	0.50	D-5	0.500	↓		
31	BREAK ALL EDGES (.005 R)	D-3	OK	VISUAL		
32	↧ 0.146 - 0.156	C-5	0.150	DIAL GAGE		
33	↧ 0.080 - 0.156	C-3	0.118	↓		
34	BREAK ALL EDGES (.005 R)	C-3	OK	VISUAL		
35	Ø 1.00 30X	D-5	1.005	DIAL GAGE		
36	66.250 B.C.	D-5	66.25	DIAL GAGE		
37	6.0°	D-6	6°			
38	12.0°	D-6	12°			
39	48°	D-7	48°			
40	Ø 5/8 THRU	D-2	0.628			
41	0.76 C'BORE		0.76			
42	↧ 1/8		1/8			
43	31.531 RAD		31.524			
44	45°		45°			
45	1/8"	↓	1/8	↓		
46	68.50 O.D. REF	C-2	68 1/2	TAPE		
47	SCRIBE & STAMP 0°	B-2	—	—	—	
48	SCRIBE S/N.	—	O.K.	VISUAL		RNOR 11-5-96

21

RANOR, INC Final Acceptance: By: KJC 661 RANOR Date: 1-8-97

DIMENSIONAL INSPECTION REPORT BSC UNIT #3

FORM QA 9.1 REV. 3 (10/15/96)

Customer: PSI	Level No.:	Report No.: —
Part Description: Pre BSC SHELL LOWER MACH	P.O. No. 555822-00	Job No. 7300 Flm
Drawing No. & Rev. V049-4-003 REV-2	Serial No. UNIT #3	Page 1 con't

Item No.	Drawing Dimension and Tolerances	Drawing Zone	Actual Dimension	Instrument Serial No.	Ref. / NCR Information	Sign Off
1	Ø61.37 +.00 −.03 NOTE 11	B-5	61.360	V82QCE	0° D.P.	KJC 661 1-8-97 RANOR
2	Ø61.37 +.00 −.03		61.350	MATE TYP	90°	
3	Ø61.37 +.00 −.03		61.351		180°	
4	Ø61.37 +.00 −.03		61.353		270°	
5	Ø61.37 +.00 −.03	NOTE 7	SEE ABOVE	—		
6	↧ 9/16 TYP	11	9/16	SCALE 2		
7	55.87	C-3	55.867	HC-8 DI25589QCE		
8	▱ .015	A-8	.005	MATE TYP	0°	
9	⊥ .015 A	A-8	.005		↓	
10	▱ .015	A-4	.010		90°	
11	⊥ .015 A	↓	.005		↓	
12	// .015 B	↓	.005		↓	
13	▱ .015	A-6	.005		180°	
14	// .015 B	↓	.010		↓	
15	⊥ .015 A	↓	.010		↓	
16	▱ .015	A-5	.005		270°	
17	⊥ .015 A	↓	.005		↓	
18	⊥ .015 B	↓	.005		↓	
19	55.500 TYP 4X	B-8	55.503			
20	▱ .015	B-8	.010			
21	// .015 A	B-8	.010			
22	⊥ .015 B	B-8	.010	↓		
23	Ø 14.06 TYP 4X	3	MIN 14.045 MAX 14.051	HC-8 EF.	"D" PARTS	
24	44.50 TYP 4X	B-8	44.501	HC-8 DI25589QCE		
25	33.0 TYP 4X	D-8	33.002	HC-8 EF		
26	// .025 A TYP	D-8	.01	HC-8 DI25589QCE		
27	⊥ .025 B TYP	D-8	.01	↓		↓

RANOR, INC

DIMENSIONAL INSPECTION REPORT

FORM QA 9.1 REV. 2 (4/1/96) BSC - UNIT #3

Customer: PROCESS SYSTEMS INTER	Level No.: 2C	Report No.: N/A
Part Description: 104 1/2" ID FLANGE (BSC) FLAT FACE	P.O. No. 555822-00	S.O. No. 7300 F/M
Drawing No. & Rev. V049-4-041 REV-2	Serial No. 7300-3	Sheet 1 con't Rev.: —

Item No.	Drawing Dimension and Tolerances	Drawing Zone	Actual Dimension	Instrument Serial No.	Ref. / NCR Information	Sign Off
1	1.00 +.13 −.00	D-1	1.08-1.09	DV0620CI-2		KJC 9811-28-97 RANOR
2	125		125 MAX	VISUAL		
3	32 C ± 8RMS		30-38	RS01QCI		
4	⌭ | .015 |		@ 0.003	VC-3		
5	0.50	D-2	0.50-0.51	DV0620CI-2		
6	0.06 RAD	D-2	0.06	RG8QCI		
7	1/8	C-3	0.10	DV0620CI-2		
8	45°	C-3	45°	DV0620CI-2		
9	Ø 105.13 +.06 −.00	D-3	105.144	DM06QCI		
10	Ø 1.00 THRU 48X	D-5	0.998	DV12QCI		
11	110.250 B.C.	D-5	110.25	DV12QCI		
12	3.75°	D-6	3.75°	DV12QCI		
13	7.50° (CHORD 7.2106)	D-6	7.5°	DV12QCI		
14	Ø 104.50 +.00 −.03 T.P.	C-7	104.486	IM40160QCI		
15	63		63 MAX	VISUAL		
16	Ø 5/8 THRU 2X	C-2	0.626	DV0620CI-2		
17	0.76 C'BORE		0.752	NOTE TYP		
18	↧ 1/8		0.12			
19	53.531 RAD		53.521			
20	45°	D-7	45°			
21	180° APART	C-2	180°			
22	Ø 112.50 O.D. REF	C-5				
23	SCRIBED-STAMP 0°	B-1	OK	VISUAL		
24	SCRIBE S/N	—	OK	VISUAL		

RANOR, INC BSC – UNIT #3

DIMENSIONAL INSPECTION REPORT

FORM QA 9.1 REV. 2 (4/1/96)

Customer: PROCESS SYSTEMS INTER.	Level No.: 1C	Report No.: N/A
Part Description: 104 1/2" I.D. FLANGE (BSC) GROOVED	P.O. No. 555822-00	S.O. No. 7300 F/m
Drawing No. & Rev. V049-4-022 REV-H 5 11/11-20-97	Serial No. 7300-3	Sheet 1 con't 2 Rev.: —

Item No.	Drawing Dimension and Tolerances	Drawing Zone	Actual Dimension	Instrument Serial No.	Ref. / NCR Information	Sign Off
1	1.25 +0.13 −0.00	B-1	1.319-1.322	M12QC-1		11-28-97
2	125		125 MAX	VISUAL		
3	63		63 MAX	VISUAL		
4	▱ |.015|		W 0.002	VC-3		
5	1.00	B-3	0.992-0.996	M01QC-1		
6	Ø 104.50	B-3	104.486	IM40160QC-1		
7	63	B-2	63 MAX	VISUAL		
8	Ø 105.63	B-2	105.656	DM06QC-1	# 054 1/32	
9	0.015 RAD		0.015	RG8QC-1		
10	0.060 RAD		0.06	RG8QC-1		
11	Ø 106.38		106.374	DV062QC-2		
12	Ø 107.75		107.740	DV062QC-2		
13	↧ 0.38	B-1	0.38	DM06QC-1		
14	0.03 RAD MAX	C-3	0.03	RG8QC-1		
15	Ø 105.25	B-2	105.242	DV062QC-2		
16	0.335-0.340	B-4	0.337	DV062QC-2		
17	↧ 0.206-0.214		0.211	DM06QC-1		
18	32 C ± 8 RMS		31-39	PS01QC-1		
19	Ø 108.25	B-2	108.247	DV062QC-2		
20	0.335-0.340	B-4	0.336	DV062QC-2		
21	↧ 0.206-0.340		0.206	DM06QC-1		
22	32 C ± 8 RMS		30-37	PS01QC-1		
23	63 TYP		63 MAX	VISUAL		
24	R 0.020-0.035 TYP		0.03	RG8QC-1		
25	75° TYP		75°	VP1QC-1		
26	BREAK ALL EDGES (.005R)		OK	VISUAL		

RANOR, INC

DIMENSIONAL INSPECTION REPORT

FORM QA 9.1 REV. 2 (4/1/96)

Customer: PROCESS SYSTEMS INTER	Level No.: 1C	Report No.: N/A
Part Description: 104 1/2 I.D. FLANGE (BSC) GROOVED	P.O. No. 555822-00	S.O. No. 7300 F/M
Drawing No. & Rev. V049-4-022 REV- H (1-26-17) SH 1	Serial No. 7300-3	Sheet 2 con't Rev.: —

Item No.	Drawing Dimension and Tolerances	Drawing Zone	Actual Dimension	Instrument Serial No.	Ref. / NCR Information	Sign Off
27	63	B-4	63 MAX	VISUAL		KJC 9/1-28-97 RANOR
28	45° 8X	C-8	45°	DV120CI		
29	0.25	D-4	0.247-0.245	DV120CI		
30	0.50	D-4	0.49-0.495	DV120CI		
31	BREAK EDGES (.005 R)	D-3	OK	VISUAL		
32	↧ 0.146-0.156	C-4	0.146	DV120CI		
33	↧ 0.080-0.156	C-3	0.120	DV120CI		
34	BREAK EDGES (.005 R)	C-2	OK	VISUAL		
35	Ø 1.00 THRU 48X	D-5	0.995	DV120CI		
36	110.25 B.C. CHORD	D-5	110.25	DV120CI		
37	3.75°	D-6	3.75°	NOTE TYP		
38	7.50° CHORD 7.210	D-6	7.5°			
39	7.50° SECTION A-A	PER D.B. D-6	7.5°			
40	Ø 5/8 THRU 2X TYP	D-1	0.628			
41	0.76 C'BORE		0.75			
42	↧ 1/8		0.10			
43	180°		180°	DV120CI		
44	53.531 RAD		53.547	DV062QCI-2		
45	45°		45°	SC06QCI-2		
46	1/8"		1/8			
47	SCRIBE & STAMP O°	B-8	OK	VISUAL		
48	37.5°		37.5°	DV062QCI-2		
49	ETCH S/N		OK	VISUAL		
50	7.5°		7.5°	DV120CI		

RANOR, INC

DIMENSIONAL INSPECTION REPORT

FORM QA 9.1 REV. 2 (4/1/96)

Customer: PROCESS SYSTEMS INTER	Level No.: 1C	Report No.: N/A
Part Description: 60 1/2" I.D. FLANGE (BSC) GROOVED	P.O. No. 555822-00	S.O. No. 7300 FIM
Drawing No. & Rev. V049-4-019 REV-3	Serial No. 7300-3	Sheet 1 con't 2 Rev.: —

Item No.	Drawing Dimension and Tolerances	Drawing Zone	Actual Dimension	Instrument Serial No.	Ref. / NCR Information	Sign Off
1	1.38 +.13 −.00	B-1	1.45-1.452	DV12QC		KJC 661 1-6-97 RANOR
2	125	B-1	68	PS01QC		
3	63	C-1	63 MAX	VISUAL		
4	▱ | .010 |	C-1	0.003	VC-1		
5	1.00	C-3	0.995-1.001	DV12QC		
6	Ø 60.50 +.03 −.00	B-3	60.482	DM06QC		
7	63	B-3	63 MAX	VISUAL		
8	Ø 61.40 +.03 −.00	B-3	61.402	DM45QC		
9	0.015 RAD	B-3	0.015	RG8QC		
10	0.06 RAD	C-3	0.06	RG8QC		
11	Ø 62.38	C-3	62.372	DV12QC		
12	Ø 63.75	C-3	63.740	DV12QC		
13	↧ 0.50	C-2	0.498	DM06QC		
14	0.03 RAD MAX TYP	C-4	0.03 MAX	RG8QC		
15	Ø 61.25	C-3	61.25	DV12QC DM06QC	KJC 1-6-97	
16	0.335 - 0.340	DETAIL-D B-4	OK TO GAGE	PGS2QC		
17	0.206 - 0.214		0.207	DM06QC		
18	32 C ± 8RMS		26-28	PS01QC		
19	Ø 64.25	C-2	64.248	DV8QC		
20	0.335 - 0.340	DETAIL-D B-4	OK TO GAGE	PGS2QC		
21	0.206 - 0.214		0.209	DM06QC		
22	32 C ± 8RMS		24-28	PS01QC		
23	63		63 MAX	VISUAL		
24	RAD 0.020 0.035 TYP		0.03	RG8QC		
25	75° TYP		75°	VP1QC		
26	63 TYP		63 MAX	VISUAL		

RANOR, INC

DIMENSIONAL INSPECTION REPORT

FORM QA 9.1 REV. 2 (4/1/96)

Customer: PROCESS SYSTEM INTER	Level No.: 1C	Report No.: N/A
Part Description: 60 1/2 I.D. FLANGE (BSC) GROOVED	P.O. No. 555822-00	S.O. No. 7300 F/M
Drawing No. & Rev. V049-4-019 REV-3	Serial No. 7300-3	Sheet 2 con't Rev.: —

Item No.	Drawing Dimension and Tolerances	Drawing Zone	Actual Dimension	Instrument Serial No.	Ref. / NCR Information	Sign Off
27	BREAK ALL EDGES (.005 R)	C-4	OK	VISUAL		KJC 661 1-6-97 RANOR
28	60° 6X DETAIL C	C-6	60°	DV12QCI		
29	0.25	D-5	0.248	DV12QCI		
30	0.50	D-5	0.496	DV12QCI		
31	BREAK ALL EDGES (.005 R)	D-3	OK	VISUAL		
32	↧ 0.146 - 0.156	C-5	0.153	DM06QCI		
33	↧ 0.080 - 0.156	C-3	0.128	DM06QCI		
34	BREAK ALL EDGES (.005 R)	C-3	OK	VISUAL		
35	Ø 1.00 30X	D-5	1.007	DV12QCI		
36	66.250 B.C.	D-5	66.25			
37	6.0°	D-6	6.0°			
38	12.0°	D-6	12.0°			
39	48°	D-7	48°			
40	Ø 5/8 THRU	D-2	0.627			
41	0.76 C'BORE		~~7/8~~ 0.76			
42	↧ 1/8		1/8			
43	31.531 RAD		31.526			
44	45°		45°			
45	1/8"		1/8			
46	68.50 O.D. REF	C-2	68 1/2	TAPE		
47	SCRIBE & STAMP 0°	B-2	OK	VISUAL		
48	SCRIBE S/N.	—	OK	VISUAL		KJC 661 11-1-96 RANOR

RANOR, INC

DIMENSIONAL INSPECTION REPORT

FORM QA 9.1 REV. 2 (4/1/96)

Customer: PROCESS SYSTEMS INTER	Level No.: 1C	Report No.: N/A
Part Description: 60 1/2" I.D. FLANGE (BSC) GROOVED	P.O. No. 555822-00	S.O. No. 7300 F/M
Drawing No. & Rev. V049-4-019 REV-3	Serial No. 7300-11	Sheet 1 con't 2 Rev.: —

Item No.	Drawing Dimension and Tolerances	Drawing Zone	Actual Dimension	Instrument Serial No.	Ref. / NCR Information	Sign Off
1	1.38 $^{+.13}_{-.00}$	B-1	1.456-1.458	M12QCI		RRG 689 RANOR 11-13-96
2	125	B-1	50	PS01QCI		11-5-96
3	63	C-1	54	PS01QCI		RRG 689 RANOR 11-13-96
4	⏥ | .010 |	C-1	0.003	VC-1		KJC 681 RANOR
5	1.00	C-3	1.003-1.005	M12QCI		RRG 689 RANOR 11-13-96
6	Ø 60.50 $^{+.03}_{-.00}$	B-3	60.484	IM45 2A IM45 2BQCI		TYP.
7	63	B-3	63 MAX	VISUAL		
8	Ø 61.40 $^{+.03}_{-.00}$	B-3	61.408	IM45 2BQCI		11-5-96
9	0.015 RAD	B-3	0.015	RG8QCI		KJC 681 RANOR
10	0.06 RAD	C-3	0.06	RG8QCI		RRG 689 RANOR 11-13-96
11	Ø 62.38	C-3	62.384	DV12QCI		TYP.
12	Ø 63.75	C-3	63.752	DV12QCI		
13	⌶ 0.50	C-2	0.500	DM06QCI		
14	0.03 RAD MAX TYP	C-4	0.03	RG8QCI		
15	Ø 61.25	C-3	61.252	DV12QCI		
16	0.335 - 0.340	DETAIL-D B-4	0.336	PGS2QCI		
17	0.206 - 0.214		0.209	DM06QCI		
18	32 C ± 8RMS		38	PS01QCI		
19	Ø 64.25	C-2	64.250	DV12QCI		
20	0.335 - 0.340	DETAIL-D B-4	0.336	PGS2QCT		
21	0.206 - 0.214		0.209	DM06QCI		
22	32 C ± 8RMS		29	PS01QCI		
23	63		63 MAX	VISUAL		
24	RAD $^{0.020}_{0.035}$ TYP		0.030	RG8QCI		
25	75° TYP		75°	VP1QCI		
26	63 TYP		63 MAX	VISUAL		

RANOR, INC

DIMENSIONAL INSPECTION REPORT

FORM QA 9.1 REV. 2 (4/1/96)

Customer: PROCESS SYSTEM INTER	Level No.: 1C	Report No.: N/A
Part Description: 60 1/2 I.D. FLANGE (BSC) GROOVED	P.O. No. 555822-00	S.O. No. 7300 F/M
Drawing No. & Rev. V049-4-019 REV-3	Serial No. 7300-11	Sheet 2 con't Rev.: —

Item No.	Drawing Dimension and Tolerances	Drawing Zone	Actual Dimension	Instrument Serial No.	Ref. / NCR Information	Sign Off
27	BREAK ALL EDGES (.005 R)	C-4	O.K.	VISUAL		[illegible] 11-13-96
28	60° 6X DETAIL C	C-6	60°	DVIZQCI		KJC 661 1-6-97 RANOR
29	0.25	D-5	0.245			
30	0.50	D-5	0.49			
31	BREAK ALL EDGES (.005 R)	D-3	OK	VISUAL		
32	↧ 0.146 - 0.156	C-5	0.150	DMDGQCI		
33	↧ 0.080 - 0.156	C-3	0.123			
34	BREAK ALL EDGES (.005 R)	C-3	OK	VISUAL		
35	Ø 1.00 30X	D-5	1.008	DVIZQCI		
36	66.250 B.C.	D-5	66.25			
37	6.0°	D-6	6.0°			
38	12.0°	D-6	12.0°			
39	48°	D-7	48°			
40	Ø 5/8 THRU	D-2	0.627			
41	0.76 C'BORE		0.76			
42	↧ 1/8		1/8			
43	31.531 RAD		31.527			
44	45°		45°			
45	1/8"		1/8			
46	68.50 O.D. REF	C-2	68 1/2	TAPE		
47	SCRIBE & STAMP 0°	B-2	OK	VISUAL		
48	SCRIBE S/N.	—	OK	VISUAL		[illegible] 11-5-96

RANOR, INC

DIMENSIONAL INSPECTION REPORT

FORM QA 9.1 REV. 2 (4/1/96)

Customer: PROCESS SYSTEMS INTER	Level No.: 1C	Report No.: N/A
Part Description: 60 1/2" I.D. FLANGE (BSC) GROOVED	P.O. No. 555822-00	S.O. No. 7300 F/M
Drawing No. & Rev. V049-4-019 REV-3	Serial No. 7300-12	Sheet 1 con't 2 Rev.: —

Item No.	Drawing Dimension and Tolerances	Drawing Zone	Actual Dimension	Instrument Serial No.	Ref. / NCR Information	Sign Off
1	1.38 +.13 −.00	B-1	1.452–1.455	M12QCI		RRG 689 11-13-96 RANOR
2	125	B-1	50-43	PS01QCI		11-5-96
3	63	C-1	46	PS01QCI		RRG 689 11-13-96 RANOR
4	⏥ | .010 |	C-1	0.003	VC-1		KJC 661 RANOR
5	1.00	C-3	1.006-1.009	M12QCI		RRG 689 11-13-96 RANOR
6	Ø 60.50 −.03 −.08	B-3	60.485	IM452A IM452BQCI		TYP.
7	63	B-3	63 MAX	VISUAL		
8	Ø 61.40 +.03 −.00	B-3	61.4095	IM452BQCI		11-5-96
9	0.015 RAD	B-3	0.015	RG8QCI		KJC 661 RANOR
10	0.06 RAD	C-3	0.06	RG8QCI		RRG 689 11-13-96 RANOR
11	Ø 62.38	C-3	62.387	DV12QCI		TYP.
12	Ø 63.75	C-3	63.749	DV12QCI		
13	↧ 0.50	C-2	0.496	DM06QCI		
14	0.03 RAD MAX TYP	C-4	0.03	RG8QCI		
15	Ø 61.25	C-3	61.255	DV12QCI		
16	0.335 - 0.340	DETAIL-D B-4	0.335	PGS2QCI		
17	0.206 - 0.214		0.206	DM06QCI		
18	32 C ± 8RMS		36	PS01QCI		
19	Ø 64.25	C-2	64.253	DV12QCI		
20	0.335 - 0.340	DETAIL-D B-4	0.336 - 0.337	PGS2QCI		
21	0.206 - 0.214		0.206 - 0.207	DM06QCI		
22	32 C ± 8RMS		30	PS01QCI		
23	63		63 MAX	VISUAL		
24	RAD 0.020 0.035 TYP		0.030	RG8QCI		
25	75° TYP		75°	VP1QCI		
26	63 TYP		63 MAX	VISUAL		

RANOR, INC

DIMENSIONAL INSPECTION REPORT

FORM QA 9.1 REV. 2 (4/1/96)

Customer: PROCESS SYSTEM INTER	Level No.: 1C	Report No.: N/A
Part Description: 60 1/2 I.D. FLANGE (BSC) GROOVED	P.O. No. 555822-00	S.O. No. 7300 F/H
Drawing No. & Rev. V049-4-019 REV-3	Serial No. 7300-12	Sheet 2 con't Rev.: —

Item No.	Drawing Dimension and Tolerances	Drawing Zone	Actual Dimension	Instrument Serial No.	Ref. / NCR Information	Sign Off
27	BREAK ALL EDGES (.005 R)	C-4	O.K.	VISUAL		RRC 11-13-96 RANOR
28	60° 6X DETAIL C	C-6	60°	DVIZRCE		KJC 1-6-97 RANOR
29	0.25	D-5	0.246			
30	0.50	D-5	0.492			
31	BREAK ALL EDGES (.005 R)	D-3	OK	VISUAL		
32	⊥ 0.146 - 0.156	C-5	0.150	DM060CR		
33	⊥ 0.080 - 0.156	C-3	0.120	DM060CR		
34	BREAK ALL EDGES (.005 R)	C-3	OK	VISUAL		
35	Ø 1.00 30X	D-5	1.005	DVIZRCE		
36	66.250 B.C.	D-5	66.25			
37	6.0°	D-6	6.0°			
38	12.0°	D-6	12.0°			
39	48°	D-7	48°			
40	Ø 5/8 THRU	D-2	0.627			
41	0.76 C'BORE		0.76			
42	⊥ 1/8		1/8			
43	31.531 RAD		31.520			
44	45°		45°			
45	1/8"		1/8			
46	68.50 O.D. REF	C-2	68 1/2	TAPE		
47	SCRIBE & STAMP 0°	B-2	OK	VISUAL		
48	SCRIBE S/N.	—	OK	VISUAL		RRC 11-13-96

RANOR, INC

DIMENSIONAL INSPECTION REPORT

FORM QA 9.1 REV. 2 (4/1/96)

Customer: PROCESS SYSTEMS INTER	Level No.: 1C	Report No.: N/A
Part Description: 60 1/2" I.D. FLANGE (BSC) GROOVED	P.O. No. 555822-00	S.O. No. 7300 F/M
Drawing No. & Rev. V049-4-019 REV-3	Serial No. 7300-16	Sheet 1 con't 2 Rev.: —

Item No.	Drawing Dimension and Tolerances	Drawing Zone	Actual Dimension	Instrument Serial No.	Ref. / NCR Information	Sign Off
1	1.38 +.13 −.00	B-1	1.454-1.456	DV062QC-2		
2	125 ✓	B-1	125 MAX	VISUAL		RRG GBS RANOR 11-5-96
3	63 ✓	C-1	42	PS01QC		11-12-96
4	▱ | .010 |	C-1	@ 0.003	VC-1		
5	1.00	C-3	1.00	DV062QC		
6	Ø 60.50 +.03 −.00	B-3	60.489	IM452QC IM452A		11-12-96
7	63 ✓	B-3	63 MAX	VISUAL		
8	Ø 61.40 +.03 −.00	B-3	61.403	IM452BQCI		RRG GBS RANOR 11-5-96
9	0.015 RAD	B-3	0.015	RG8QC		
10	0.06 RAD	C-3	0.06	RG1QC		11-12-96
11	Ø 62.38	C-3	62.383	DV062QC		
12	Ø 63.75	C-3	63.747	DV062QC		
13	⌶ 0.50	C-2	0.505	DM65QC		
14	0.03 RAD MAX TYP	C-4	0.03	RG1QC		
15	Ø 61.25	C-3	61.249	DV062QC		
16	0.335 - 0.340	DETAIL-D B-4	OK TO GAGE	PG52QC		
17	0.206 - 0.214	↓	0.207	DM65QC		
18	32 √C ± 8RMS	↓	30	PS01QC		
19	Ø 64.25	C-2	64.247	DV062QC		
20	0.335 - 0.340	DETAIL-D B-4	OK TO GAGE	PG52QC		
21	0.206 - 0.214	↓	0.206	DM65QC		
22	32 √C ± 8RMS	↓	24	PS01QC		
23	63 ✓	↓	63 MAX	VISUAL		
24	RAD 0.020 0.035 TYP	↓	0.03	RG1QC		
25	75° TYP	↓	75°	VP1QC		
26	63 ✓ TYP	↓	63 MAX	VISUAL		↓

RANOR, INC

DIMENSIONAL INSPECTION REPORT

FORM QA 9.1 REV. 2 (4/1/96)

Customer: PROCESS SYSTEM INTER	Level No.: 1C	Report No.: N/A
Part Description: 60 1/2 I.D. FLANGE (BSC) GROOVED	P.O. No. 555822-00	S.O. No. 7300 F/M
Drawing No. & Rev. V049-4-019 REV-3	Serial No. 7300-16	Sheet 2 con't Rev.: —

Item No.	Drawing Dimension and Tolerances	Drawing Zone	Actual Dimension	Instrument Serial No.	Ref. / NCR Information	Sign Off
27	BREAK ALL EDGES (.005 R)	C-4	OK	VISUAL		
28	60° 6X DETAIL C	C-6	60°	DIAL GAGE		
29	0.25	D-5	0.250			
30	0.50	D-5	0.500			
31	BREAK ALL EDGES (.005 R)	D-3	OK	VISUAL		
32	↧ 0.146 - 0.156	C-5	0.150	DIAL GAGE		
33	↧ 0.080 - 0.156	C-3	0.118			
34	BREAK ALL EDGES (.005 R)	C-3	OK	VISUAL		
35	Ø 1.00 30X	D-5	1.005	DIAL GAGE		
36	66.250 B.C.	D-5	66.25	DIAL GAGE		
37	6.0°	D-6	6°			
38	12.0°	D-6	12°			
39	48°	D-7	48°			
40	Ø 5/8 THRU	D-2	0.628			
41	0.76 C'BORE		0.76			
42	↧ 1/8		1/8			
43	31.531 RAD		31.524			
44	45°		45°			
45	1/8"		1/8			
46	68.50 O.D. REF	C-2	68 1/2	TAPE		
47	SCRIBE & STAMP 0°	B-2	—	—	—	
48	SCRIBE S/N.	—	O.K.	VISUAL		RNC 11-5-96

7300 5/1

RAMOR, INC LEV 1E BILL OF MATERIAL

FORM QA 4.1
REV. 1 (6/22/90)

DUE DATE AS NOTED ON P.O.

CUSTOMER PROCESS SYS. INT DRAWING NO. V049-4-001 UNITS REQUIRED 20 SHEET 1 OF 1

JOB NO. PART DESCRIPTION 60" PORTS PREPARED BY DRB Q.C. APPROVAL

ITEM NO.	QUANTITY	MATERIAL SPECIFICATION	THICKNESS	SIZE	LEV	SKETCH	SHEAR	SAW	THERMAL CUTTING	BEVEL	PRE-MACH.	FORM	COMMENTS	MATERIAL S-P-C	HEAT NUMBER
12	1/20	304L SS	1/2"	27 11/16 X 191.69		7			DNC ✓	—	—	—	6 PCS	C	39734-1A
															[redacted]
															[redacted]
									✓				7 PCS CUT		39734-4A
									✓				7 Pcs. CUT		39734-5A
				RECORD ALL									1 PC. EXTRA		39734-1A
				PLATE HEAT #'S									TEMP CUT		

39

RANOR, INC. SERIAL NO. _____

WELD MAP/WELD JOINT IDENTIFICATION SHEET

WELD MAP PAGE	CUSTOMER	CUST P.O.	JOB NO.	LEVEL NO.
1A CON'T 1B	PROCESS SYS. INT.		7300FM	1E

DESCRIPTION	MATERIAL
LIGO VACUMM CHAMBER 60" NOZZLES DWG. No. V049-4-003	T 304L SA 240

WELDING PROCESS: PAW GTAW

WELD PROCEDURES	G1	P-P8-P8-2 REV.0	T1	T-P8-P8-PSI REV.0	F1		M1		S1		
	G2		T2		F2		M2		S2		
	G3		T3		F3		M3		S3		
FILLER METAL											

PREPARED BY:	APPROVED BY:	W/M REV.
D.R.B. 9-16-96	N/A	_

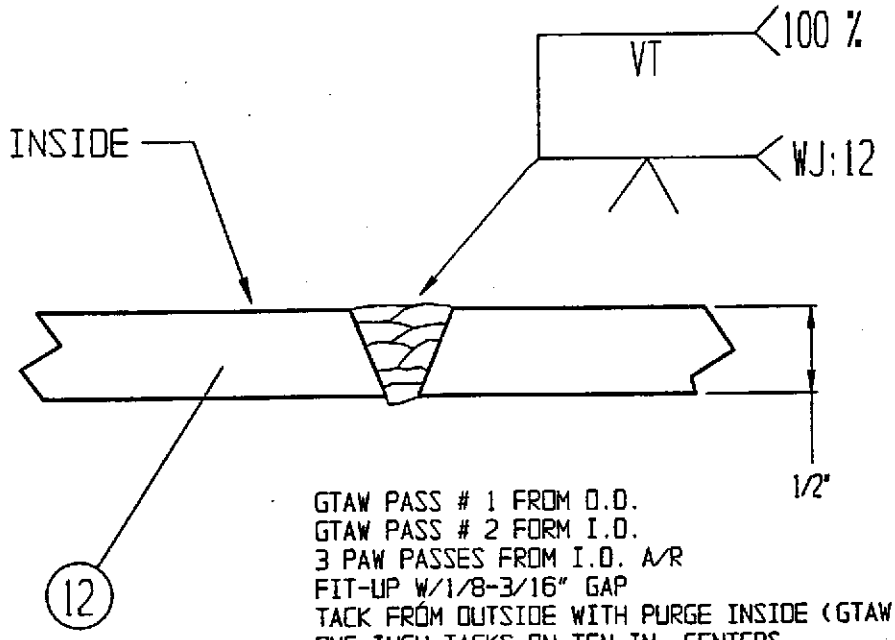

GTAW PASS # 1 FROM O.D.
GTAW PASS # 2 FORM I.D.
3 PAW PASSES FROM I.D. A/R
FIT-UP W/1/8-3/16" GAP
TACK FROM OUTSIDE WITH PURGE INSIDE (GTAW)
ONE INCH TACKS ON TEN IN. CENTERS
BACKSTEP WELD ROOT PASS FROM TACK TO TACK FROM OUTSIDE (TIG)
GTAW PASS FROM INSIDE (TIG)
FILL FROM I.D. A/R (PAW)

ASSEMBLY NUMBER	LOCATION NUMBER	WELD JOINT	TACKING RECORD			WELD JOINT RECORD			REPAIR RECORD		
			WELDER I.D.	FILLER METAL HEAT/LOT NO.	PROC.	WELDER I.D.	FILLER METAL HEAT/LOT NO.	PROC.	REPAIR WELDER	WELD REPAIR FILLER MET.	PROC.
1	1	WJ: 12	P	5705643	T1	P-W	5705643	P1 T1			
2	1	WJ: 12	W	5705643	T1	W	52046-46	P1 T1			
3	1	WJ: 12	P	AT6641	T1	W	52046-46	P1 T1			
4	1	WJ: 12	P	AT6641	T1	W	52046-46	P1 T1			
5	1	WJ: 12	W W	AT6641	T1	W	52046-46	P1 T1			
6	1	WJ: 12	W W	AT6641	T1	R R	CT6824	G1 T1			
7	1	WJ: 12	P	AT6641	T1	R R	CT6824	G1 T1			
8	1	WJ: 12	P	AT6641	T1	R R	CT6824	G1 T1			

RANOR, INC. SERIAL NO. _____

WELD MAP/WELD JOINT IDENTIFICATION SHEET

WELD MAP PAGE	CUSTOMER	CUST P.O.	JOB NO.	LEVEL NO.
1B CON'T 2	PROCESS SYSTEMS	555822-00	7300 F/M	1E

DESCRIPTION: 60" NOZZLES
DWG. No. V049-4-003

MATERIAL: 304L S/S

WELDING PROCESS: ~~GMAW~~ SAW GTAW FCAW SMAW SAW

WELD PROCEDURES										
	G1	P-P8-P8-2 Rev.0	T1	~~T-P8-P8-2 REV.0~~	F1		M1		S1	
	G2		T2	T-P8-P8-PSI REV.0	F2		M2		S2	
	G3		T3		F3		M3		S3	
FILLER METAL										

PREPARED BY: DJH 9-16-96 APPROVED BY: N/A W/M REV. –

ASSEMBLY NUMBER	LOCATION NUMBER	WELD JOINT	TACKING RECORD			WELD JOINT RECORD			REPAIR RECORD		
			WELDER I.D.	FILLER METAL HEAT/LOT NO.	PROC.	WELDER I.D.	FILLER METAL HEAT/LOT NO.	PROC.	REPAIR WELDER	WELD REPAIR FILLER MET.	PROC.
9	1	WJ:12	P	AT6641	T2	RR	CT6824	G1 T1			
10	1	WJ:12	P	AT6641	T2	RR	CT6824	G1 T1			
11	1	WJ:12	P	AT6641	T2	RR	CT6824	G1 T1			
12	1	WJ:12	P	AT6641	T2	RR	CT6824	G1 T1			
13	1	WJ:12	P	AT6641	T2	RR	CT6824	G1 T1			
14	1	WJ:12	P	AT6641	T2	RR	CT6824	G1 T1			
15	1	WJ:12	W	AT6641	T2	RR	CT6824	G1 T1			
16	1	WJ:12	P	AT6834	T2	K227B	S437221	T1 T2			
17	1	WJ:12	P	AT6834	T2	K227B	S437221	T1 T2			
18	1	WJ:12	P	AT6834	T2	K227B	S437221	T1 T2			
19	1	WJ:12	P	AT6834		K227B	S437221	T1 T2			
20	1	WJ:12	P	AT6834		K227B	S437221	T1 T2			

7300 F/M

RAMOR, INC — BILL OF MATERIAL

FORM QA 4.1 REV. 1 (6/22/90)

DUE DATE AS NOTED ON P.O.

CUSTOMER PROCESS SYSTEMS | DRAWING NO. V049-4-003 | UNITS REQUIRED 5 sets | SHEET 1 OF 1

JOB NO. 7300 F/M | PART DESCRIPTION LOWER SHELL MISC. PARTS | PREPARED BY DJH 9-19-96 | Q.C. APPROVAL

LEVEL # 1C

ITEM NO.	QUANTITY	MATERIAL SPECIFICATION	THICKNESS	SIZE	LEV	SKETCH	SHEAR	SAW	THERMAL CUTTING	BEVEL	PRE-MACH.	FORM	COMMENTS	MATERIAL S-P-C	HEAT NUMBER
5	5	304L	1½	112½ O.D. X 104¼ I.D. FORG.							DWG		DWG. NO. V049-4-022	C	
7	20	304L	1⅝	68½ O.D. X 60 I.D. FORG.							DWG		DWG. NO V049-4-019		
15	15	304L	BAR	3/8 x 4 F.B. X 144 RANDOM.		#1		—		—		F/O	FARMOUT ROLLING		
16	40	304L	¾	3⅞ x 24					✓				CUT FROM 20"x36" PL		Y1126
20	20	304L	½	12 x 12 ~~10~~ 12 PCS CUT		#2			✓		—	—	CUT FROM 59½ Ø DROPS		96985-1B 10 pcs 4631-2A — 10 pcs CUT
21A	60	304L	BAR	3/8 x 1½ F.B. X 8		#3		—		—	—				
21B	60	304L	BAR	3/8 x 1½ F.B. X 14		#4		—		—	—				
22	20	304L	BAR	¼ x 2½ F.B. x 4		#5		—		—	—				
51	10	304L	BAR	½ x 2 F.B. X 144 RANDOM		#6		—				F/O	FARM OUT ROLLING		
52	90	304L	BAR	3/8 x 2 F.B. X 2¼		#7	—			—					
55	40	304L	½	6½ x 8 ~~30~~ 40 CUT			—		✓				CUT FROM 59½ Ø DROPS	C	
				(THIS PART IS FLAT)									10 pcs.		39734-1A
													12 pcs.		39734-4A
													12 pcs.		39734-5A
													8 pcs		47804-5A

CS 2

RANOR, INC · SERIAL NO. 3

WELD MAP/WELD JOINT IDENTIFICATION SHEET

WELD MAP PAGE	CUSTOMER	CUST P.O.	JOB NO.	LEVEL NO.
1 CON'T 2	PROCESS SYSTEMS	555822-00	7300 F/M	1C

DESCRIPTION SUPPORT PAD SUBASSEMBLY
DWG. No. V049-4-003

MATERIAL 304L S/S

WELDING PROCESS:	GMAW	GTAW	FCAW	SMAW	SAW
WELD PROCEDURES	G1	T1 P-P8-P8-2 REV.0	F1	M1	S1
	G2	T2 T-P8-P8-PSI REV.0	F2	M2	S2
	G3	T3	F3	M3	S3
FILLER METAL					

PREPARED BY: DJH 9-16-96 | APPROVED BY: | W/M REV. -

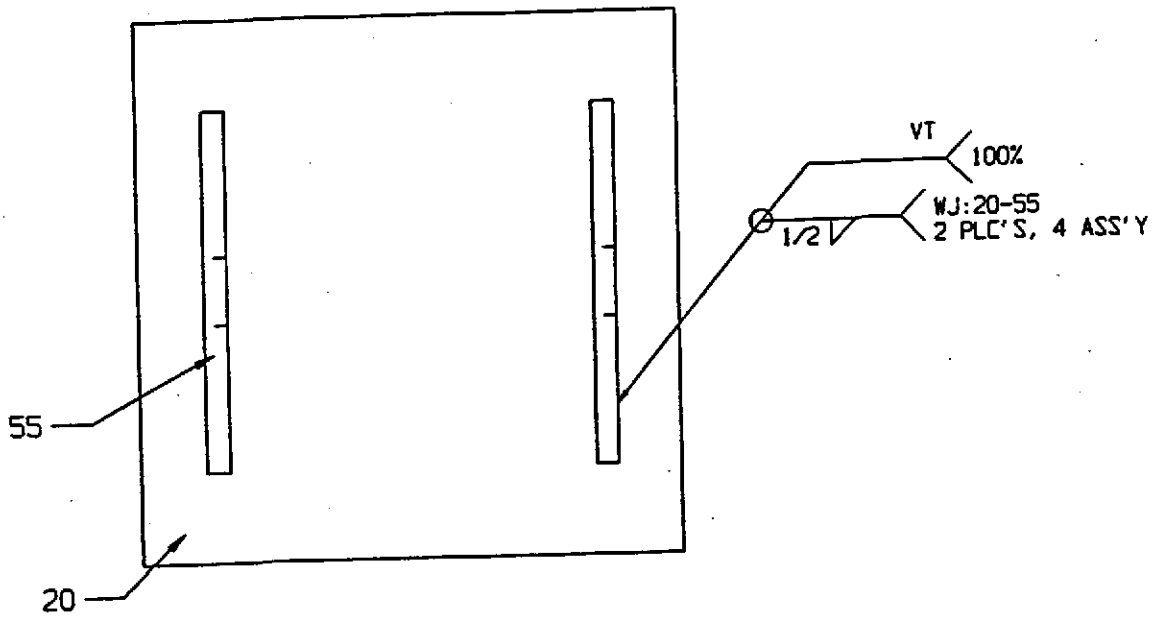

ASSEMBLY NUMBER	LOCATION NUMBER	WELD JOINT	TACKING RECORD WELDER I.D.	TACKING RECORD FILLER METAL HEAT/LOT NO.	TACKING RECORD PROC.	WELD JOINT RECORD WELDER I.D.	WELD JOINT RECORD FILLER METAL HEAT/LOT NO.	WELD JOINT RECORD PROC.	REPAIR RECORD REPAIR WELDER	REPAIR RECORD WELD REPAIR FILLER MET.	REPAIR RECORD PROC.
1	1	20-55	W	AT6834	T2	P	AT6834	T2			
1	2	20-55	W	AT6834	T2	P	AT6834	T2			
2	1	20-55	W	AT6834	T2	P	AT6834	T2			
2	2	20-55	W	AT6834	T2	P	AT6834	T2			
3	1	20-55	W	AT6834	T2	P	AT6834	T2			
3	2	20-55	W	AT6834	T2	P	AT6834	T2			
4	1	20-55	W	AT6834	T2	P	AT6834	T2			
4	2	20-55	W	AT6834	T2	P	AT6834	T2			

RANOR, INC Ser. No. 3 -

INSPECTION/NONDESTRUCTIVE EXAMINATION RECORD

WELD MAP	CUSTOMER:	CUSTOMER PO:	JOB NO.:	LEVEL NO.:
2 CONT. –	PROCESS SYSTEMS INT.	555822-00	7300 F/M	1C

DESCRIPTION:	MATERIAL:
SUPPORT PAD SUBASSEMBLY; DWG NO. V049-4-003	304L S/S

PREPARED BY	APPROVED BY:	WELD MAP REV.:
DJH 6-18-96	—	—

VISUAL EXAMINATION REPORT - PROCEDURE NO. RQCP-25, REV. 4

AREA EXAMINED:
☐ ROOT
☒ FINAL
☐ BEVELED EDGES

SURFACE CONDITION:
☒ AS-WELDED
☐ GROUND
☐ MACHINED

	WELD JOINT NUMBER	WJ:20-55 ASS'Y 1	WJ:20-55 ASS'Y 2	WJ:20-55 ASS'Y 3	WJ:20-55 ASS'Y 4
	NDE EXAMINER LEVEL DATE	MB II 2-4-97	MB II 2-4-97	MB II 2-4-97	MB II 2-4-97
	CUSTOMER QUALITY REP. DATE				
Cracks		None	None	None	None
Fusion		OK	OK	OK	OK
Crater Filled to Full Cross-section of Weld		—	—	—	—
Weld Profile		OK	OK	OK	OK
Undercut		None	None	None	None
Piping Porosity		None	None	None	None
Fillet Weld Size		OK	OK	OK	OK
Visual Indications After Repair		—	—	—	—
Final Weld Joint Acceptance		Accept	Accept	Accept	Accept

VISUAL EXAMINATION REPORT - PROCEDURE NO. RQCP-25, REV. 4

AREA EXAMINED:
☐ ROOT
☐ FINAL
☐ BEVELED EDGES

SURFACE CONDITION:
☐ AS-WELDED
☐ GROUND
☐ MACHINED

	WELD JOINT NUMBER									
	NDE EXAMINER LEVEL DATE									
	CUSTOMER QUALITY REP. DATE									
Cracks										
Fusion										
Crater Filled to Full Cross-section of Weld										
Weld Profile										
Undercut										
Piping Porosity										
Fillet Weld Size										
Visual Indications After Repair										
Final Weld Joint Acceptance										

NDE Examiner: [signature] Level: II Date: 2-4-97

7300FM

RALOR, INC

BILL OF MATERIAL

FORM QA 4.1
REV. 1 (6/22/90)

DUE DATE 2-2-97

CUSTOMER PROCESS SYSTEMS | DRAWING NO. V049-4-003 | UNITS REQUIRED 1 | SHEET 1 OF 1

JOB NO. 7300 FM | PART DESCRIPTION LOWER SHELL ASS'Y. | PREPARED BY DJH 9-20-96 | Q.C. APPROVAL

UNIT #3

LEVEL # 1

ITEM NO.	QUANTITY	MATERIAL SPECIFICATION	THICKNESS	SIZE	LEV	SKETCH	SHEAR	SAW	THERMAL CUTTING	BEVEL	PRE-MACH.	FORM	RECORD SERIAL #'S COMMENTS	MATERIAL S-P-C	HEAT NUMBER
3	1	304LS/S		BOTTOM SHELL	1A										96985-1A
1	1	304LS/S		BOTTOM HEAD	1B										V0796-1C-SH2 40
		304LS/S		MISC. ASS'Y. PARTS	1C										
9	6	304LS/S		"E-PORTS" FLANGE ASS'Y.	1D										
10	6			"F-PORTS" FLANGE ASS'Y.	1D										
11	12			"G-PORTS" FLANGE ASS'Y.	1D										
12	4			60" PORTS	1E										
13	4			"D-PORTS" FLANGE ASS'Y.	1D										

(13)

RANOR, INC · SERIAL NO. 3

WELD MAP/WELD JOINT IDENTIFICATION SHEET

WELD MAP PAGE	CUSTOMER	CUST P.O.	JOB NO.	LEVEL NO.
1 CON'T 2	PROCESS SYSTEMS	555822-00	7300 F/M	1

DESCRIPTION **LOWER SHELL SUBASSEMBLY**
DWG. No. V049-4-003

MATERIAL 304L S/S

WELDING PROCESS:	GMAW		GTAW		FCAW		SMAW		SAW	
WELD PROCEDURES	G1		T1	P-P8-P8-2 REV.0	F1		M1		S1	
	G2		T2	T-P8-P8-PSI REV.0	F2		M2		S2	
	G3		T3		F3		M3		S3	
FILLER METAL										

PREPARED BY: DJH 9-16-96 | APPROVED BY: — | W/M REV. A 10-3-96

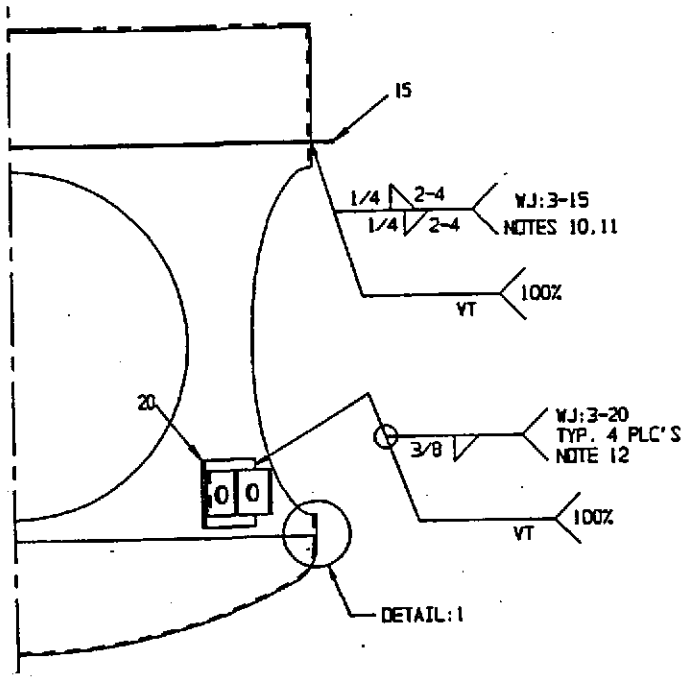

WELDING NOTES:
1. GTAW PASS #1 FROM THE O.D.
2. GTAW PASS #2 FROM THE I.D.
3. PAW PASSES FROM THE I.D. AS REQUIRED.
4. FIT-UP WITH 1/8 TO 3/16 GAP
5. TACK FROM OUTSIDE WITH PURGE INSIDE (GTAW)
6. ONE INCH TACKS ON TEN INCH CENTERS.
7. BACKSTEP WELD ROOT PASS FROM TACK TO TACK FROM OUTSIDE (TIG)
8. GTAW PASS FROM INSIDE (TIG)
9. FILL FROM I.D. AS REQUIRED (PAW)
10. TACK BOTH SIDES (PAW)
11. WELD BOTH SIDES ALTERNATING; END WELDS ON TACKS (PAW)
12. PAW WELD AS REQUIRED.

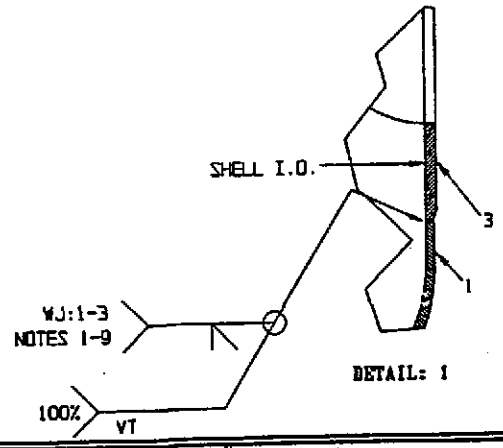

ASSEMBLY NUMBER	LOCATION NUMBER	WELD JOINT	TACKING RECORD WELDER I.D.	TACKING RECORD FILLER METAL HEAT/LOT NO.	TACKING RECORD PROC.	WELD JOINT RECORD WELDER I.D.	WELD JOINT RECORD FILLER METAL HEAT/LOT NO.	WELD JOINT RECORD PROC.	REPAIR RECORD REPAIR WELDER	REPAIR RECORD WELD REPAIR FILLER MET.	REPAIR RECORD PROC.
1	1	3-20	W	AT6834	T2	W	S716840	T1			
1	2	3-20	W	AT6834	T2	W	S716840	T1			
1	3	3-20	LL	S716840	T2	LL/W	S716840	T2			
1	4	3-20	LL	S716840	T2	LL/W	S716840	T2			
1	1	1-3	W	CT6842	T2	P/LL	AT6824	T2			
1	1	3-15	W	S710840	T2	LL	S710840	T2/T1			
		1-3	—	—	—	P/LL	S2046-46	T1			

RANOR, INC · SERIAL NO. 3

WELD MAP/WELD JOINT IDENTIFICATION SHEET

WELD MAP PAGE	CUSTOMER	CUST P.O.	JOB NO.	LEVEL NO.
2 CON'T 3	PROCESS SYSTEMS	555822-00	7300 F/M	1

DESCRIPTION	MATERIAL
LOWER SHELL SUBASSEMBLY DWG. No. V049-4-003	304L S/S

WELDING PROCESS:	GMAW	GTAW	FCAW	SMAW	SAW
WELD PROCEDURES	G1	T1 P-P8-P8-2 REV.0	F1	M1	S1
	G2	T2 T-P8-P8-PSI REV.0	F2	M2	S2
	G3	T3	F3	M3	S3
FILLER METAL					

PREPARED BY:	APPROVED BY:	W/M REV.
DJH 9-16-96		

WELDING NOTES:
1. GTAW TACK OUTSIDE
2. GTAW WELD INSIDE
3. PAW STICH WELD OUTSIDE AS REQUIRED.

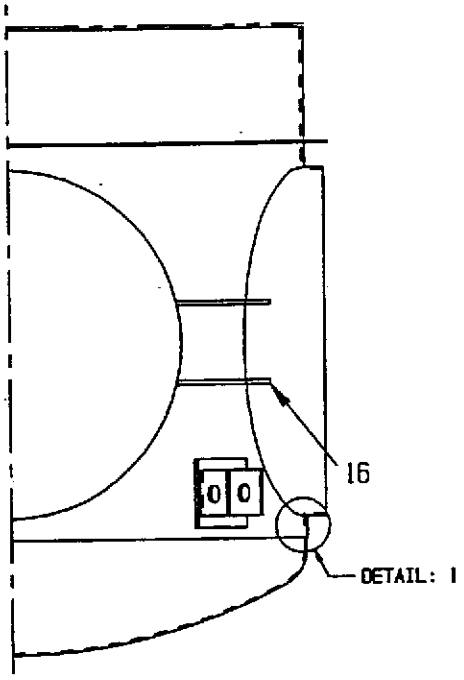

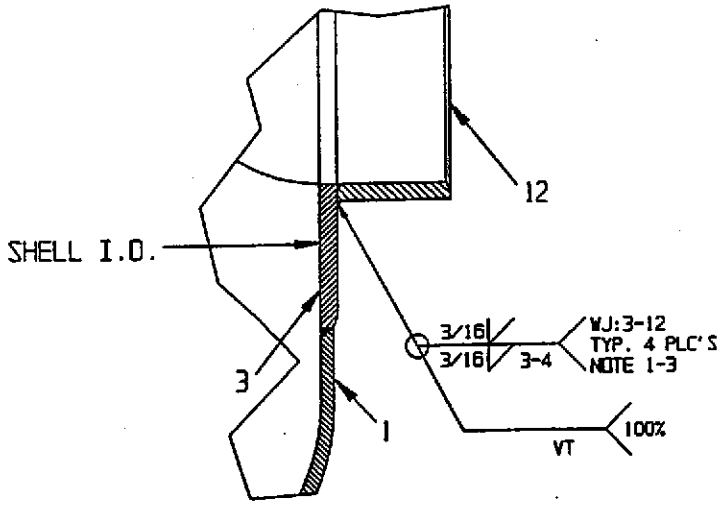

DETAIL: 1

ASSEMBLY NUMBER	LOCATION NUMBER	WELD JOINT	TACKING RECORD: WELDER I.D.	TACKING RECORD: FILLER METAL HEAT/LOT NO.	TACKING RECORD: PROC.	WELD JOINT RECORD: WELDER I.D.	WELD JOINT RECORD: FILLER METAL HEAT/LOT NO.	WELD JOINT RECORD: PROC.	REPAIR RECORD: REPAIR WELDER	REPAIR RECORD: WELD REPAIR FILLER MET.	REPAIR RECORD: PROC.
1	1	3-12	W	5710840	T2	P/W	AT6028	T2			
1	2	3-12	W	5710840	T2	P/W	AT6028	T2			
1	3	3-12	W	5710840	T2	P/W	AT6028	T2			
1	4	3-12	W	5710840	T2	P/W	AT6028	T2			

RANOR, INC · SERIAL NO. 3

WELD MAP/WELD JOINT IDENTIFICATION SHEET

WELD MAP PAGE	CUSTOMER	CUST P.O.	JOB NO.	LEVEL NO.
3 CON'T 4	PROCESS SYSTEMS	555822-00	7300 F/M	1

DESCRIPTION: LOWER SHELL SUBASSEMBLY
DWG. No. V049-4-003

MATERIAL: 304L S/S

WELDING PROCESS:	GMAW	GTAW	FCAW	SMAW	SAW
WELD PROCEDURES	G1	T1 P-P8-P8-2 REV.0	F1	M1	S1
	G2	T2 T-P8-P8-PSI REV.0	F2	M2	S2
	G3	T3	F3	M3	S3
FILLER METAL					

PREPARED BY: DJH 9-16-96 | APPROVED BY: ——— | W/M REV. _

WELDING NOTES:
1. TACK BOTH SIDES (PAW)
2. WELD BOTH SIDES ALTERNATING; END WELDS ON TACKS (PAW)

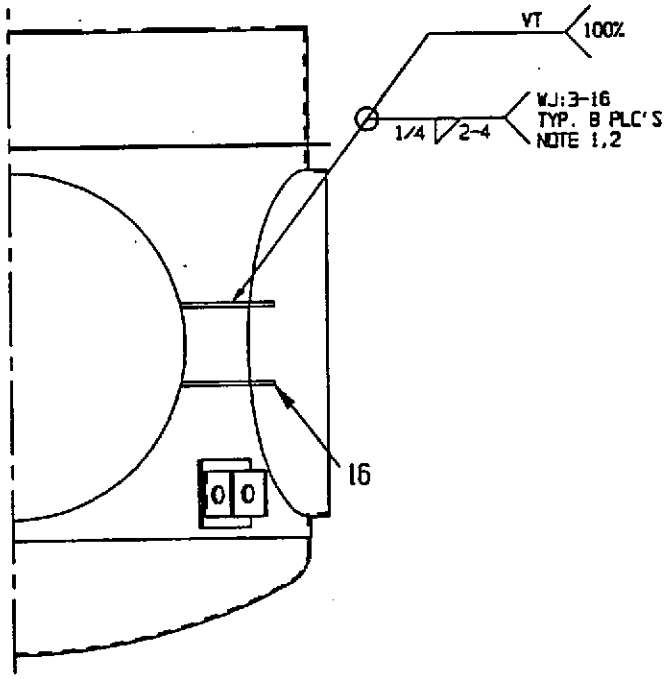

ASSEMBLY NUMBER	LOCATION NUMBER	WELD JOINT	TACKING RECORD: WELDER I.D.	TACKING RECORD: FILLER METAL HEAT/LOT NO.	TACKING RECORD: PROC.	WELD JOINT RECORD: WELDER I.D.	WELD JOINT RECORD: FILLER METAL HEAT/LOT NO.	WELD JOINT RECORD: PROC.	REPAIR RECORD: REPAIR WELDER	REPAIR RECORD: WELD REPAIR FILLER MET.	REPAIR RECORD: PROC.
1	1	3-16	W	5710840	T2	P/W	AT6028	T1			
1	2	3-16	W	5710840	T2	P/W	AT6028	T1			
1	3	3-16	W	5710840	T2	P/W	AT6028	T1			
1	4	3-16	W	5710840	T2	P/W	AT6028	T1			
1	5	3-16	W	5710840	T2	P/W	AT6028	T1			
1	6	3-16	W	5710840	T2	P/W	AT6028	T1			
1	7	3-16	W	5710840	T2	P/W	AT6028	T1			
1	8	3-16	W	5710840	T2	P/W	AT6028	T1			

RANOR, INC

SERIAL NO. 3

WELD MAP/WELD JOINT IDENTIFICATION SHEET

WELD MAP PAGE	CUSTOMER	CUST P.O.	JOB NO.	LEVEL NO.
4A CON'T 4B	PROCESS SYSTEMS	555822-00	7300 F/M	1

DESCRIPTION	MATERIAL
LOWER SHELL SUBASSEMBLY DWG. No. V049-4-003	304L S/S

WELDING PROCESS:	GMAW		GTAW		FCAW		SMAW		SAW	
WELD PROCEDURES	G1		T1	P-P8-P8-2 REV.0	F1		M1		S1	
	G2		T2	T-P8-P8-PSI REV.0	F2		M2		S2	
	G3		T3		F3		M3		S3	
FILLER METAL										

PREPARED BY:	APPROVED BY:	W/M REV.
DJH 9-16-96	—	—

WELDING NOTES:
1. GTAW WELD FROM BEVEL SIDE
2. GTAW WASH BACKSIDE AS REQUIRED.

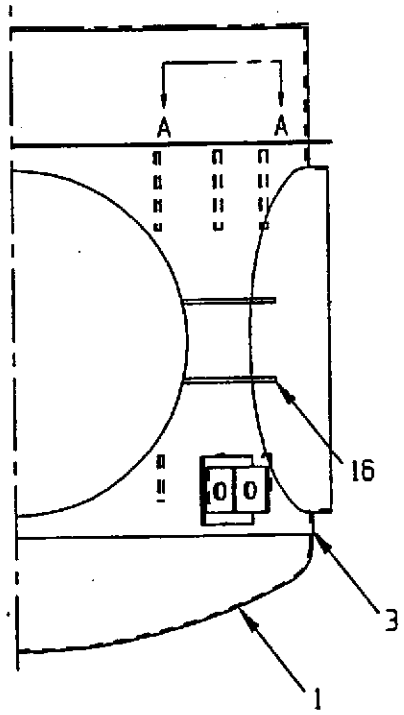

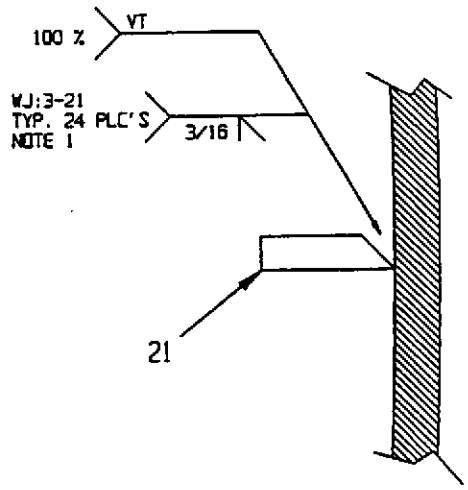

SECTION A-A

ASSEMBLY NUMBER	LOCATION NUMBER	WELD JOINT	TACKING RECORD			WELD JOINT RECORD			REPAIR RECORD		
			WELDER I.D.	FILLER METAL HEAT/LOT NO.	PROC.	WELDER I.D.	FILLER METAL HEAT/LOT NO.	PROC.	REPAIR WELDER	WELD REPAIR FILLER MET.	PROC.
1	1	3-21	W	AT6834	T2	W	AT6834	T2			
1	2	3-21	W	AT6834	T2	W	AT6834	T2			
1	3	3-21	W	AT6834	T2	W	AT6834	T2			
1	4	3-21	W	AT6834	T2	W	AT6834	T2			
1	5	3-21	W	AT6834	T2	W	AT6834	T2			
1	6	3-21	W	AT6834	T2	W	AT6834	T2			
1	7	3-21	W	AT6834	T2	W	AT6834	T2			
1	8	3-21	W	AT6834	T2	W	AT6834	T2			

RANOR, INC · SERIAL NO. 3

WELD MAP/WELD JOINT IDENTIFICATION SHEET

WELD MAP PAGE	CUSTOMER	CUST P.O.	JOB NO.	LEVEL NO.
4B CON'T 5	PROCESS SYSTEMS	555822-00	7300 F/M	1

DESCRIPTION **LOWER SHELL ASSEMBLY**
OWG. No. V049-4-003

MATERIAL 304L S/S

WELDING PROCESS:	GMAW		GTAW		FCAW		SMAW		SAW	
WELD PROCEDURES	G1		T1	P-P8-P8-2 REV.0	F1		M1		S1	
	G2		T2	T-P8-P8-PSI REV.0	F2		M2		S2	
	G3		T3		F3		M3		S3	
FILLER METAL										

PREPARED BY: DJH 9-16-96 | APPROVED BY: — | W/M REV. —

ASSEMBLY NUMBER	LOCATION NUMBER	WELD JOINT	TACKING RECORD			WELD JOINT RECORD			REPAIR RECORD		
			WELDER I.D.	FILLER METAL HEAT/LOT NO.	PROC.	WELDER I.D.	FILLER METAL HEAT/LOT NO.	PROC.	REPAIR WELDER	WELD REPAIR FILLER MET.	PROC.
1	9	3-21	W	AT6834	T2	W	AT6834	T2			
1	10	3-21	W	AT6834	T2	W	AT6834	T2			
1	11	3-21	W	AT6834	T2	W	AT6834	T2			
1	12	3-21	W	AT6834	T2	W	AT6834	T2			
1	13	3-21	W	AT6834	T2	WW/W	AT6834	T2			
1	14	3-21	W	AT6834	T2	WW/W	AT6834	T2			
1	15	3-21	W	AT6834	T2	W	AT6834	T2			
1	16	3-21	W	AT6834	T2	W	AT6834	T2			
1	17	3-21	W	AT6834	T2	W	AT6834	T2			
1	18	3-21	W	AT6834	T2	W	AT6834	T2			
1	19	3-21	W	AT6834	T2	W	AT6834	T2			
1	20	3-21	W	AT6834	T2	W	AT6834	T2			
1	21	3-21	W	AT6834	T2	W	AT6834	T2			
1	22	3-21	W	AT6834	T2	W	AT6834	T2			
1	23	3-21	W	AT6834	T2	W	AT6834	T2			
1	24	3-21	W	AT6834	T2	W	AT6834	T2			

RANOR, INC · SERIAL NO. 3

WELD MAP/WELD JOINT IDENTIFICATION SHEET

WELD MAP PAGE	CUSTOMER	CUST P.O.	JOB NO.	LEVEL NO.
5A CON'T 5B	PROCESS SYSTEMS	555822-00	7300 F/M	1

DESCRIPTION	MATERIAL
LOWER SHELL SUBASSEMBLY DWG. No. V049-4-003	304L S/S

WELDING PROCESS:	GMAW	GTAW	FCAW	SMAW	SAW
WELD PROCEDURES	G1	T1 P-P8-P8-2 REV.0	F1	M1	S1
	G2	T2 T-P8-P8-PSI REV.0	F2	M2	S2
	G3	T3	F3	M3	S3
FILLER METAL					

PREPARED BY:	APPROVED BY:	W/M REV.
DJH 9-16-96		-

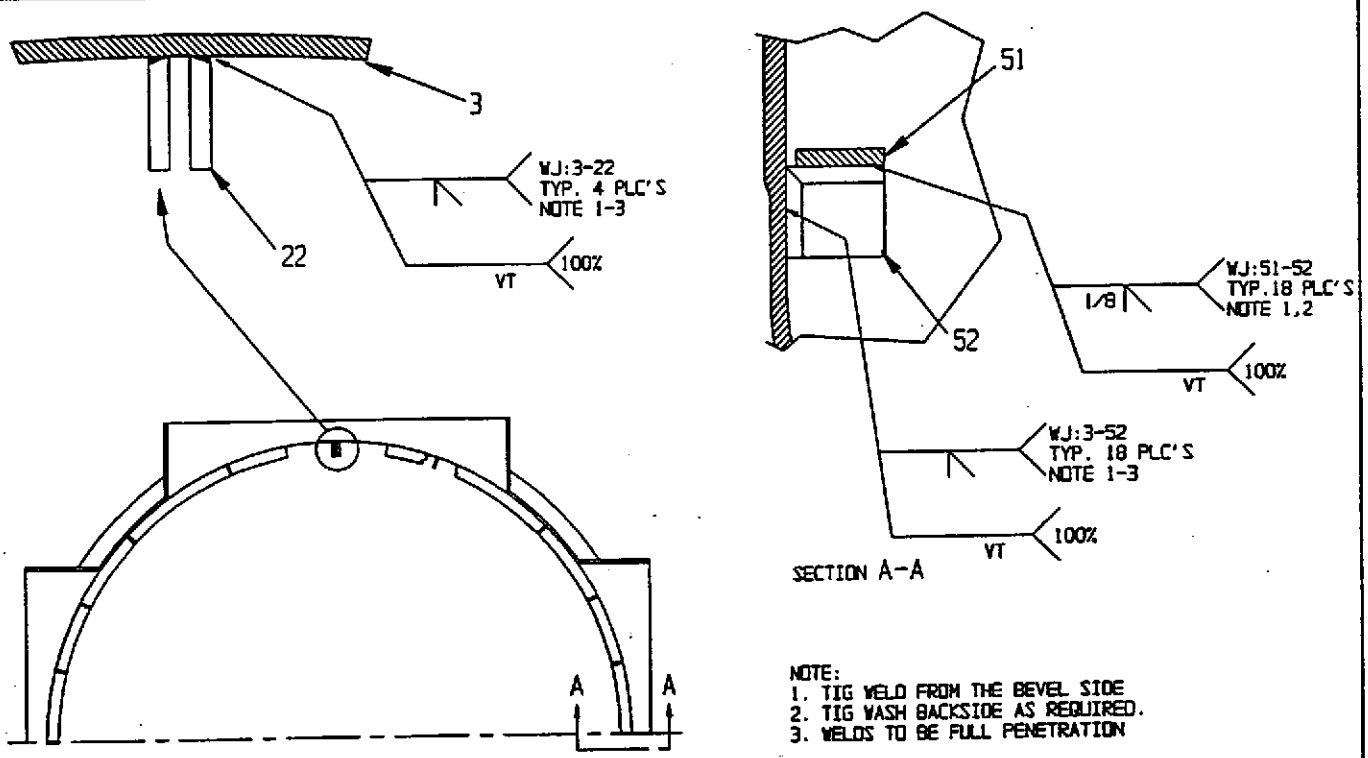

NOTE:
1. TIG WELD FROM THE BEVEL SIDE
2. TIG WASH BACKSIDE AS REQUIRED.
3. WELDS TO BE FULL PENETRATION

ASSEMBLY NUMBER	LOCATION NUMBER	WELD JOINT	TACKING RECORD WELDER I.D.	TACKING RECORD FILLER METAL HEAT/LOT NO.	TACKING RECORD PROC.	WELD JOINT RECORD WELDER I.D.	WELD JOINT RECORD FILLER METAL HEAT/LOT NO.	WELD JOINT RECORD PROC.	REPAIR RECORD REPAIR WELDER	REPAIR RECORD WELD REPAIR FILLER MET.	REPAIR RECORD PROC.
1	1	3-22	W	AT6028	T2	W	AT6028	T2			
1	2	3-22	W	AT6028	T2	W	AT6028	T2			
1	3	3-22	W	AT6028	T2	W	AT6028	T2			
1	4	3-22	W	AT6028	T2	W	AT6028	T2			
1	1	3-52	W	AT6028	T2	W	AT6028	T2			
1	2	3-52	W	AT6028	T2	W	AT6028	T2			
1	3	3-52	W	AT6028	T2	W	AT6028	T2			
1	4	3-52	W	AT6028	T2	W	AT6028	T2			

RANOR, INC · SERIAL NO. 3

WELD MAP/WELD JOINT IDENTIFICATION SHEET

WELD MAP PAGE	CUSTOMER	CUST P.O.	JOB NO.	LEVEL NO.
5B CON'T 5C	PROCESS SYSTEMS	555822-00	7300 F/M	1

DESCRIPTION LOWER SHELL ASSEMBLY
DWG. No. V049-4-003

MATERIAL 304L S/S

WELDING PROCESS:	GMAW		GTAW		FCAW		SMAW		SAW	
WELD PROCEDURES	G1		T1	P-P8-P8-2 REV.0	F1		M1		S1	
	G2		T2	T-P8-P8-PSI REV.0	F2		M2		S2	
	G3		T3		F3		M3		S3	
FILLER METAL										

PREPARED BY: DJH 9-16-96 APPROVED BY: — W/M REV. —

ASSEMBLY NUMBER	LOCATION NUMBER	WELD JOINT	TACKING RECORD			WELD JOINT RECORD			REPAIR RECORD		
			WELDER I.D.	FILLER METAL HEAT/LOT NO.	PROC.	WELDER I.D.	FILLER METAL HEAT/LOT NO.	PROC.	REPAIR WELDER	WELD REPAIR FILLER MET.	PROC.
1	5	3-52	W	AT6028	T2	W	AT6028	T2			
1	6	3-52	W	AT6028	T2	W	AT6028	T2			
1	7	3-52	W	AT6028	T2	W	AT6028	T2			
1	8	3-52	W	AT6028	T2	W	AT6028	T2			
1	9	3-52	W	AT6028	T2	W	AT6028	T2			
1	10	3-52	W	AT6028	T2	W	AT6028	T2			
1	11	3-52	W	AT6028	T2	W	AT6028	T2			
1	12	3-52	W	AT6028	T2	W	AT6028	T2			
1	13	3-52	W	AT6028	T2	W	AT6028	T2			
1	14	3-52	W	AT6028	T2	W	AT6028	T2			
1	15	3-52	W	AT6028	T2	W	AT6028	T2			
1	16	3-52	W	AT6028	T2	W	AT6028	T2			
1	17	3-52	W	AT6028	T2	W	AT6028	T2			
1	18	3-52	W	AT6028	T2	W	AT6028	T2			
1	1	51-52	P	AT6028	T2	P	AT6028	T2			
1	2	51-52	P	AT6028	T2	P	AT6028	T2			
1	3	51-52	P	AT6028	T2	P	AT6028	T2			
1	4	51-52	P	AT6028	T2	P	AT6028	T2			
1	5	51-52	P	AT6028	T2	P	AT6028	T2			
1	6	51-52	P	AT6028	T2	P	AT6028	T2			
1	7	51-52	P	AT6028	T2	P	AT6028	T2			
1	8	51-52	P	AT6028	T2	P	AT6028	T2			
1	9	51-52	P	AT6028	T2	P	AT6028	T2			
1	10	51-52	P	AT6028	T2	P	AT6028	T2			
1	11	51-52	P	AT6028	T2	P	AT6028	T2			

RANOR, INC · SERIAL NO. 3

WELD MAP/WELD JOINT IDENTIFICATION SHEET

WELD MAP PAGE	CUSTOMER	CUST P.O.	JOB NO.	LEVEL NO.
5C CON'T 6	PROCESS SYSTEMS	555822-00	7300 F/M	1

DESCRIPTION **LOWER SHELL ASSEMBLY** DWG. No. V049-4-003

MATERIAL 304L S/S

WELDING PROCESS:		GMAW		GTAW		FCAW		SMAW		SAW
WELD PROCEDURES	G1		T1	P-P8-P8-2 REV.0	F1		M1		S1	
	G2		T2	T-P8-P8-PSI REV.0	F2		M2		S2	
	G3		T3		F3		M3		S3	
FILLER METAL										

PREPARED BY: DJH 9-16-96 APPROVED BY: — W/M REV. —

ASSEMBLY NUMBER	LOCATION NUMBER	WELD JOINT	TACKING RECORD			WELD JOINT RECORD			REPAIR RECORD		
			WELDER I.D.	FILLER METAL HEAT/LOT NO.	PROC.	WELDER I.D.	FILLER METAL HEAT/LOT NO.	PROC.	REPAIR WELDER	WELD REPAIR FILLER MET.	PROC.
1	12	51-52	P	AT6028	T2	P	AT6028	T2			
1	13	51-52	P	AT6028	T2	P	AT6028	T2			
1	14	51-52	P	AT6028	T2	P	AT6028	T2			
1	15	51-52	P	AT6028	T2	P	AT6028	T2			
1	16	51-52	P	AT6028	T2	P	AT6028	T2			
1	17	51-52	P	AT6028	T2	P	AT6028	T2			
1	18	51-52	P	AT6028	T2	P	AT6028	T2			

RANOR, INC · SERIAL NO. 3

WELD MAP/WELD JOINT IDENTIFICATION SHEET

WELD MAP PAGE	CUSTOMER	CUST P.O.	JOB NO.	LEVEL NO.
6A CON'T 6B	PROCESS SYSTEMS	555822-00	7300 F/M	1

DESCRIPTION	MATERIAL
LOWER SHELL SUBASSEMBLY DWG. No. V049-4-003	304L S/S

WELDING PROCESS:	GMAW		GTAW		FCAW		SMAW		SAW	
WELD PROCEDURES	G1		T1	P-P8-P8-1 REV.0	F1		M1		S1	
	G2		T2	T-P8-P8-PSI REV.0	F2		M2		S2	
	G3		T3		F3		M3		S3	
FILLER METAL										

PREPARED BY:	APPROVED BY:	W/M REV.
DJH 9-16-96		

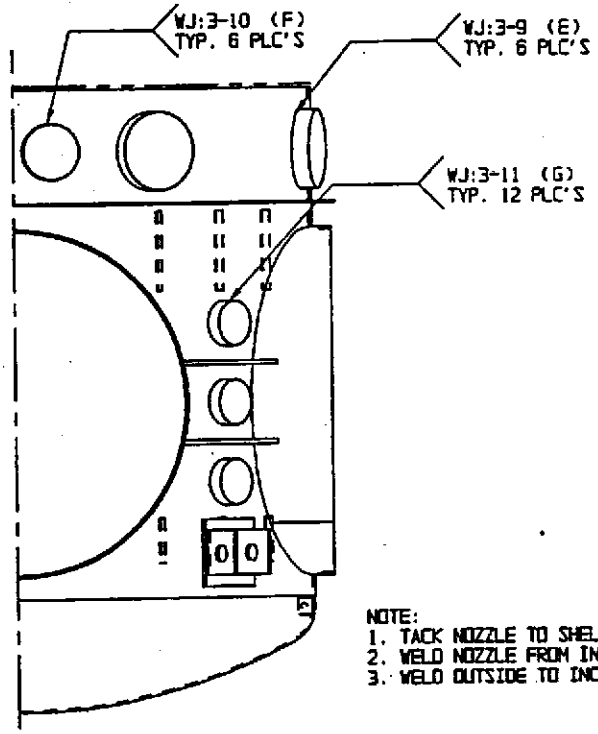

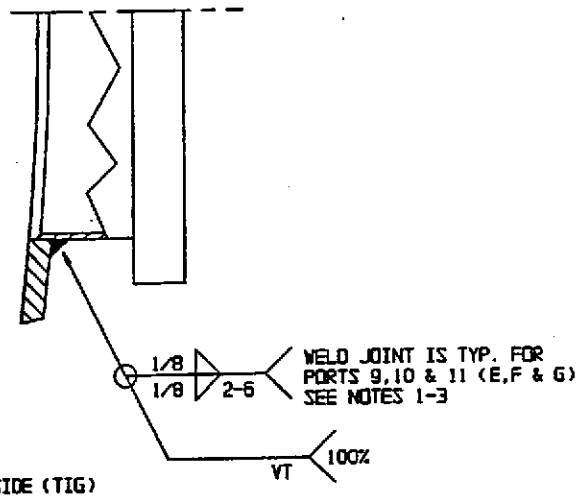

NOTE:
1. TACK NOZZLE TO SHELL FROM OUTSIDE (TIG)
2. WELD NOZZLE FROM INSIDE (TIG)
3. WELD OUTSIDE TO INCLUDE TACKS (TIG)

ASSEMBLY NUMBER	LOCATION NUMBER	WELD JOINT	TACKING RECORD			WELD JOINT RECORD			REPAIR RECORD		
			WELDER I.D.	FILLER METAL HEAT/LOT NO.	PROC.	WELDER I.D.	FILLER METAL HEAT/LOT NO.	PROC.	REPAIR WELDER	WELD REPAIR FILLER MET.	PROC.
1	1	3-10	W	AT6834	T2	P/W	AT6834	T2			
1	2	3-10	W	AT6834	T2	P/W	AT6834	T2			
1	3	3-10	W	AT6834	T2	P/W	AT6834	T2			
1	4	3-10	W	AT6834	T2	P/W	AT6834	T2			
1	5	3-10	W	AT6834	T2	P/W	AT6834	T2			
1	6	3-10	W	AT6834	T2	P/W	AT6834	T2			
1	1	3-11	W	AT6834	T2	LL	AT6834 S710840	T2			
1	2	3-11	W	AT6834	T2	LL	AT6834 S710840	T2			

RANOR, INC · SERIAL NO. 3

WELD MAP/WELD JOINT IDENTIFICATION SHEET

WELD MAP PAGE	CUSTOMER	CUST P.O.	JOB NO.	LEVEL NO.
6B CON'T 7	PROCESS SYSTEMS	555822-00	7300 F/M	1

DESCRIPTION **LOWER SHELL ASSEMBLY** DWG. No. V049-4-003

MATERIAL 304L S/S

WELDING PROCESS:	GMAW		GTAW		FCAW		SMAW		SAW	
WELD PROCEDURES	G1		T1	P-P8-P8-1 REV.0	F1		M1		S1	
	G2		T2	T-P8-P8-PSI REV.0	F2		M2		S2	
	G3		T3		F3		M3		S3	
FILLER METAL										

PREPARED BY: DJH 9-16-96 APPROVED BY: ——— W/M REV. —

ASSEMBLY NUMBER	LOCATION NUMBER	WELD JOINT	TACKING RECORD			WELD JOINT RECORD			REPAIR RECORD		
			WELDER I.D.	FILLER METAL HEAT/LOT NO.	PROC.	WELDER I.D.	FILLER METAL HEAT/LOT NO.	PROC.	REPAIR WELDER	WELD REPAIR FILLER MET.	PROC.
1	3	3-11	W	AT6834	T2	LL	AT6834 S710840	T2			
1	4	3-11	W	AT6834	T2	LL	AT6834 S710840	T2			
1	5	3-11	W	AT6834	T2	LL	AT6834 S710840	T2			
1	6	3-11	W	AT6834	T2	LL	AT6834 S710840	T2			
1	7	3-11	W	AT6834	T2	LL	AT6834 S710840	T2			
1	8	3-11	W	AT6834	T2	LL	AT6834 S710840	T2			
1	12	3-11	W	AT6834	T2	LL	AT6834 S710840	T2			
1	1	3-9	W	AT6834	T2	P/W	AT6834	T2			
1	2	3-9	W	AT6834	T2	P/W	AT6834	T2			
1	3	3-9	W	AT6834	T2	P/W	AT6834	T2			
1	4	3-9	W	AT6834	T2	P/W	AT6834	T2			
1	5	3-9	W	AT6834	T2	P/W	AT6834	T2			
1	6	3-9	W	AT6834	T2	P/W	AT6834	T2			

RANOR, INC · SERIAL NO. 3

WELD MAP/WELD JOINT IDENTIFICATION SHEET

WELD MAP PAGE	CUSTOMER	CUST P.O.	JOB NO.	LEVEL NO.
7 CON'T 8	PROCESS SYSTEMS	555822-00	7300 F/M	1

DESCRIPTION LOWER SHELL SUBASSEMBLY
DWG. No. V049-4-003

MATERIAL 304L S/S

WELDING PROCESS:	GMAW		GTAW		FCAW		SMAW		SAW	
WELD PROCEDURES	G1		T1	P-P8-P8-1 REV.0	F1		M1		S1	
	G2		T2	T-P8-P8-PSI REV.0	F2		M2		S2	
	G3		T3		F3		M3		S3	
FILLER METAL										

PREPARED BY: DJH 9-16-96 | APPROVED BY: — | W/M REV. —

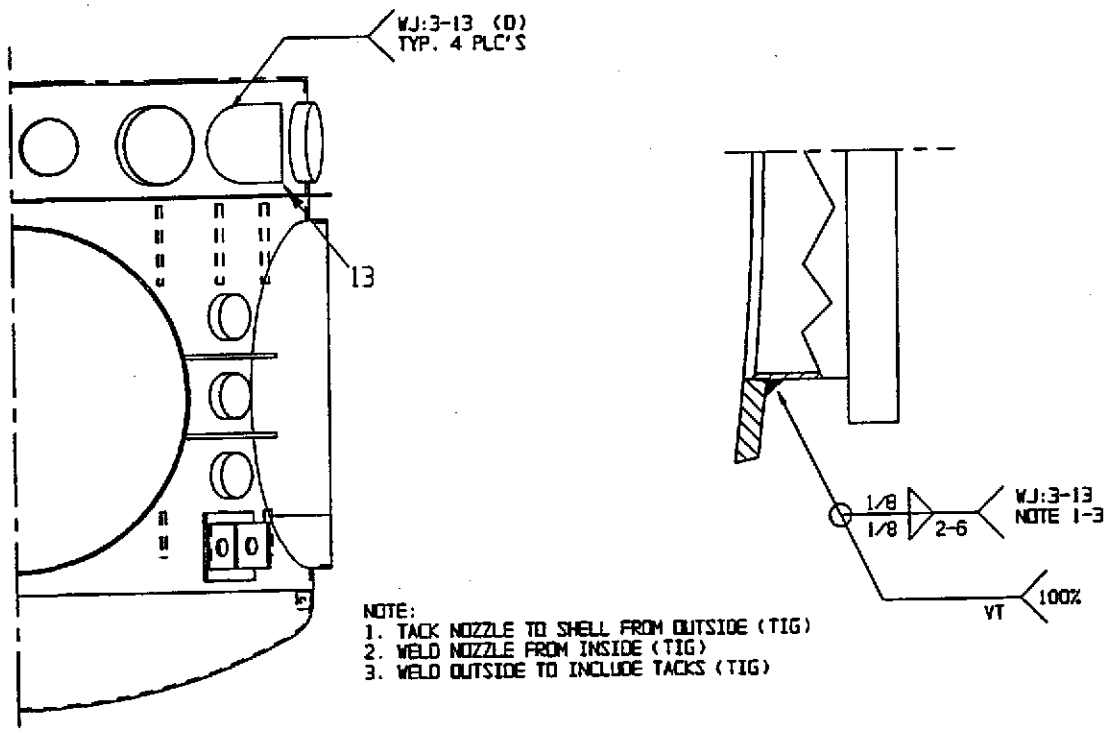

NOTE:
1. TACK NOZZLE TO SHELL FROM OUTSIDE (TIG)
2. WELD NOZZLE FROM INSIDE (TIG)
3. WELD OUTSIDE TO INCLUDE TACKS (TIG)

ASSEMBLY NUMBER	LOCATION NUMBER	WELD JOINT	TACKING RECORD			WELD JOINT RECORD			REPAIR RECORD		
			WELDER I.D.	FILLER METAL HEAT/LOT NO.	PROC.	WELDER I.D.	FILLER METAL HEAT/LOT NO.	PROC.	REPAIR WELDER	WELD REPAIR FILLER MET.	PROC.
1	1	3-13	O	S437864	T2	LL	S437864	T2			
1	2	3-13	O	S437864	T2	LL	S437864	T2			
1	3	3-13	O	S437864	T2	LL	S437864	T2			
1	4	3-13	O	S437864	T2	LL	S437864	T2			

RANOR, INC · SERIAL NO. 3

WELD MAP/WELD JOINT IDENTIFICATION SHEET

WELD MAP PAGE	CUSTOMER	CUST P.O.	JOB NO.	LEVEL NO.
8 CON'T 9	PROCESS SYSTEMS	555822-00	7300 F/M	1

DESCRIPTION	MATERIAL
LOWER SHELL SUBASSEMBLY DWG. No. V049-4-003	304L S/S

WELDING PROCESS:	GMAW		GTAW		FCAW		SMAW		SAW	
WELD PROCEDURES	G1		T1	P-P8-P8-1 REV.0	F1		M1		S1	
	G2		T2	T-P8-P8-PSI REV.0	F2		M2		S2	
	G3		T3		F3		M3		S3	
FILLER METAL										

PREPARED BY:	APPROVED BY:	W/M REV.
DJH 9-16-96		

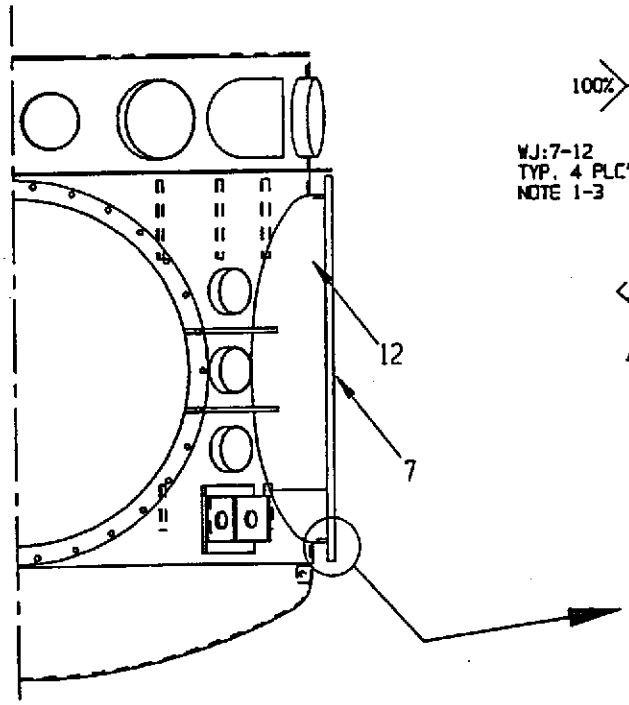

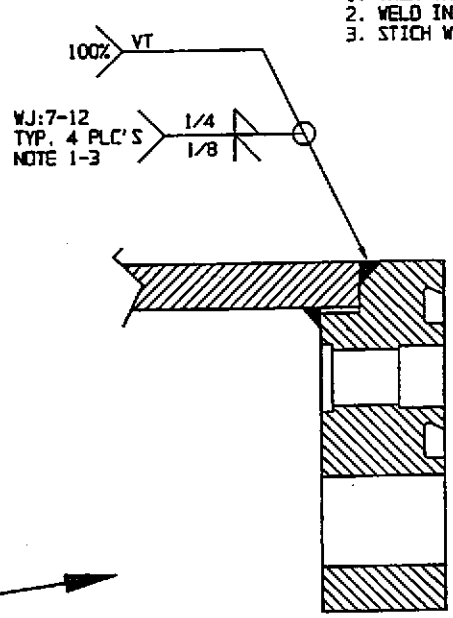

NOTE:
1. TACK THE OUTSIDE (TIG)
2. WELD INSIDE (TIG)
3. STICH WELD OUTSIDE (PAW)

ASSEMBLY NUMBER	LOCATION NUMBER	WELD JOINT	TACKING RECORD WELDER I.D.	TACKING RECORD FILLER METAL HEAT/LOT NO.	TACKING RECORD PROC.	WELD JOINT RECORD WELDER I.D.	WELD JOINT RECORD FILLER METAL HEAT/LOT NO.	WELD JOINT RECORD PROC.	REPAIR RECORD REPAIR WELDER	REPAIR RECORD WELD REPAIR FILLER MET.	REPAIR RECORD PROC.
1	1	7-12	LL	S937864	T2	P/N	AT6834	T2			
1	2	7-12	LL	S937864	T2	P/N	AT6834	T2			
1	3	7-12	LL	S937864	T2	P/N	AT6834	T2			
1	4	7-12	LL	S937864	T2	V-00/N	AT6834	T2			
		7-12	—	—	—	LL	S937864	T1/T2			
		7-12	—	—	—	LL	S937864	T2/T1			
		7-12	—	—	—	LL	S937864	T2/T1			
		7-12	—	—	—	LL	S937864	T2/T1			

RANOR, INC · SERIAL NO. 3

WELD MAP/WELD JOINT IDENTIFICATION SHEET

WELD MAP PAGE	CUSTOMER	CUST P.O.	JOB NO.	LEVEL NO.
9 CON'T 10	PROCESS SYSTEMS	555822-00	7300 F/M	1

DESCRIPTION	MATERIAL
LOWER SHELL SUBASSEMBLY DWG. No. V049-4-003	304L S/S

WELDING PROCESS:	GMAW		GTAW		FCAW		SMAW		SAW	
WELD PROCEDURES	G1		T1	P-P8-P8-1 REV.0	F1		M1		S1	
	G2		T2	T-P8-P8-PSI REV.0	F2		M2		S2	
	G3		T3		F3		M3		S3	
FILLER METAL										

PREPARED BY:	APPROVED BY:	W/M REV.
DJH 9-16-96	—	—

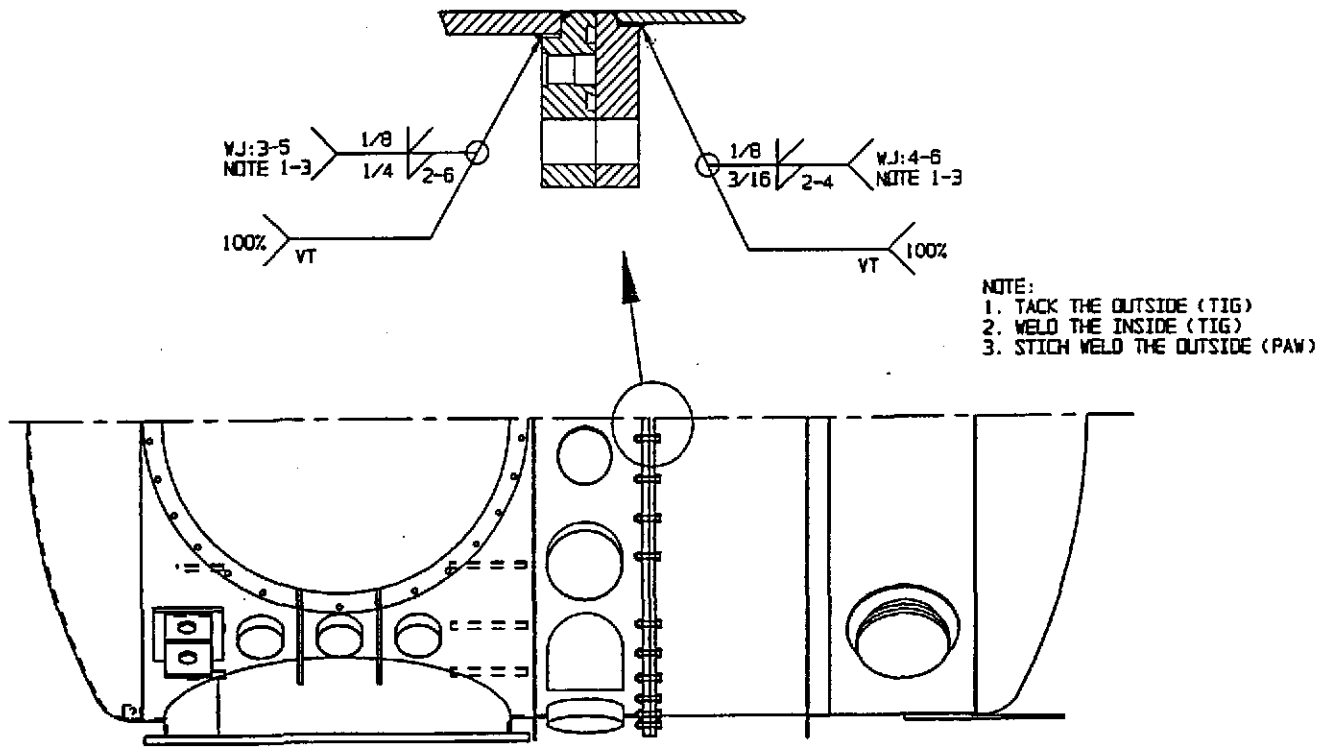

ASSEMBLY NUMBER	LOCATION NUMBER	WELD JOINT	TACKING RECORD			WELD JOINT RECORD			REPAIR RECORD		
			WELDER I.D.	FILLER METAL HEAT/LOT NO.	PROC.	WELDER I.D.	FILLER METAL HEAT/LOT NO.	PROC.	REPAIR WELDER	WELD REPAIR FILLER MET.	PROC.
1	1	3-5	W	AT6834	T-2	N W	~~S437864~~ AT6834	T1 T2			
1	1	4-6	O	AT6834	T2	W/P	S437864 AT6834	T1 T2			

RANOR, INC

S/N: 3

INSPECTION/NONDESTRUCTIVE EXAMINATION RECORD

WELD MAP	CUSTOMER:	CUSTOMER PO:	JOB NO.:	LEVEL NO.:
10 CONT. --	PROCESS SYSTEMS INT.	555822-00	7300 F/M	1

DESCRIPTION:	MATERIAL:
LOWER SHELL ASSEMBLY; DWG NO. V049-4-003	304L S/S

PREPARED BY	APPROVED BY:	WELD MAP REV.:
DJH 6-17-96	———	—

VISUAL EXAMINATION REPORT - PROCEDURE NO. RQCP-25, REV. 4

AREA EXAMINED:
☐ ROOT
☒ FINAL
☐ BEVELED EDGES

SURFACE CONDITION:
☒ AS-WELDED
☐ GROUND
☐ MACHINED

	WELD JOINT NUMBER	WJ:3-20 4 PLC'S	WJ:1-3 1-3	WJ:3-15	WJ:3-12 4 PLC'S	WJ:3-16 8 PLC'S	WJ:3-21 21 PLC'S	WJ:3-22 4 PLC'S	WJ:3-52 18 PLC'S	WJ:51-52 18 PLC'S
	NDE EXAMINER LEVEL DATE	MB II 2-4-97	MB II 2-4-97	MB II 2-4-97	MB II 2-4-97	MB II 2-4-97	MB II 2-4-97	MB II 2-4-97	MB II 2-4-97	MB II 2-4-97
	CUSTOMER QUALITY REP. DATE									
Cracks		None	None	None	None	None	None	None	None	None
Fusion		OK	OK	OK	OK	OK	OK	OK	OK	OK
Crater Filled to Full Cross-section of Weld		—	OK	—	OK	—	OK	OK	OK	OK
Weld Profile		OK	OK	OK	OK	OK	OK	OK	OK	OK
Undercut		None	None	None	None	None	None	None	None	None
Piping Porosity		None	None	None	None	None	None	None	None	None
Fillet Weld Size		OK	—	OK	OK	OK	—	—	—	—
Visual Indications After Repair		—	—	—	—	—	—	—	—	—
Final Weld Joint Acceptance		Accept	Accept	Accept	Accept	Accept	Accept	Accept	Accept	Accept

VISUAL EXAMINATION REPORT - PROCEDURE NO. RQCP-25, REV. 4

AREA EXAMINED:
☐ ROOT
☒ FINAL
☐ BEVELED EDGES

SURFACE CONDITION:
☒ AS-WELDED
☐ GROUND
☐ MACHINED

	WELD JOINT NUMBER	WJ:3-10 6 PLC'S	WJ:3-11 12 PLC'S	WJ:3-9 6 PLC'S	WJ:3-13 4 PLC'S	WJ:7-12 4 PLC'S	WJ:3-5	WJ:4-6		
	NDE EXAMINER LEVEL DATE	MB II 2-4-97	MB II 2-4-97	MB II 2-4-97	MB II 2-4-97	MB II 2-4-97	MB II 2-4-97	MB II 2-4-97		
	CUSTOMER QUALITY REP. DATE									
Cracks		None	None	None	None	None	None	None		
Fusion		OK	OK	OK	OK	OK	OK	OK		
Crater Filled to Full Cross-section of Weld		—	—	—	—	OK	OK	OK		
Weld Profile		OK	OK	OK	OK	OK	OK	OK		
Undercut		None	None	None	None	None	None	None		
Piping Porosity		None	None	None	None	None	None	None		
Fillet Weld Size		OK	OK	OK	OK	OK	OK	OK		
Visual Indications After Repair		—	—	—	—	—	—	—		
Final Weld Joint Acceptance		Accept	Accept	Accept	Accept	Accept	Accept	Accept		

NDE Examiner: [signature] Level: II Date: 2-4-97

7300

RANOR, INC LEV 2 BILL OF MATERIAL

FORM QA 4.1
REV. 1 (6/22/90)

CUSTOMER PROCESS SYS. INT. DRAWING NO. V049-4-003 DUE DATE 2-3-97

JOB NO. 7300 PM PART DESCRIPTION UPPER SHELL ASS'Y UNITS REQUIRED 1 SHEET 1 OF 1

PREPARED BY DRB Q.C. APPROVAL

ITEM NO.	QUANTITY	MATERIAL SPECIFICATION	THICKNESS	SIZE	LEV	SKETCH	SHEAR	SAW	THERMAL CUTTING	BEVEL	PRE-MACH.	FORM	COMMENTS	MATERIAL S-P-C	HEAT NUMBER
4	1	304L SS		1/4" UPPER SHELL	2A								S/N:		
14	1			UPPER HEAD	2B								S/N:		
AS NOTED	A/R			MISC. PARTS SEE BELOW	2C										
9A	2			2X FLANGE ASS'Y	2D								S/N:		
				ITEM 2C PARTS	2C										
6	1)	304L SS	1 1/4	V049-4-091 (FLANGE)									S/N:		
17	1)		4	4x4 ℄ STIFFENER											
18	2)		1/2"	14" PORT RE-PAD											
19	2)		1/2"	LIFT LUG REPAD											
50	2)		1/2"	LIFT LUG											
63	1)	304L SS	1/2"	PUMP REPAD	2C								S/N:		

(25)

RANOR, INC · SERIAL NO. 3

WELD MAP/WELD JOINT IDENTIFICATION SHEET

WELD MAP PAGE	CUSTOMER	CUST P.O.	JOB NO.	LEVEL NO.
1 CON'T 2	PROCESS SYSTEMS	555822-00	7300 F/M	2

DESCRIPTION: **UPPER SHELL SUBASSEMBLY**
DWG. No. V049-4-003

MATERIAL: 304L S/S

WELDING PROCESS:	GMAW	GTAW	FCAW	SMAW	SAW
WELD PROCEDURES	G1	T1 P-P8-P8-1 REV.0	F1	M1	S1
	G2	T2 T-P8-P8-PSI REV.0	F2	M2	S2
	G3	T3	F3	M3	S3
FILLER METAL					

PREPARED BY: DJH 9-18-96 | APPROVED BY: — | W/M REV. —

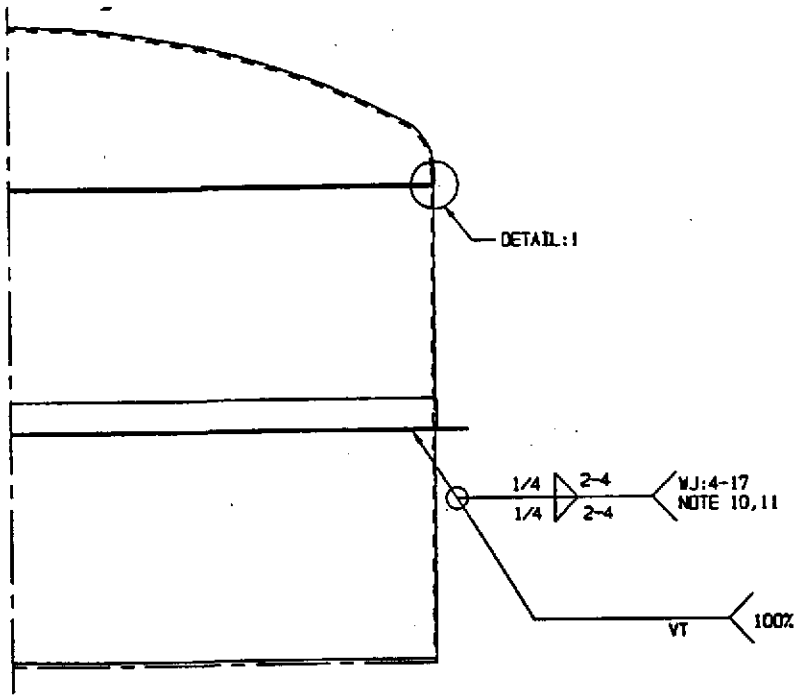

WELDING NOTES:
1. GTAW PASS #1 FROM THE O.D.
2. GTAW PASS #2 FROM THE I.D.
3. PAW PASSES FROM THE I.D. AS REQUIRED.
4. FIT-UP WITH 1/8 TO 3/16 GAP
5. TACK FROM OUTSIDE WITH PURGE INSIDE (GTAW)
6. ONE INCH TACKS ON TEN INCH CENTERS.
7. BACKSTEP WELD ROOT PASS FROM TACK TO TACK FROM OUTSIDE (TIG)
8. GTAW PASS FROM INSIDE (TIG)
9. FILL FROM I.D. AS REQUIRED (PAW)
10. TACK BOTH SIDES (PAW)
11. WELD BOTH SIDES ALTERNATING; END WELDS ON TACKS (PAW)

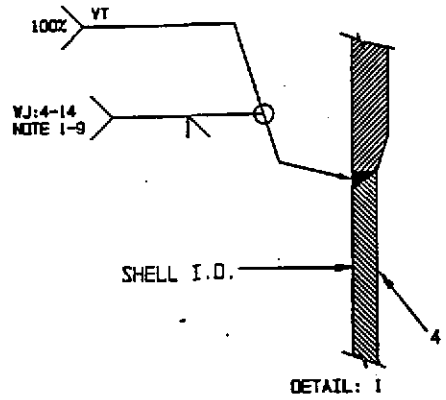

ASSEMBLY NUMBER	LOCATION NUMBER	WELD JOINT	TACKING RECORD WELDER I.D.	TACKING RECORD FILLER METAL HEAT/LOT NO.	TACKING RECORD PROC.	WELD JOINT RECORD WELDER I.D.	WELD JOINT RECORD FILLER METAL HEAT/LOT NO.	WELD JOINT RECORD PROC.	REPAIR RECORD REPAIR WELDER	REPAIR RECORD WELD REPAIR FILLER MET.	REPAIR RECORD PROC.
1	1	4-17	O-W	CT6824	T2	LL	CT6824	T1			
1	1	4-14	O-W	CT6824	T2	W/LL	ST10840	T2			

RANOR, INC · SERIAL NO. 3

WELD MAP/WELD JOINT IDENTIFICATION SHEET

WELD MAP PAGE	CUSTOMER	CUST P.O.	JOB NO.	LEVEL NI
2 CON'T 3	PROCESS SYSTEMS	555822-00	7300 F/M	2

DESCRIPTION **UPPER SHELL SUBASSEMBLY** DWG. No. V049-4-003

MATERIAL 304L S/S

WELDING PROCESS:	GMAW		GTAW		FCAW		SMAW		SAW	
WELD PROCEDURES	G1		T1	P-P8-P8-1 REV.0	F1		M1		S1	
	G2		T2	T-P8-P8-PSI REV.0	F2		M2		S2	
	G3		T3		F3		M3		S3	
FILLER METAL										

PREPARED BY: DJH 9-18-96 | APPROVED BY: | W/M REV. -

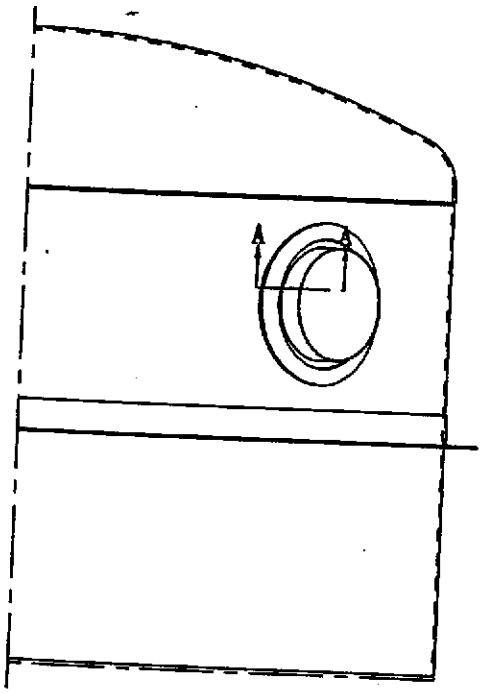

WELDING NOTES:
1. TACK NOZZLE TO SHELL FROM OUTSIDE (TIG)
2. WELD FROM INSIDE (TIG)
3. WELD FROM TACK TO TACK ON THE OUTSIDE (TIG)
4. TACK BOTH SIDES (PAW)
5. WELD BOTH SIDES (PAW)

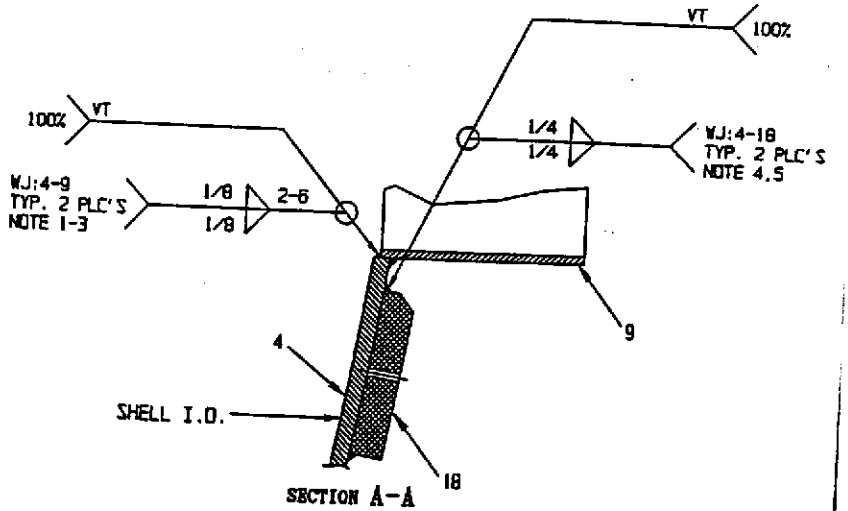

SECTION A-A

ASSEMBLY NUMBER	LOCATION NUMBER	WELD JOINT	TACKING RECORD WELDER I.D.	TACKING RECORD FILLER METAL HEAT/LOT NO.	TACKING RECORD PROC.	WELD JOINT RECORD WELDER I.D.	WELD JOINT RECORD FILLER METAL HEAT/LOT NO.	WELD JOINT RECORD PROC.	REPAIR RECORD REPAIR WELDER	REPAIR RECORD WELD REPAIR FILLER MET.	REPAIR RECORD PROC.
1	1	4-9	W	AT6834	T2	WW	AT6834	T2			
1	2	4-9	W	AT6834	T2	WW	AT6834	T2			
1	1	4-18	LL	AT6834	T2	LL	5937864	T2/T1			
1	2	4-18	LL	AT6834	T2	LL	5937864	T2/T1			

RANOR, INC · SERIAL NO. 3

WELD MAP/WELD JOINT IDENTIFICATION SHEET

WELD MAP PAGE	CUSTOMER	CUST P.O.	JOB NO.	LEVEL NO.
3 CON'T 4	PROCESS SYSTEMS	555822-00	7300 F/M	2

DESCRIPTION	MATERIAL
UPPER SHELL SUBASSEMBLY DWG. No. V049-4-003	304L S/S

WELDING PROCESS:	GMAW		GTAW		FCAW		SMAW		SAW	
WELD PROCEDURES	G1		T1	P-P8-P8-1 REV.0	F1		M1		S1	
	G2		T2	T-P8-P8-PSI REV.0	F2		M2		S2	
	G3		T3		F3		M3		S3	
FILLER METAL										

PREPARED BY:	APPROVED BY:	W/M REV.
DJH 9-18-96		-

WELDING NOTE:
1. (PAW) WELD AS REQUIRED.
2. WELD 3 SIDES ONLY, DO NOT WELD BEHIND LIFT LUG.

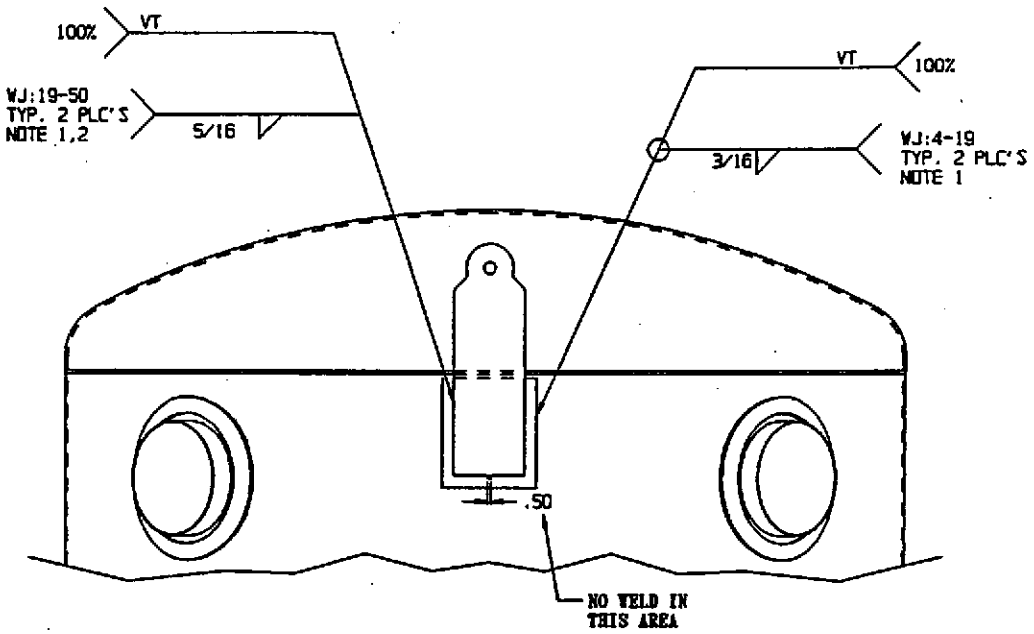

ASSEMBLY NUMBER	LOCATION NUMBER	WELD JOINT	TACKING RECORD			WELD JOINT RECORD			REPAIR RECORD		
			WELDER I.D.	FILLER METAL HEAT/LOT NO.	PROC.	WELDER I.D.	FILLER METAL HEAT/LOT NO.	PROC.	REPAIR WELDER	WELD REPAIR FILLER MET.	PROC.
1	1	4-19	W	AT6028	T2	LL/P	CT6824	T1			
1	2	4-19	W	AT6028	T2	W	CT6824	T1			
1	1	19-50	W	AT6028	T2	LL/P	CT6824	T1			
1	2	19-50	W	AT6028	T2	W	CT6824	T2			

RANOR, INC · SERIAL NO. 3

WELD MAP/WELD JOINT IDENTIFICATION SHEET

WELD MAP PAGE	CUSTOMER	CUST P.O.	JOB NO.	LEVEL NO
4 CON'T 5	PROCESS SYSTEMS	555822-00	7300 F/M	2

DESCRIPTION: UPPER SHELL SUBASSEMBLY
DWG. No. V049-4-003

MATERIAL: 304L S/S

WELDING PROCESS:	GMAW		GTAW		FCAW		SMAW		SAW	
WELD PROCEDURES	G1		T1	P-P8-P8-1 REV.0	F1		M1		S1	
	G2		T2	T-P8-P8-PSI REV.0	F2		M2		S2	
	G3		T3		F3		M3		S3	
FILLER METAL										

PREPARED BY: DJH 9-18-96 | APPROVED BY: | W/M REV. -

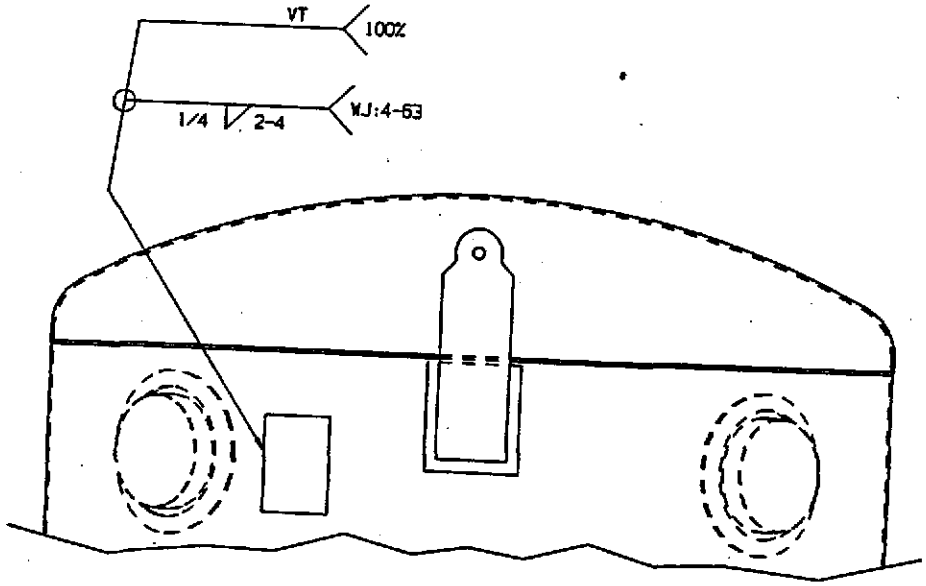

ASSEMBLY NUMBER	LOCATION NUMBER	WELD JOINT	TACKING RECORD			WELD JOINT RECORD			REPAIR RECORD		
			WELDER I.D.	FILLER METAL HEAT/LOT NO.	PROC.	WELDER I.D.	FILLER METAL HEAT/LOT NO.	PROC.	REPAIR WELDER	WELD REPAIR FILLER MET.	PROC.
1	1	4-63	O	AT6028	T2	P	AT6028	T1 T2			

RANOR, INC.

S/N: 3

INSPECTION/NONDESTRUCTIVE EXAMINATION RECORD

WELD MAP	CUSTOMER:	CUSTOMER PO:	JOB NO.:	LEVEL NO.:
5 CONT. –	PROCESS SYSTEMS INT.	555822-00	7300 F/M	2

DESCRIPTION:	MATERIAL:
UPPER SHELL ASSEMBLY; DWG NO. V049-4-003	304L S/S

PREPARED BY	APPROVED BY:	WELD MAP REV.:
DJH 6-18-96	—	—

VISUAL EXAMINATION REPORT - PROCEDURE NO. RQCP-25, REV. 4

AREA EXAMINED:
- ☐ ROOT
- ☒ FINAL
- ☐ BEVELED EDGES

SURFACE CONDITION:
- ☒ AS-WELDED
- ☐ GROUND
- ☐ MACHINED

WELD JOINT NUMBER	WJ:4-17	WJ:4-14	WJ:4-9 2 PLC'S	WJ:4-18 2 PLC'S	WJ:4-19 2 PLC'S	WJ:19-50 2 PLC'S	WJ:4-63		
NDE EXAMINER LEVEL DATE	WKT II 2-5-97	[illegible] II 2-6-97	WKT II 2-5-97	WKT II 2-5-97	[illegible] II 2-6-97	[illegible] II 2-6-97	[illegible] II 2-6-97		
CUSTOMER QUALITY REP. DATE									
Cracks	NO	None	NO	NO	None	None	None		
Fusion	OK	OK	OK	OK	OK	OK	OK		
Crater Filled to Full Cross-section of Weld	–	OK	–	–	–	–	–		
Weld Profile	OK	OK	OK	OK	OK	OK	OK		
Undercut	NO	None	NO	NO	None	None	None		
Piping Porosity	NO	None	NO	NO	None	None	None		
Fillet Weld Size	3	—	OK	OK	OK	OK	OK		
Visual Indications After Repair	0	—	–	–	–	–	–		
Final Weld Joint Acceptance	Acc. [illegible]	Accept	ACCEPT	ACCEPT	Accept	Accept	Accept		

VISUAL EXAMINATION REPORT - PROCEDURE NO. RQCP-25, REV. 4

AREA EXAMINED:
- ☐ ROOT
- ☐ FINAL
- ☐ BEVELED EDGES

SURFACE CONDITION:
- ☐ AS-WELDED
- ☐ GROUND
- ☐ MACHINED

WELD JOINT NUMBER									
NDE EXAMINER LEVEL DATE									
CUSTOMER QUALITY REP. DATE									
Cracks									
Fusion									
Crater Filled to Full Cross-section of Weld									
Weld Profile									
Undercut									
Piping Porosity									
Fillet Weld Size									
Visual Indications After Repair									
Final Weld Joint Acceptance									

NDE Examiner: [signature] SMB QA RANOR Level: II Date: 2/6/97

7300 F/r

RAMOR, INC LEV 2C BILL OF MATERIAL

FORM QA 4.1 REV. 1 (6/22/90)

DUE DATE AS NOTED ON P.O.

CUSTOMER PROCESS SYS. INT. DRAWING NO. V049-4-003 UNITS REQUIRED 5 sets SHEET 1 OF 1

JOB NO 7300 F/M PART DESCRIPTION UPPER FLANGE & MISC. PARTS PREPARED BY dRB Q.C. APPROVAL

ITEM NO.	QUANTITY	MATERIAL SPECIFICATION	THICKNESS	SIZE	LEV	SKETCH	SHEAR	SAW	THERMAL CUTTING	BEVEL	PRE-MACH.	FORM	COMMENTS	MATERIAL S-P-C	HEAT NUMBER
6	5	304L SS	1¼	112½ ϕ O.D. x 104¼ ϕ I.D.							DWG —		V049-4-041 FLANGE	C	
17	5	304L SS	¼	4" x 4" x ¼ x 165 23/32		#3		—		—				C	
18	10	304L SS	½"	20¼" O.D. x 15.0" I.D. *		#4			#3 ✓	—			SN-3	C	39233-4A
19	10	304L SS	½"	12.0 x 13½ ~~Cut~~ *		#4			#7 ✓		DWG —	4 PCS. →	SN-2	C	96985-1B
												6 PCS. →	SN-3		39233-4A
50	10	304L SS	½"	9 x 28 ½ ~~Copies~~ CUT *		#5			DNC ✓	¼	PCS. →		SN-2	C	96985-1B
										6	PCS →		SN-3		39233-4A
63	5	304L SS	½"	8 x 12 *					#7 ✓				SN-3	C	39233-4A

* BURNING NOTE:

ITEMS 18, 19, 50, & 63 MUST BE BURN'T FROM 52 ¼" INSIDE RADIUS FORMED STOCK. SEE SKETCH #485 TYP.

(19)

RECEIVED NOV 0 1 1991 Job 1100FM

Arcos Alloys

A Division of Hoskins Manufacturing Company
Mount Carmel, PA 17851

DATE 10/23/91

ASME CERTIFICATE QSC-448
EXPIRATION DATE: OCT.23/93

CERTIFICATION OF TESTS

SOLD TO:
RANOR, INC.
BELLA DRIVE
P.O. BOX 458
WESTMINSTER, MA 01473

SHIPPED TO:
SAME

RECEIVED BY SP 11-29-91 RANOR Q.C. S.P.

N16028

ARCOS S.O. NO.	CUSTOMER ORDER NO.	CONSIGNEE ORDER NO.	DATE SHIPPED
45447	32252	N/A	10/23/91

ITEM	SIZE	GRADE	LOT NO./ALLOY NO.	QUANTITY
3	1/16 X 36"	ARCOS 308L	AT6028	30#

SPECIFICATION: ASME SFA 5.9 CLASS ER308L ASME SECTION II, PART C, ASME B&PVC SECTION III, SUBSECTION NB2000, NB2400, 1989 EDITION AND ALL PARAS AND ADDENDA THRU 1990 AND 10CFR21 APPLIES.

CHEMICAL ANALYSIS WELD

C	Mn	Si	S	P	Cr	Ni	Mo	Cb	Cb + Ta
.01	1.9	.48	.01	.02	19.9	10.6	.12		.032

Ta	Ti	Al	Co	Cu	Fe	V			
	.000			.08		.076			

ADDITIONAL TESTS RESULTS

Ferrite - Diagram: NB2433.1-1 7FN
Magna Gage: 7FN
X-Ray
Bends

	As Welded	Heat Treated
Charpys:		
Tensiles:		
Yield		
Tensile		
Elong.		
Red. of Area		

OTHER INFORMATION
LOT CLASSIFICATION - S1
INTENSITY OF TESTING - SCHEDULE F

THIS MATERIAL IS FREE FROM MERCURY, RADIUM OR ALPHA PARTICLE CONTAMINATION.

We hereby certify that the above material has been tested in accordance with the listed specification and is in conformance with all requirements.

ARCOS

Q.A. MANAGER

QUALITY ASSURANCE DEPARTMENT

Jb 7300 FM
PO 48385

Arcos Alloys
A Division of Hoskins Manufacturing Company
Mount Carmel, PA 17851

DATE 12/06/96

CERTIFICATION OF TESTS

SOLD TO:

RANOR, INC.
BELLA DRIVE
P.O. BOX 458
WESTMINSTER, MA 01473

SHIPPED TO:

SAME

ARCOS S.O. NO.	CUSTOMER ORDER NO.	CONSIGNEE ORDER NO.	DATE SHIPPED
61361	48385	N/A	12/06/96

ITEM	SIZE	GRADE	LOT NO./ALLOY NO.	QUANTITY
1	1/16 X 36"	ARCOS 308L	AT6834	100#

SPECIFICATION: AWS A5.9-93 CLASS ER308L ASME SFA 5.9
ASME SECTION II, PART C, 1995 EDITION,
AND ALL PARAS AND ADDENDA THRU 1995.

CHEMICAL ANALYSIS WIRE

C	Mn	Si	S	P	Cr	Ni	Mo	Cb	Cb + Ta
.02	2.1	.50	.01	.01	20.1	10.1	.03		

Ta	Ti	Al	Co	Cu	Fe	V			
				.04					

ADDITIONAL TESTS RESULTS

Ferrite - Diagram: _____
Magna Gage: _____
X-Ray _____
Bends _____

12/10/96 FJ

	As Welded	Heat Treated
Charpys:		
Tensiles:		
Yield		
Tensile		
Elong.		
Red. of Area		

OTHER INFORMATION
LOT CLASSIFICATION - S1
INTENSITY OF TESTING - SCHEDULE F

THIS MATERIAL IS FREE FROM MERCURY, RADIUM OR ALPHA PARTICLE CONTAMINATION.

We hereby certify that the above material has been tested in accordance with the listed specification and is in conformance with all requirements.

ARCOS

T. Webb Q.A. MANAGER

QUALITY ASSURANCE DEPARTMENT

RECEIVED AUG 1 4 1995

Arcos Alloys
A Division of Hoskins Manufacturing Company
Mount Carmel, PA 17851

DATE 08/07/95

CERTIFICATION OF TESTS

ASME CERTIFICATE QSC-448
EXPIRATION DATE:OCT.23/96

SOLD TO:
RANOR, INC.
P.O. BOX 458
BELLA DRIVE
WESTMINSTER, MA 01473

SHIPPED TO:
SAME

Stk
PO 43670

ARCOS S.O. NO.	CUSTOMER ORDER NO.	CONSIGNEE ORDER NO.	DATE SHIPPED
57478	43670	N/A	08/07/95

ITEM	SIZE	GRADE	LOT NO./ALLOY NO.	QUANTITY
01	1/16 X 36"	ARCOS 308L	AT6641	50#

SPECIFICATION: ASME SFA 5.9 CLASS ER308L ASME SECTION II, PART C, ASME B&PVC SECTION III, SUBSECTION NB2400, 1992 EDITION, AND ALL PARAS AND ADDENDA THRU 1994 AND 10CFR21 APPLIES.

CHEMICAL ANALYSIS WIRE

C ✓	Mn ✓	Si ✓	S ✓	P ✓	Cr ✓	Ni ✓	Mo ✓	Cb	Cb + Ta
.01	2.1	.55	.01	.02	19.9	10.0	.08		.006
Ta	**Ti**	**Al**	**Co**	**Cu ✓**	**Fe**	**V**	**N**		
	.000			.05		.053	.069		

ADDITIONAL TESTS RESULTS

Ferrite - Diagram: NB2433.1-1 10FN
Magna Gage: 8FN ✓
X-Ray
Bends

	As Welded	Heat Treated
Charpys:		
Tensiles:		
Yield		
Tensile		
Elong.		
Red. of Area		

8/14/95

OTHER INFORMATION LOT CLASSIFICATION - S1
INTENSITY OF TESTING - SCHEDULE F

THIS MATERIAL IS FREE FROM MERCURY, RADIUM OR ALPHA PARTICLE CONTAMINATION.

We hereby certify that the above material has been tested in accordance with the listed specification and is in conformance with all requirements.

ARCOS

Q.A. MANAGER
QUALITY ASSURANCE DEPARTMENT

67

Arcos Alloys

A Division of Hoskins Manufacturing Company
Mount Carmel, PA 17851

Stk
PO 43699

DATE 09/06/95

CERTIFICATION OF TESTS

ASME CERTIFICATE QSC-448
EXPIRATION DATE:OCT.23/96

SOLD TO:

RANOR, INC.
BELLA DRIVE
P.O. BOX 458
WESTMINSTER, MA 01473

SHIPPED TO:

SAME

ARCOS S.O. NO.	CUSTOMER ORDER NO.	CONSIGNEE ORDER NO.	DATE SHIPPED
57505	43699	N/A	09/06/95

ITEM	SIZE	GRADE	LOT NO./ALLOY NO.	QUANTITY
02	3/32 X 36"	ARCOS 308L	CT6824	50#

SPECIFICATION: ASME SFA 5.9 CLASS ER308L ASME SECTION II, PART C, ASME B&PVC SECTION III, SUBSECTION NB2400, 1992 EDITION, AND ALL PARAS AND ADDENDA THRU 1994 AND 10CFR21 APPLIES.

CHEMICAL ANALYSIS WIRE

C ✓	Mn ✓	Si ✓	S ✓	P ✓	Cr ✓	Ni ✓	Mo	Cb	Cb + Ta
.02	2.1	.43	.01	.02	20.1	9.9	.08		.016

Ta	Ti	Al	Co	Cu	Fe	V			
	.000			.03		.057			

ADDITIONAL TESTS RESULTS

Ferrite - Diagram: NB2433.1-1 11FN

Magna Gage: 9FN ✓

X-Ray _____

Bends _____

	As Welded	Heat Treated
Charpys:		
Tensiles:		
Yield		
Tensile		
Elong.		
Red. of Area		

OTHER INFORMATION LOT CLASSIFICATION - S1
INTENSITY OF TESTING - SCHEDULE F

THIS MATERIAL PROVIDED UNDER RANOR P.O. #43699 IS SUPPLIED IN COMPLIANCE WITH THE ARCOS Q.A. MANUAL REV. 12 DATED 12/13/93; WHICH IS IN COMPLIANCE WITH SUBARTICLE NCA 3800. THIS MATERIAL IS FREE FROM MERCURY, RADIUM OR ALPHA PARTICLE CONTAMINATION.

We hereby certify that the above material has been tested in accordance with the listed specification and is in conformance with all requirements.

9/18/95

ARCOS

Q.A. MANAGER

QUALITY ASSURANCE DEPARTMENT

68

SANDVIK Steel

We make Quality happen . . .

MATERIAL CERTIFICATE

SANDVIK STEEL COMPANY

P.O. BOX 1220, SCRANTON, PA. 18501 PH. (717) 587-5191

PLANT LOCATION: INTERSTATE 81, WAVERLY EXIT 59

Job 7300F M
PO 47602

SOLD TO: BOC GASES (AIRCO)
LISLE IL

SHIP TO: RANOR INC.
WESTMINSTER MA

CUSTOMER PURCHASE ORDER NO.: 43092

CERTIFICATE DATE: 10/18/96

SANDVIK ORDER NO.: 93512

QUANTITY: PER PACKING NOTE

WORK ORDER / LOT NO.: 957908

TAG:

AWS A-5.9

STAINLESS STEEL WELDING WIRE TYPE ER 308L DIAMETER: 1/16"

5437221

Filler Metal Analysis, %

Heat	C	Si	Mn	P	S	Cr	Ni
S437221	.011	.450	1.790	.020	.011	20.01	9.86

	Mo	Cb/Nb	Ta	Ti	Cu	Cb/Nb+Ta	N
	.220	.010		.005	.140		.056

The material has not come in contact with mercury or mercury-containing compounds.

"Material not touched by hand after final production process cleaning."

Material has been manufactured in accordance with Sandvik Steel Company Quality Manual Revision 10 dated October 1, 1995. Quality system approved to ISO-9002/ANSI/ASQC Q9002-1994.

Bengt H. Berg, Director, Quality and Metallurgy
Daniel Damiani, Quality Engineer

15(66119)(10)

IEJ 617 RANOR 11/4/96

(69)

SANDVIK Steel

We make Quality happen . . .

MATERIAL CERTIFICATE

SANDVIK STEEL COMPANY
P.O. BOX 1220, SCRANTON, PA. 18501 PH. (717) 587-5191
PLANT LOCATION: INTERSTATE 81, WAVERLY EXIT 59

Gf 7300FM

SOLD TO: BOC GASES (AIRCO)
LISLE IL

SHIP TO: RANOR Inc

CUSTOMER PURCHASE ORDER NO.: 48847

CERTIFICATE DATE: 10/03/96

SANDVIK ORDER NO.: 969030

QUANTITY: 190 LB

WORK ORDER / LOT NO.:

TAG:

AWS A-5.9

STAINLESS STEEL WELDING WIRE TYPE ER 308L

DIAMETER: 1/16"

Filler Metal Analysis, %

Heat	C	Si	Mn	P	S	Cr	Ni
S437864	.013	.430	1.720	.020	.013	19.88	9.98

	Mo	Cb/Nb	Ta	Ti	Cu	Cb/Nb+Ta	N
	.250	.010	—	.005	.150		.055

S437864

The material has not come in contact with mercury or mercury-containing compounds.

"Material not touched by hand after final production process cleaning."

Material has been manufactured in accordance with Sandvik Steel Company Quality Manual Revision 10 dated October 1, 1995. Quality system approved to ISO-9002/ANSI/ASQC Q9002-1994.

Bengt H. Berg, Director, Quality and Metallurgy
Daniel Damiani, Quality Engineer

15(661(9)(10)

2/17/97

BOC GASES
90 RESEARCH ROAD
HINGHAM, MA 02043

70

SANDVIK Steel

We make Quality happen . . .

MATERIAL CERTIFICATE

SANDVIK STEEL COMPANY
P.O. BOX 1220, SCRANTON, PA. 18501 PH. (717) 587-5191
PLANT LOCATION: INTERSTATE 81, WAVERLY EXIT 59

JF 7300FM
PO 47602

SOLD TO: BOC GASES (AIRCO)
LISLE IL

SHIP TO: AIRCO-NEW ENGLAND
HINGHAM MA
RAWOR INC
WESTMINSTER MA

CUSTOMER PURCHASE ORDER NO.:

CERTIFICATE DATE: 10/04/96

SANDVIK ORDER NO.: 92899

QUANTITY: PER PACKING NOTE

WORK ORDER / LOT NO.: 969029

TAG:

AWS A-5.9

STAINLESS STEEL WELDING WIRE TYPE ER 308L

DIAMETER: .045"

5437864

Filler Metal Analysis, %

Heat	C	Si	Mn	P	S	Cr	Ni
S437864	.013	.430	1.720	.020	.013	19.88	9.98

	Mo	Cb/Nb	Ta	Ti	Cu	Cb/Nb+Ta	N
	.250	.010		.005	.150		.055

The material has not come in contact with mercury or mercury-containing compounds.

"Material not touched by hand after final production process cleaning."

Material has been manufactured in accordance with Sandvik Steel Company Quality Manual Revision 10 dated October 1, 1995. Quality system approved to ISO-9002/ANSI/ASQC Q9002-1994.

TEJ 617 RAWOR 10/16/96

BOC GASES
90 RESEARCH ROAD
HINGHAM, MA 02043

Bengt H. Berg, Director, Quality and Metallurgy
Daniel Damiani, Quality Engineer

15(66119)(10)

5

71

Tsubishi HC-8

1/8-1/9/97

For: Ranor

CONSULTING
Precision Laser Measurement Services

253 MILLER ROAD, BETHANY, CT 06524 • (203) 393-3344

AXIS	2 Runs ORIGINAL ACCURACY DATE: 1/9/97	ACCURACY AFTER COMPENSATION - 2 RUNS	6 Runs REPEATABILITY RUNS
X	-.002534" / +.026104" (.028638")	-.002195" / +.002331" (.004526")	-.002195" / +.002341" (.004536")
Y	-.000004" / +.005021" (.005025")	-.000818" / +.000087" (.000905")	-.001184" / +.000130" (.001314")
Z	-.002840" / +.000163" (.003003")	-.000242" / +.000416" (.000658")	-.000242" / +.000532" (.000774")
W	-.001184" / +.000026" (.001210")	-.000082" / +.000540" (.000622")	-.000147" / +.000540" (.000687")
U_{Table}	-.000104" / +.018008" (.018112")	-0 / +.001301" (.001301")	-0 / +.001436" (.001436")
B	-3.0 Arc Sec / +.05 Arc Sec (3.05 Arc Sec)	-	

(22)

D.R.W
CONSULTING
Precision Laser Measurement Services

253 MILLER ROAD • BETHANY, CT 06524 • (203) 393-3344

JANUARY13,1997

RANOR, INC.
BELLA DR., PO BOX 458
WEST MINSTER, MA 01473
ATTENTION: PAUL WATTS

THIS CERTIFIES THAT THE FOLLOWING MACHINE TOOL HAS BEEN CALIBRATED BY D.R.W. CONSULTING IN COMPLIANCE WITH THE HEWLETT-PACKARD USER'S GUIDE FOR THE HP LASER SYSTEM, HP PART NO. 05528-90010 (PRINTED APRIL 1984); SECTION 6, DISTANCE MEASUREMENT.

MACHINE TOOL CALIBRATED

MITSUBISHI HC-8

THE CALIBRATION OF OUR INSTRUMENTS ARE TRACEABLE TO THE NATIONAL INSTITUTE OF STANDARDS AND TECHNOLOGY, AS REQUIRED; AND AS RECORDED ON THE APPROPRIATE CERTIFICATES OF CALIBRATION IDENTIFIED BELOW (NIST REFERENCES SHOWN WHERE APPLICABLE).

	INSTRUMENT CALIBRATION			
DESCRIPTION	SERIAL NUMBER	CALIBRATED	DATE DUE	NIST REFERENCE
AIR SENSOR MODEL #10751A	2452A00562	6/18/96	6/18/97	FS 25743
LASER HEAD MODEL #5518A	2532A01322	6/18/96	6/18/97	FS 25743
MATERIAL SENSOR	2415A00682	6/18/96	6/18/97	FS 25743
MATERIAL SENSOR	3216A00340	4/26/96	4/26/97	FS 25743
TRU-STONE SQUARE	23235	10/29/96	10/29/97	821/253616-94
ULTRADEX MODEL C-10755-1	1596	9/18/95	9/18/97	0297-930734

CERTIFICATION OF THE ABOVE MACHINE TOOLS IS SHOWN ON THE D.R.W. CONSULTING CERTIFICATE OF ACCURACY. ONE COPY THE CERTIFICATE OF ACCURACY IS ATTACHED TO THE CALIBRATED MACHINE TOOL, ADJACENT TO THE CALIBRATION LABEL; A SECOND COPY OF THE CERTIFICATE OF ACCURACY IS ATTACHED TO THE MACHINE TOOL CALIBRATION FOLDER.

IN THE EVENT THAT ANY DEVIATIONS ARE FOUND IN PREVIOUSLY REPORTED DATA; OR DEVIATIONS IN MEASUREMENT AND TEST EQUIPMENT OR STANDARDS USED TO DETERMINE REPORTED DATA IS FOUND, D.R.W CONSULTING SHALL NOTIFY RANOR, INC. IN WRITING OF THE SAME FOR EVALUATION TO 10 CFR PART 21

CERTIFIED BY: Mark Watts DATE: 01-13-97

VERIFIED CONTROLS & RECORDERS
50 Alma Street
Lowell, MA 01854
(508) 453-8241

Certificate of Calibration

Ranor, Inc.
Bella Drive; P.O. Box 458
Westminster, MA 01473
Attention: Quality Control Department

Purchase Order No. 47710

On 9-23-96, your instruments were checked against our Beckman Model Number 473, Serial Number 8110036, which was calibrated on 9-17-96, and is due again on 9-17-97. The calibration of our instrument is traceable to the National Institute of Standards and Technology. The Calibration Services provided under Ranor Purchase Order Number 47710 are supplied in compliance with Verified Controls and Recorders Procedure Number MICE-1, Revision 1 (6-18-87), Calibration of Measurement and Instrument Control Equipment as audited and accepted by Ranor, Inc. Your calibrated instruments currently have an overall error limit that is within the Manufacturer's Specifications. If an instrument was found to exceed the specified error limit, and adjusted and recalibrated; an asterik (*) will appear to the right of the error column. In the event that any deviations are found in previously reported data; or deviations in Measurement and Test Equipment or standards used to determine reported data is found, Verified Controls & Recorders shall notify Ranor, Inc. in writing of the same for evaluation in accordance with 10 CFR Part 21.

INSTRUMENT CALIBRATION

	INSTRUMENT DESCRIPTION	CALIBRATION SETTING	INSTRUMENT READING	ERROR (DEGREES)
Make/Model:	L&N Speedomax Recorder - Multipoint	100°F	99°F	-1°F
Serial No:	79-32765-5-1	1000°F	1000°F	-°F
Identification:	Ranor Serial No. 404	1900°F	1902°F	+2°F
Make/Model:	L&N Speedomax Recorder-W. Left	100°F	105°F	+5°F
Serial No:	E79-32765-1-1	1000°F	1000°F	-°F
Identification:	Ranor Serial No. 400	1900°F	1895°F	-5°F
Make/Model:	L&N Speedomax Recorder-W. Right	100°F	100°F	-°F
Serial No:	E79-32765-1-2	1000°F	1000°F	-°F
Identification:	Ranor Serial No. 401	1900°F	1897°F	-3°F
Make/Model:	Athena Model 2000-L Controller-E. Max Left	100°F	102°F	+2°F
Serial No:	750471 (*)	1000°F	1002°F	+2°F
Identification:	Ranor Serial No. 402	1900°F	1902°F	+2°F
Make/Model:	Athena Model 2000-L Controller-E. Max Right	100°F	104°F	+4°F
Serial No:	750472 (*)	1000°F	1005°F	+5°F
Identification:	Ranor Serial No. 403	1900°F	1904°F	+4°F
Make/Model:	Honeywell 12 Pt. Portable Recorder	100°F	100°F	-°F
Serial No:	---	1000°F	1000°F	-°F
Identification:	Ranor Serial No. 408	1900°F	1900°F	-°F

VERIFIED CONTROLS & RECORDERS
50 Alma Street
Lowell, MA 01854
(508) 453-8241

Certificate of Calibration

Ranor, Inc.
Bella Drive; P.O. Box 458
Westminster, MA 01473
Attention: Quality Control Department

Purchase Order No. 47710

INSTRUMENT CALIBRATION

	INSTRUMENT DESCRIPTION	CALIBRATION SETTING	INSTRUMENT READING	ERROR (DEGREES)
Make/Model:	Honeywell 24 Pt. Portable Recorder	100°F	100°F	-°F
Serial No:	T-HCR-1	1000°F	1000°F	-°F
Identification:	Ranor Serial No. 409	1900°F	1900°F	-°F
Make/Model:	Fluke Digital Thermometer	500°F	497°F	-3°F
Serial No:	5090029 ('K' Tc)	1000°F	996°F	-4°F
Identification:	Ranor Serial No. T-29	1900°F	1895°F	-5°F
Make/Model:	Fluke Digital Thermometer	500°F	499°F	-1°F
Serial No:	5500685 ('K' Tc)	1000°F	996°F	-4°F
Identification:	Ranor Serial No. T-85	1900°F	1892°F	-8°F
Make/Model:	Fluke Digital Thermometer	500°F	497°F	-3°F
Serial No:	5500687 ('K' Tc)	1000°F	996°F	-4°F
Identification:	Ranor Serial No. T-87	1900°F	1893°F	-7°F
Make/Model:	Fluke Digital Thermometer	500°F	498°F	-2°F
Serial No:	5500688 ('K' Tc)	1000°F	995°F	-5°F
Identification:	Ranor Serial No. T-88	1900°F	1896°F	-4°F

Signature: David Britton

Date: 9-23-96

PROG: JC4100

USER: DRB

PRODUCTION

Parent Level

All Units

ROUTING SHEET

--- SHOP COPY ---

PAGE: 1
DATE: 12/1(
TIME: 15.0(

COMPANY: 1 RANOR, INC.

JOB/LOT NUMBER	JOB DESC.	PART NUMBER	PART DESCRIPTION	- CODES - REV #	JOB USER	CUSTOMER P.O. N
7300FM	LIGO VACUMM CHAMBER	V049-4-101	PSI BEAM SPLITTER CHAMBERS			555822

ORDER QTY	PROD QTY	U/M
15	15	EA

BILL TO: 16543/00
PROCESS SYSTEMS INTERNATIONAL
ACCOUNTS PAYABLE
20 WALKUP DRIVE
WESTBOROUGH MA 01581-5003

CONTACT: Kristin/Payables
TERMS: 01 1/2% 10, NET 30
SLS: TZ Tom Ziobrowski
REG: 01 Massachusetts

DATES	ORDER	REQ.SHIP	PROD START	PROD DUE
	8/26/96	2/15/97	1/15/96	2/14/97

OPERATIONS:

SEQ	W/C	OPR	DESCRIPTION	DPT	PCS/ASY	OP. QTY	OVERLAP	S/U STD	PROD STD	PROD HRS	START	DUE	IN
			THIS IS THE PARENT LEVEL, THIS LEVEL IS FOR ALL FINAL ASSEMBLY, CLEANING, & SHIPPING OF THE COMPLETED CHAMBER ASSEMBLIES CONSISTING OF										
			1X, LOWER BEAM SPLITTER CHAMBER PER DWG: V049-4-101										
			1X, UPPER BEAM SPLITTER CHAMBER PER DWG: V049-4-101										
			THIS LEVEL ALSO CONSISTS OF MODIFICATIONS TO A P.S.I. SUPPLIED SHIPPING SKID.										
5	EF1	010	LAY OUT	EF	1.00	15		.00		40.00	2/14/97	2/14/97	CC
10	SH1	100	Shear Per B.O.M.	SH	1.00	15		.00		3.00			
			SHEAR PARTS PER B.O.M., & SKETCHES.										
			BY: _____ DATE: _____										
20	S01	150	Saw Cut	SW	1.00	15		.00		4.00			
			SAW PARTS PER B.O.M.										
			BY: _____ DATE: _____										
30	FC1	050	Thermal Cut	FC	1.00	15		.00		2.00			
			F/C ITEM No. 1 per B.O.M., & DNC.										
			BY: Rog- DATE: 12-17-96										
40	PB1	250	Forming per sketch	PB	1.00	15		.00		4.00			
			FORM THE 1/8" ALUM. LINER, & 1/2" STEEL PLATE PER SKETCHES.										

COMPANY: 1 RANOR, INC.

JOB/LOT NUMBER	JOB DESC.	PART NUMBER	PART DESCRIPTION	- CODES - REV # JOB USER	CUSTOMER P.O. N
7300FM	LIGO VACUMM CHAMBER	V049-4-101	PSI BEAM SPLITTER CHAMBERS		555822

OPERATIONS:

SEQ	W/C	OPR	DESCRIPTION	DPT	PCS/ASY	OP. QTY	OVERLAP	S/U STD	PROD STD	PROD HRS	START	DUE	IN
			BY: _____ DATE: _____										
50	M1	615	Machine per print	MI	1.00		15	.00		4.00			
			MACHINE 1 1/8" DIA. CLEARANCE HOLES IN ITEM NO.6 6" ON CENTER FOR 1" HARDWARE.										
			BY: _____ DATE: _____										
60	AF1	400	Welding Assembly-Fitting	AS	1.00		15	.00		6.00			
			ASSEMBLE PARTS PER ASSEMBLY SKETCHES.										
			WELD TABS ITEM #5 TO THE EDGES OF ITEM NO. 4 TO CLIP TO ITEM NO 6.										
			BY: _____ DATE: _____										
80	WE1	473	GMAW - Other	WE	1.00		15	.00		8.00			
			WELD ASSEMBLY CRADLES COMPLETE PER SKETCHES.										
			BY: _____ DATE: _____										
100	FN1	480	Clean Welds & Spatters	FN	1.00		15	.00		2.50			
			BY: _____ DATE: _____										
150	AM1	795	Mechanical Assembly	DE	1.00		15	.00		10.00			
			PREPARE PART FOR FINAL INSPECTION, & shippment.										
			BY: _____ DATE: _____										
170	HC8	585	Dimensional Inspection	HB	1.00		15	.00		8.00			
			INSPECT PART COMPLETE PER CUSTOMER SUPPLIED INSPECTION PLAN (ON A N/C MACHINE).										
			BY: _____ DATE: _____										
190	FN1	500	STEAM CLEANING	FN	1.00		15	.00		4.00			
			FINAL CLEAN PART COMPLETE										

PROG: JC4100

USER: DRB

ROUTING SHEET

--- SHOP COPY ---

COMPANY: 1 RANOR, INC.

JOB/LOT NUMBER	JOB DESC.	PART NUMBER	PART DESCRIPTION	- CODES - REV #	JOB USER	CUSTOMER P.O. N
7300FM	LIGO VACUMM CHAMBER	V049-4-101 PSI	BEAM SPLITTER CHAMBERS			555822

OPERATIONS:

SEQ	W/C	OPR	DESCRIPTION	DPT	PCS/ASY	OP. QTY	OVERLAP	S/U STD	PROD STD	PROD HRS	START	DUE	IN
			BY: _____ DATE: _____										
220	Z00	525	Packaging	FN	1.00	15		.00		8.00			
			PACKAGE, & PROTECT FOR SHIPMENT.										
			BY: _____ DATE: _____										

COMPANY: 1 RANOR, INC.

JOB/LOT NUMBER	JOB DESC.	PART NUMBER	PART DESCRIPTION	- CODES - REV # JOB USER	CUSTOMER P.O.
7300FM	LIGO VACUMM CHAMBER	V049-4-101	PSI BEAM SPLITTER CHAMBERS		555822

LEVEL OF ASSY: 1 REV	PART NUMBER	PART DESCRIPTION	PROD QTY	START DATE	DUE DATE	PARENT LEVEL
	V049-4-101 LEV 1	P.S.I. LOWER CHAMBER	15	1/07/97	2/14/97	

OPERATIONS:

SEQ	W/C	OPR	DESCRIPTION	DPT	PCS/ASY	OP. QTY	OVERLAP	S/U STD	PROD STD	PROD HRS	START	DUE	IN

.
.
THIS IS LEVEL 1. THIS LEVEL IS TO BE USED FOR THE
FABRICATION OF THE LOWER SHELL ASSEMBLY PER DRAWING
V049-4-003 SHEET# 1.
.
WELDING ON THIS JOB MUST BE DONE BY QUALIFIED WELDERS ONLY.
WELDING WILL BE DONE BY GTAW AND PAW WELD PROCEDURES
LISTED ON EACH OF THE WELD MAPS. ALL WELDS WILL BE
100% VISUALY INSPECTED.
.
NO AIR TOOLS CAN BE USED FOR PROCESSING THIS MATERIAL.
USE ONLY ELECTRIC TOOLS. GRINDING IS ALLOWED PROVIDED
THE GROUND EDGE IS CLEANED WITH A CARBIDE BURR. PLASMA
EDGES MUST ALSO BE CLEANED WITH CARBIDE BURRS.
.
ALL MATERAILS ARE BEING SUPPLIED BY THE CUSTOMER.
.
MATERIAL: 304 L STAINLESS STEEL.
.
USE ONLY CLEAN CINCINNATI MILICRON CIMTECK 410 FOR
MACHINE COOLANT.
.
USE ONLY " OAKITE " IMPRO -CLEAN 1300 FOR PRESSURE WASHING
MATERIAL, FOLLOWED BY CLEAN STEAM.
.
REFER TO THE LEVELS BELOW FOR COMPONENT PART FABRICATION.
.
LEV 1A: LOWER SHELL
LEV 1B: LOWER HEAD (ITEM NO 1)
LEV 1C: MISC. ASSEMBLY PARTS. (see lev.1C B.O.M.)
LEV 1D: FLANGE ASSEMBLY MACHINING (items 9b,10, 11, 13)
LEV 1E: 60" LOWER SHELL PORTS.
.
.

SEQ	W/C	OPR	DESCRIPTION	DPT	PCS/ASY	OP. QTY	OVERLAP	S/U STD	PROD STD	PROD HRS	START	DUE	IN
10	EF1	010	LAY OUT	EF	1.00	15		.00		10.00	1/07/97	1/07/97	
15	AF1	400	Welding Assembly-Fitting	AS	1.00	15		.00		5.00	1/07/97	1/07/97	

.
INSTALL THE LOWER CYLINDER FIXTURE FOR THE FOLLOWING
OPERATION.
.
INSTALL THE MODIFIED CUSTOMER SPIDERS IN THE LOWER

PROG: JC4100 PRODUCTION ROUTING SHEET PAGE: 3
USER: DRB --- SHOP COPY --- DATE: 11/1
TIME: 9.3

COMPANY: 1 RANOR, INC.

JOB/LOT NUMBER	JOB DESC.	PART NUMBER	PART DESCRIPTION	- CODES - REV #	JOB USER	CUSTOMER P.O.
7300FM	LIGO VACUMM CHAMBER	V049-4-101	PSI BEAM SPLITTER CHAMBERS			555822

LEVEL OF ASSY:	REV	PART NUMBER	PART DESCRIPTION	PROD QTY	START DATE	DUE DATE	PARENT LEVEL
1		V049-4-101 LEV 1	P.S.I. LOWER CHAMBER	15	1/07/97	2/14/97	

OPERATIONS:

SEQ	W/C	OPR	DESCRIPTION	DPT	PCS/ASY	OP. QTY	OVERLAP	S/U STD	PROD STD	PROD HRS	START	DUE	IN

CYLINDER AND REROUND TO WITHIN 1/8".

CHECK ROUNDNESS BY ST DATE 11/9/96

USING THE UPPER FIXTURE, REROUND THE TOP OF THE LOWER CYLINDER TO WITHIN 1/8".

CHECK ROUNDNESS BY ST DATE 11/9/96

FITUP PT# 1 (LOWER HEAD) TO PT# 3 (LOWER SHELL).
SEE DWG# V049-4-003 SHEET# 1 DETAIL: 3.

USING THE MODIFIED SPIDER, REROUND THE LOWER CYLINDER HEAD TO FIT THE LOWER CYLINDER.

BY ST DATE 11/9/96

FORMAN TO CHECK FITUP BY JAB DATE 11/11/96

20	QC2	573	Visual Inspection	QC	1.00	15		.00		1.00	1/07/97	1/07/97

INSPECTION OF THE CYLINDER TO THE HEAD FITUP IS REQUIRED.

INSPECTION OF THE ROUNDNESS IS REQUIRED. ROUNDNESS W/IN 1/8

INSPECTED BY: (RANOR Q.C.) [signature] DATE: 11/11/96

INSPECTED BY: (P.S.I.) [signature] DATE 11-14-96

REFERENCE P.S.I. QUALITY PLAN SEQ I

25	WE1	466	WELDING SEQUENCE.	WE	1.00	15		.00		16.00	1/07/97	1/08/97

WELD THE HEAD TO CYLINDER COMPLETE PER THE DRAWING AND THE WELD MAPS.
READ ALL WELDING NOTES ON THE WELD MAPS.

USE ONLY APPROPRATE WELDING PROCEDURE LISTED ON THE WELD MAP

COMPLETE THE WELD MAPS.
NOTIFY QC FOR THE VT INSPECTION OF THE WELDS.

PROG: JC4100
USER: DRB

PRODUCTION

ROUTING SHEET
--- SHOP COPY ---

PAGE: 4
DATE: 11/11
TIME: 9.35

COMPANY: 1 RANOR, INC.

JOB/LOT NUMBER	JOB DESC.	PART NUMBER	PART DESCRIPTION	REV	- CODES - #	JOB USER	CUSTOMER P.O. N
7300FM	LIGO VACUMM CHAMBER	V049-4-101	PSI BEAM SPLITTER CHAMBERS				555822

LEVEL OF ASSY:	REV	PART NUMBER	PART DESCRIPTION	PROD QTY	START DATE	DUE DATE	PARENT LEVEL
1		V049-4-101 LEV 1	P.S.I. LOWER CHAMBER	15	1/07/97	2/14/97	

OPERATIONS:

SEQ	W/C	OPR	DESCRIPTION	DPT	PCS/ASY	OP. QTY	OVERLAP	S/U STD	PROD STD	PROD HRS	START	DUE	IN

BY_____ DATE_____

CHECK WELDS BY FS DATE 11-15-96

30 QC2 573 Visual Inspection QC 1.00 15 .00 2.00 1/08/97 1/08/97

100% VISUAL INSPECTION OF THE WELDS IS REQUIRED.

COMPLETE VISUAL INSPECTION REPORT.

INSPECTED BY: (RANOR Q.C.) FS DATE: 11-15-96

REFERENCE P.S.I. QUALITY PLAN SEQ. I

35 AF1 250 ROUNDNESS INSPECTION. AS 1.00 15 .00 4.00 1/08/97 1/09/97

THIS SEQUENCE IS TO BE USED FOR CHECKING THE ROUNDNESS OF THE LOWER CYLINDER SUBASSEMBLY.

CHECK ROUNDNESS. ROUND WITHIN 1/8"
CHECKED BY SI DATE 11/19/96

REROUND THE SUBASSEMBLY TO WITHIN 1/8".

BY SI DATE 11/19/96

60 AF1 400 Welding Assembly-Fitting AS 1.00 15 .00 15.00 1/09/97 1/10/97

INSTALL THE 60" PORT FIXTURES ON THE I.D. OF THE CYLINDER.

TRIAL FIT THE 60" DIA. PORTS TO EACH OF THE LOCATIONS.
INSPECT THE FITUP ON EACH OF THE PORTS.

CUT-OUT 59 1/2" ROUGH OPENINGS, & RE-CHECK THE FIT-UP OF AT LEAST ONE OF THE 60" DIA PORT.

BY: SI DATE: 11-19-96

********** SEND TO THE MACHINE SHOP **********
SEND THE CYLINDER ASSEMBLY TO THE MACHINE SHOP.

PROG: JC4100

USER: DRB

ROUTING SHEET

--- SHOP COPY ---

PAGE: 5
DATE: 11/1
TIME: 9.3

COMPANY: 1 RANOR, INC.

JOB/LOT NUMBER	JOB DESC.	PART NUMBER	PART DESCRIPTION	- CODES - REV #	JOB USER	CUSTOMER P.O.
7300FM	LIGO VACUMM CHAMBER	V049-4-101	PSI BEAM SPLITTER CHAMBERS			555822

LEVEL OF ASSY:	REV	PART NUMBER	PART DESCRIPTION	PROD QTY	START DATE	DUE DATE	PARENT LEVEL
1		V049-4-101 LEV 1	P.S.I. LOWER CHAMBER	15	1/07/97	2/14/97	

OPERATIONS:

SEQ	W/C	OPR	DESCRIPTION	DPT	PCS/ASY	OP. QTY	OVERLAP	S/U STD	PROD STD	PROD HRS	START	DUE	IN
70	EM1	600	Programming	EM	1.00	15		.00		8.00	1/10/97	1/10/97	

PROGRAM TO MACHINE THE 60" PORT OPENINGS, 1/2" EXTRA STOCK HAS BEEN ALLOWED ON THE I.D. FOR MACHINING.

LAYOUT ON THE MACHINE THE 1/2" EXTRA STOCK ON THE TOP FLANGE END, AND THE LOCATION (center line) OF THE OUTSIDE ATTACHMENTS.

BY_____ DATE_____

SEQ	W/C	OPR	DESCRIPTION	DPT	PCS/ASY	OP. QTY	OVERLAP	S/U STD	PROD STD	PROD HRS	START	DUE	IN
75	HC8	615	Machine per print	HB	1.00	15		.00		20.00	1/10/97	1/13/97	

MACHINE THE 60" PORT LOCATIONS PER THE MACHINE SHOP OPERATIONS SHEET AND INSTRUCTIONS. MACHINE THIS FEATURE TO SIZE PER DRAWING (60.50" DIA.)

LAYOUT ALL OUTSIDE ATTACHEMENTS AND THE EXTRA STOCK ON THE TOP SURFACE OF THE SHELL.
FEATURES TO INCLUDE:

. THE CENTER LINE AND CORNERS OF THE 4 STAND MOUNTING PADS, ITEM 20.

SCRIBE LAYOUT LINES APPROX. 3/8" LONG WITH CARBIDE AT 4 LOCATIONS , 0, 90, 180, 270,DEG. FOR THE 60" PORTS.

BY DR DATE 11/20/96

SEQ	W/C	OPR	DESCRIPTION	DPT	PCS/ASY	OP. QTY	OVERLAP	S/U STD	PROD STD	PROD HRS	START	DUE	IN
80	DE1	770	Deburring	DE	1.00	15		.00		4.00	1/13/97	1/13/97	

DEBURR EDGES, DO NOT ROUND OVER OR HEAVY CHAMFER

USE ONLY ELECTRIC TOOLS WITH CARBIDE BURRS FOR DEBURRING.

BY: DB DATE: 11/25/96

SEQ	W/C	OPR	DESCRIPTION	DPT	PCS/ASY	OP. QTY	OVERLAP	S/U STD	PROD STD	PROD HRS	START	DUE	IN
85	QC3	585	Dimensional Inspection	QC	1.00	15		.00		4.00	1/13/97	1/14/97	

DIMENSIONAL INSPECTION OF THE FOLLOWING ITEMS IS REQUIRED:

INSPECT THE 60"PORT LOCATIONS PER DWG# V049-4-003.

PROG: JC4100 **PRODUCTION** ROUTING SHEET PAGE: 6
USER: DRB --- SHOP COPY --- DATE: 11/11
TIME: 9.35

COMPANY: 1 RANOR, INC.

JOB/LOT NUMBER	JOB DESC.	PART NUMBER	PART DESCRIPTION	REV #	- CODES - JOB USER	CUSTOMER P.O. N
7300FM	LIGO VACUMM CHAMBER	V049-4-101	PSI BEAM SPLITTER CHAMBERS			555822

LEVEL OF ASSY:	REV	PART NUMBER	PART DESCRIPTION	PROD QTY	START DATE	DUE DATE	PARENT LEVEI
1		V049-4-101 LEV 1	P.S.I. LOWER CHAMBER	15	1/07/97	2/14/97	

OPERATIONS:

SEQ	W/C	OPR	DESCRIPTION	DPT	PCS/ASY	OP. QTY	OVERLAP	S/U STD	PROD STD	PROD HRS	START	DUE	IN

INSPECT THE LAYOUT LOCATIONS FOR THE SUPPORT PAD LOCATIONS.

INSPECT THE EXTRA STOCK LAYOUT ON THE TOP OF THE SHELL.

INSPECTED BY: (RANOR Q.C.) RJR DATE: 11-20-96 (+ 3/4)

REFERENCE P.S.I. QUALITY PLAN SEQ. L

********** SEND TO THE FAB SHOP **********

90 FN1 500 STEAM CLEANING FN 1.00 15 .00 2.00 1/14/97 1/14/97

STEAM CLEAN WITH " OAKITE " IMPRO-CLEAN 1300 AND FOLLOW WITH PURE STEAM.

BY: JB DATE: 11/26/96

95 AF1 400 Welding Assembly-Fitting AS 1.00 15 .00 20.00 1/14/97 1/15/97

INSPECT THE ROUNDNESS OF THE CYLINDER ASSEMBLY. ROUNDNESS MUST BE WITHIN 1/8".

CHECK ROUNDNESS BY SL DATE 11/22/96

FITUP PART# 12 (60" PORTS) TO THE LOWER SHELL. BRACE AND FIXTURE THE ASSEMBLY AS REQUIRED FOR WELDING. SEE DWG# V049-4-003, SHEET# 1 DETAIL: 3.

NOTE: HAVE THE LOCATIONS BEHIND PT# 16 (STIFFINING RING) WELDED. ✓

FITUP AND TACK PART# 16 (STIFFINING RING) TO THE SHELL SUBASSEMBLY. ✓

FITUP AND TACK PART# 15 (SHELL STIFFINER) TO THE SHELL ✓

FITUP AND TACK THE SUPPORT PAD SUBASSEMBLIES (PT# 20 & 55) TO THE SHELL. SEE DWG# V049-4-101 FOR THE FITUP DIMENSIONS.

NOTE: THE OUTSIDE OF THE SHELL HAS BEEN SCRIBED FOR THE LOCATIONS OF THE PARTS.

PROG: JC4100 **PRODUCTION** ROUTING SHEET PAGE: 7
USER: DRB --- SHOP COPY --- DATE: 11/1
TIME: 9.3

COMPANY: 1 RANOR, INC.

JOB/LOT NUMBER	JOB DESC.	PART NUMBER	PART DESCRIPTION	- CODES - REV # JOB USER	CUSTOMER P.O.
7300FM	LIGO VACUMM CHAMBER	V049-4-101	PSI BEAM SPLITTER CHAMBERS		555822

LEVEL OF ASSY:	REV	PART NUMBER	PART DESCRIPTION	PROD QTY	START DATE	DUE DATE	PARENT LEVEL
1		V049-4-101 LEV 1	P.S.I. LOWER CHAMBER	15	1/07/97	2/14/97	

OPERATIONS:

SEQ	W/C	OPR	DESCRIPTION	DPT	PCS/ASY	OP. QTY	OVERLAP	S/U STD	PROD STD	PROD HRS	START	DUE	IN

BY SI DATE 11/27/96

FORMAN TO CHECK FITUP BY JAB DATE 11-27-96

100 WE1 466 GTAW-SS / PAW — WE 1.00 15 .00 40.00 1/15/97 1/17/97

WELD THE SHELL SUBASSEMBLY COMPLETE PER THE DRAWING
AND THE WELD MAPS.
COMPLETE EACH OF THE WELD MAPS.

READ ALL NOTES ON THE WELD MAPS.

NOTIFY QC FOR THE VISUAL INSPECTION OF THE WELDS.

BY [signature] DATE 12-22-96

105 QC2 585 VISUAL INSPECTION. — QC 1.00 15 .00 10.00 1/17/97 1/20/97

100% VISUAL INSPECTION OF THE WELDED LOWER SHELL SUBASSEMBLY

COMPLETE THE VISUAL INSPECTION REPORT.

INSPECTED BY: (RANOR Q.C.) [signature] DATE: 12-27-96

INSPECTED BY: (P.S.I.) [signature] DATE 12-19-96

110 AF1 400 Welding Assembly-Fitting — AS 1.00 15 .00 12.00 1/20/97 1/20/97

REMOVE THE UPPER SHELL REROUNDING FIXTURE.

FITUP AND TACK THE FOLLOWING INTERNAL PARTS:

12 PC'S PART# 21B (UPPER INTERNAL ATTACHMENT BRACKETS). ✓

12 PC'S PART# 21A (LOWER INTERNAL ATTACHMENT BRACKETS). ✓

4 PC'S PART# 22 (PLATFORM ATTACHMENT PLATES). ✓

18 PC'S PART# 52 (INTERNAL SUPPORT RING BRACKETS). ✓

2 PC'S PART# 51 (PLATFORM SUPPORT RING). ✓

PROG: JC4100 PRODUCTION

USER: DRB

ROUTING SHEET

--- SHOP COPY ---

COMPANY: 1 RANOR, INC.

JOB/LOT NUMBER	JOB DESC.	PART NUMBER	PART DESCRIPTION	REV	- CODES - #	JOB USER	CUSTOMER P.O. N
7300FM	LIGO VACUMM CHAMBER	V049-4-101	PSI BEAM SPLITTER CHAMBERS				555822

LEVEL OF ASSY:	REV	PART NUMBER	PART DESCRIPTION	PROD QTY	START DATE	DUE DATE	PARENT LEVEL
1		V049-4-101 LEV 1	P.S.I. LOWER CHAMBER	15	1/07/97	2/14/97	

OPERATIONS:

SEQ	W/C	OPR	DESCRIPTION	DPT	PCS/ASY	OP. QTY	OVERLAP	S/U STD	PROD STD	PROD HRS	START	DUE	IN

BY SF DATE 1/15/97

FORMAN TO CHECK FITUP BY JAB DATE 1-15-97

115 WE1 466 WELDING SEQUENCE. WE 1.00 15 .00 30.00 1/21/97 1/22/97

WELD THE INTERNAL PARTS COMPLETE PER THE WELD MAPS AND THE DRAWING.

SIGN OFF EACH OF THE WELD MAPS.
READ ALL NOTES ON THE WELD MAPS.

BY: W DATE: 1/17/97

120 QC2 573 Visual Inspection QC 1.00 15 .00 4.00 1/22/97 1/22/97

100% VISUAL INSPECTION OF ALL INTERNAL WELDS IS REQUIRED.
COMPLETE THE VISUAL INSPECTION REPORT.

INSPECTED BY: (RANOR Q.C.) [signature] DATE: 2-4-97

REF. P.S.I. QUALITY PLAN SEQ. Q.

130 FN1 500 SPOT PASSIVATE FN 1.00 15 .00 8.00 1/22/97 1/23/97

READ THE MANUFACTURERS TECK DATA SHEETS 1 THRU 4 PRIOR TO APPLYING SOLUTION. USE APPROPRIATE MATERIAL HANDLING AND PROTECTIVE GEAR WHILE USING THE SOLUTION.

SPOT PASSIVAT THE I.D. USING CAL- CLEAN 76-2x

APPLY PER MANUFACTURERS INSTRUCTIONS. APPLY TO RUSTED AREAS ONLY.

SAFETY EQUIPMENT TO INCLUDE THE FOLLOWING:

ACID/CHEMICAL GOGGLES GLOVES
FACE SHIELD DISPOSABLE BUG SPRAYER

BY: [signature] DATE: 12-17-96

133 AF1 400 ROUNDNESS INSPECTION. AS 1.00 15 .00 2.00 1/23/97 1/23/97

PROG: JC4100 PRODUCTION

USER: DRB

ROUTING SHEET

--- SHOP COPY ---

COMPANY: 1 RANOR, INC.

JOB/LOT NUMBER	JOB DESC.	PART NUMBER	PART DESCRIPTION	REV	- CODES - #	JOB USER	CUSTOMER P.O. N
7300FM	LIGO VACUMM CHAMBER	V049-4-101	PSI BEAM SPLITTER CHAMBERS				555822

LEVEL OF ASSY:	REV	PART NUMBER	PART DESCRIPTION	PROD QTY	START DATE	DUE DATE	PARENT LEVEI
1		V049-4-101 LEV 1	P.S.I. LOWER CHAMBER	15	1/07/97	2/14/97	

OPERATIONS:

SEQ	W/C	OPR	DESCRIPTION	DPT	PCS/ASY	OP. QTY	OVERLAP	S/U STD	PROD STD	PROD HRS	START	DUE	IN
			. INSPECTION OF THE ROUNDNESS ON THE LOWER SHELL ASSEMBLY IS REQUIRED BEFORE STRESS RELIEVING. . ROUNDNESS OF THE SHELL IS TO BE WITHIN 1/8". . BY JAB DATE 12-17-96 .										
135	FN1	500	STEAM CLEANING	FN	1.00	15		.00		4.00	1/23/97	1/23/97	
			STEAM CLEAN PER P.S.I. PROCEDURE # 049-2-046, step 4.1 . BY: _____ DATE: _____ .										
140	OV1	546	Thermocouple Stress Cycle	FN	1.00	15		.00		12.00	1/23/97	1/24/97	
			. STRESS RELIEVE THE LOWER SHELL IN THE NEUTRAL POSITION (standing up) WITH BAFFLES TO PROTECT FROM ANY DIRECT FLAME BURNERS. NO LOCALLIZED HOT SPOTS. . HEAT THE VESSEL AT A RATE OF 100 DER. F. PER HOUR ABOVE 350 DEG. F. UP TO 1000 DEG. F. +/-50 DEG. HOLD FOR 4 HOURS. COOL AT A RATE OF 100 DEG. F. PER HOUR TO 300 DEG. F. BEFORE REMOVING FROM THE FURNACE. . NOTE: THERMOCOUPLES REQUIRED FOR THE ENTIRE CYCLE PER STEP 4.2 . BY: J.R. DATE: 12/17/96 .										
143	AF1	400	Welding Assembly-Fitting	AS	1.00	15		.00		2.00	1/24/97	1/24/97	
			. INSTALL THE LOWER CYLINDER REROUNDING FIXTURE. NOTE THE TIMING OF THE FIXTURE TO THE PORT LOCATIONS. . ADJUST THE FIXTURE AND TIGHTEN AS REQUIRED FOR MACHINING. . . BY JAB DATE 12-30-96 . ********** SEND TO THE MACHINE SHOP ********** .										
145	HC8	615	Machine per print	HB	1.00	15		.00		40.00	1/24/97	1/28/97	

PROG: JC4100 PRODUCTION ROUTING SHEET PAGE: 1C
USER: DRB --- SHOP COPY --- DATE: 11/11
TIME: 9.3!

COMPANY: 1 RANOR, INC.

JOB/LOT NUMBER	JOB DESC.	PART NUMBER	PART DESCRIPTION	REV	- CODES - #	JOB USER	CUSTOMER P.O. N
7300FM	LIGO VACUMM CHAMBER	V049-4-101	PSI BEAM SPLITTER CHAMBERS				555822

LEVEL OF ASSY:	REV	PART NUMBER	PART DESCRIPTION	PROD QTY	START DATE	DUE DATE	PARENT LEVEI
1		V049-4-101 LEV 1	P.S.I. LOWER CHAMBER	15	1/07/97	2/14/97	

OPERATIONS:

SEQ	W/C	OPR	DESCRIPTION	DPT	PCS/ASY	OP. QTY	OVERLAP	S/U STD	PROD STD	PROD HRS	START	DUE	IN

LAYOUT, & MACHINE ALL NON CRITICAL PORTS, PARTS 9,10 & 11
(REF. PORTS E,F & G).
NOTE: DO NOT MACHINE PART# 13 (D-PORT) LOCATIONS.

NOTIFY QC FOR A DIMENSIONAL INSPECTION OF THE PREMACHINING.
VERIFY CENTERLENES, AND THE EXTRA STOCK TO MACHINE THE
TOP OF THE CYLINDER FOR THE LARGE FLANGE.

LAYOUT & SCRIBE WITH CARBIDE 4 LOCATIONS 3/8" LONG AT
EACH OF THE PORTS AT 0, 90, 180, & 270 DEG.

BY: R.P. DATE: 1-8-97

150	QC3	585	Dimensional Inspection	QC	1.00	15		.00		2.00	1/28/97	1/29/97	

INSPECT MACHINED PORT FEATURES AND THE SCRIBE LOCATIONS.

INSPECTED BY: (RANOR Q.C.) R.B. DATE: 1-8-97 (+ 3/4)

REFER TO P.S.I. QUALITY PLAN SEQ. Q

********** SEND TO THE FAB SHOP **********

155	FN1	500	STEAM CLEANING	FN	1.00	15		.00		3.00	1/29/97	1/29/97	

STEAM CLEAN USING "OAKITE 1300 THEN FOLLOWED BY STEAM ONLY.

BY: JAB DATE: 1/29/97

160	AF1	400	Welding Assembly-Fitting	AS	1.00	15		.00		10.00	1/29/97	1/29/97	

FITUP AND TACK PART# 9,10 & 11 (REF. E,F & G PORTS) TO THE
LOWER SHELL SUBASSEMBLY.
SEE DWG# V049-4-003, SHEET:1, DETAIL:2

BY: W. DATE: 1-9-97

FORMAN TO CHECK FITUP BY JAB DATE 1-9-97

165	WE1	466	WELDING SEQUENCE.	WE	1.00	15		.00		20.00	1/29/97	1/31/97	

PROG: JC4100 PRODUCTION ROUTING SHEET PAGE: 1
USER: DRB --- SHOP COPY --- DATE: 11/1
TIME: 9.3

COMPANY: 1 RANOR, INC.

JOB/LOT NUMBER	JOB DESC.	PART NUMBER	PART DESCRIPTION	REV	- CODES - # JOB USER	CUSTOMER P.O.
7300FM	LIGO VACUMM CHAMBER	V049-4-101	PSI BEAM SPLITTER CHAMBERS			555822

LEVEL OF ASSY:	REV	PART NUMBER	PART DESCRIPTION	PROD QTY	START DATE	DUE DATE	PARENT LEVEL
1		V049-4-101 LEV 1	P.S.I. LOWER CHAMBER	15	1/07/97	2/14/97	

OPERATIONS:

SEQ	W/C	OPR	DESCRIPTION	DPT	PCS/ASY	OP. QTY	OVERLAP	S/U STD	PROD STD	PROD HRS	START	DUE	IN
			WELD ALL NON CRITICAL PORTS, PART# 9,10 & 11 (REF.E,F & G PORTS) PER THE DRAWING AND WELD MAPS.										
			COMPLETE THE WELD MAPS. READ ALL NOTES ON THE WELD MAPS.										
			BY: W DATE: 1/10/97										
170	QC2	573	Visual Inspection	QC	1.00	15		.00		6.00	1/31/97	1/31/97	
			INSPECT WELDING OF PART# 9,10 & 11 (E,F & G PORTS). 100% VISUAL INSPECTION OF THE WELDS IS REQUIRED. COMPLETE THE VISUAL INSPECTION REPORTS.										
			INSPECTED BY: (RANOR Q.C.) [signature] DATE: 1-17-97										
			REFERENCE P.S.I. QUALITY PLAN SEQUENCE R										
175	FN1	500	STEAM CLEANING	FN	1.00	15		.00		4.00	1/31/97	1/31/97	
			STEAM CLEAN USING OAKITE 1300 THEN STEAM ONLY										
			BY: [signature] DATE: 1-15-97										
			********** SEND TO THE MACHINE SHOP **********										
180	HC8	615	Machine per print	HB	1.00	15		.00		20.00	1/31/97	2/03/97	
			SET-UP PART TO MACHINE THE ENDS OF THE 60" NOZZLES SQUARE.										
			LAYOUT AND MACHINE THE EXTRA STOCK ON THE TOP OF THE CYLINDER SHELL SUBASSEMBLY FOR THE LARGE FLANGE FITUP.										
			MACHINE THE FOUR CRITICAL "D" PORT LOCATIONS (PT# 13).										
			BY: [signature] DATE: 1/25/97										
			********** SEND TO THE FAB SHOP **********										
185	QC3	585	Dimensional Inspection	QC	1.00	15		.00		60.00	2/03/97	2/07/97	
			INSPECT THE 60" NOZZLE MACHINING, & TOP WELD PREP.										

PROG: JC4100 PRODUCTION

USER: DRB

ROUTING SHEET

--- SHOP COPY ---

COMPANY: 1 RANOR, INC.

JOB/LOT NUMBER	JOB DESC.	PART NUMBER	PART DESCRIPTION	REV	- CODES - # JOB USER	CUSTOMER P.O. N
7300FM	LIGO VACUMM CHAMBER	V049-4-101	PSI BEAM SPLITTER CHAMBERS			555822

LEVEL OF ASSY: 1	REV	PART NUMBER	PART DESCRIPTION	PROD QTY	START DATE	DUE DATE	PARENT LEVEI
		V049-4-101 LEV 1	P.S.I. LOWER CHAMBER	15	1/07/97	2/14/97	

OPERATIONS:

SEQ	W/C	OPR	DESCRIPTION	DPT	PCS/ASY	OP. QTY	OVERLAP	S/U STD	PROD STD	PROD HRS	START	DUE	IN

INSPECTED BY: (RANOR Q.C.) [signature] DATE: 1-28-97

INSPECTED BY: (P.S.I.) [signature] DATE 2-7-97

REFERENCE P.S.I. QUALITY PLAN SEQ. T

INSPECT THE LOCATION OF 4 "D" PORTS.

INSPECTED BY: (RANOR Q.C.) _____ DATE: _____

INSPECTED BY: (P.S.I.) [signature] DATE 2-4-97

190	FN1	500	REF. P.S.I. QUALITY PLAN SEQUENCE NO. U STEAM CLEANING	FN	1.00	15		.00		4.00	2/07/97	2/07/97	

STEAM CLEAN USING OAKITE 1300 , THEN STEAM ONLY.

BY: [signature] DATE: 1-28-97

195	AF1	400	Welding Assembly-Fitting	AS	1.00	15		.00		6.00	2/07/97	2/07/97	

FIT-UP , & FIXTURE THE LOWER SHELL FOR FLANGE ATTACHMENT.

NOTE: BOTH UPPER, & LOWER FLANGES WILL BE USED FOR FOR ALIGNMENT, AND RIDIGITY.

BY: [signature] DATE: 1-30-97

200	QC2	585	Dimensional Inspection	QC	1.00	15		.00		2.00	2/07/97	2/07/97	

INSPECT THE FIT-UP OF THE UPPER, & LOWER FLANGES TO SHELL.

INSPECTED BY: (RANOR Q.C.) [signature] DATE: 2-4-97

INSPECTED BY: (P.S.I.) [signature] DATE 2-4-97

REF. P.S.I. QUALITY PLAN SEQ. W.

205	WE1	466	WELDING SEQUENCE.	WE	1.00	15		.00		10.00	2/10/97	2/10/97	

PROG: JC4100 PRODUCTION

USER: DRB

ROUTING SHEET

--- SHOP COPY ---

PAGE: 1
DATE: 11/1
TIME: 9.3

COMPANY: 1 RANOR, INC.

JOB/LOT NUMBER	JOB DESC.	PART NUMBER	PART DESCRIPTION	REV	- CODES - #	JOB	USER	CUSTOMER P.O.
7300FM	LIGO VACUMM CHAMBER	V049-4-101	PSI BEAM SPLITTER CHAMBERS					555822

LEVEL OF ASSY:	REV	PART NUMBER	PART DESCRIPTION	PROD QTY	START DATE	DUE DATE	PARENT LEVEL
1		V049-4-101 LEV 1	P.S.I. LOWER CHAMBER	15	1/07/97	2/14/97	

OPERATIONS:

SEQ	W/C	OPR	DESCRIPTION	DPT	PCS/ASY	OP. QTY	OVERLAP	S/U STD	PROD STD	PROD HRS	START	DUE	IN
			WELD THE UPPER , AND LOWER FLANGES TO THE SHELLS PER DWG. AND WELD MAPS. REF. WELD MAP SHEET #9 . READ ALL NOTES ON THE WELD MAPS. COMPLETE THE WELD MAPS. . BY LL/P DATE_____										
210	QC2	573	Visual Inspection	QC	1.00	15		.00		1.00	2/10/97	2/10/97	
			. INSPECT LOWER SHELL TO FLANGE WELDS 100% VISUAL INSPECTION OF THE FLANGE WELDS IS REQUIRED. . COMPLETE THE VISUAL INSPECTION REPORT. . INSPECTED BY: (RANOR Q.C.) _____ DATE: 2-4-97 . INSPECTED BY: (P.S.I.) _____ DATE 2-4-97 . REFERENCE P.S.I. QUALITY PLAN SEQ. X										
215	AF1	400	Welding Assembly-Fitting	AS	1.00	15		.00		8.00	2/10/97	2/11/97	
			. FIT-UP THE 60" WELD FLANGES PER DRAWING SHEET 1 USE A STRONGBACK FIXTURE BOLTED TO THE FLANGE FOR REINFORCEMENT WITH 1/8" ALUMINUM SHIMS BOLTED IN BETWEEN. (this will prevent arcing of the finish surfaces) . BY: R.P.L. DATE: 1-28-97										
220	WE1	466	WELDING SEQUENCE.	WE	1.00	15		.00		16.00	2/11/97	2/11/97	
			. WELD THE 60" FLANGES TO NOZZLES, PER DRAWING SHEET 1. READ ALL NOTES ON THE WELD MAP. COMPLETE THE WELD MAPS. . BY_____ DATE_____										
225	QC2	573	Visual Inspection	QC	1.00	15		.00		4.00	2/12/97	2/12/97	
			. INSPECT THE 60" FLANGE TO SHELL WELDS 100% VISUAL INSPECTION OF THE 60" FLANGE WELDS IS REQUIRED.										

PROG: JC4100 PRODUCTION

USER: DRB

ROUTING SHEET

--- SHOP COPY ---

PAGE: 14
DATE: 11/11
TIME: 9.35

COMPANY: 1 RANOR, INC.

JOB/LOT NUMBER	JOB DESC.	PART NUMBER	PART DESCRIPTION	REV	- CODES - #	JOB USER	CUSTOMER P.O.
7300FM	LIGO VACUMM CHAMBER	V049-4-101	PSI BEAM SPLITTER CHAMBERS				555822

LEVEL OF ASSY:	REV	PART NUMBER	PART DESCRIPTION	PROD QTY	START DATE	DUE DATE	PARENT LEVEL
1		V049-4-101 LEV 1	P.S.I. LOWER CHAMBER	15	1/07/97	2/14/97	

OPERATIONS:

SEQ	W/C	OPR	DESCRIPTION	DPT	PCS/ASY	OP. QTY	OVERLAP	S/U STD	PROD STD	PROD HRS	START	DUE	IN

COMPLETE THE VISUAL INSPECTION REPORT.

INSPECTED BY: (RANOR Q.C.) [signature] DATE: 2-4-97

INSPECTED BY: (P.S.I.) [signature] DATE 2-4-97

REF. P.S.I. QUALITY PLAN SEQ. Y

230 AF1 400 Welding Assembly-Fitting — AS 1.00 15 .00 12.00 2/12/97 2/12/97

FITUP PART# 13 (D-PORTS) USING THE ASSEMBLY FIXTURE PER DWG# V049-4-003 DEATIL: 2.

QC IS TO VERIFY THE LOCATIONS.
NOTIFY QC TO INSPECT THE LOCATIONS.

QC INSPECTION BY_____ DATE_____

BY SE DATE 1/31/97

235 WE1 466 WELDING SEQUENCE. — WE 1.00 15 .00 15.00 2/12/97 2/13/97

WELD PART# 13 (D-PORTS) COMPLETE PER THE DRAWING AND THE WELD MAPS.
READ ALL NOTES ON THE WELD MAPS.
COMPLETE THE WELD MAPS.

BY [signature] DATE 1-31-97

240 QC3 585 VISUAL INSPECTION. — QC 1.00 15 .00 4.00 2/13/97 2/14/97

100% VISUAL INSPECTION OF PT# 13 (D-PORT) WELD IS REQUIRED.

COMPLETE THE VISUAL INSPECTION REPORT.

INSPECTED BY: (RANOR Q.C.) [signature] DATE: 2-4-97

INSPECTED BY: (P.S.I.) [signature] DATE 2-4-97

REF. P.S.I. QUALITY PLAN SEQ. BB.

PROG: JC4100 PRODUCTION

USER: DRB

ROUTING SHEET

--- SHOP COPY ---

PAGE: 1
DATE: 11/1
TIME: 9.3

COMPANY: 1 RANOR, INC.

JOB/LOT NUMBER	JOB DESC.	PART NUMBER	PART DESCRIPTION	- CODES - REV # JOB USER	CUSTOMER P.O.
7300FM	LIGO VACUMM CHAMBER	V049-4-101	PSI BEAM SPLITTER CHAMBERS		555822

LEVEL OF ASSY:	REV	PART NUMBER	PART DESCRIPTION	PROD QTY	START DATE	DUE DATE	PARENT LEVEL
1		V049-4-101 LEV 1	P.S.I. LOWER CHAMBER	15	1/07/97	2/14/97	

OPERATIONS:

SEQ	W/C	OPR	DESCRIPTION	DPT	PCS/ASY	OP. QTY	OVERLAP	S/U STD	PROD STD	PROD HRS	START	DUE	IN
260	FN1	500	STEAM CLEANING	FN	1.00	15		.00		6.00	2/14/97	2/14/97	

STEAM CLEAN USING oakite 1300 FOLLOWED BY CLEAN STEAM.

BY: JB DATE: 2-7-97

SEQ	W/C	OPR	DESCRIPTION	DPT	PCS/ASY	OP. QTY	OVERLAP	S/U STD	PROD STD	PROD HRS	START	DUE	IN
265	QC3	585	Dimensional Inspection	QC	1.00	15		.00		10.00	2/14/97	2/14/97	

FINAL INSPECTION TO BE PERFORMED ON A NC MACHINE.

INSPECT FINAL WELDED ASSEMBLY, CHECK WELDS, CRITICAL PORT DIMENSIONS, & FLATNESS.

INSPECTED BY: (RANOR Q.C.) [signature] DATE: 2-4-97

INSPECTED BY: (P.S.I.) [signature] DATE 2-4-97

REF. P.S.I. QUALITY PLAN SEQ. BB.

NEXT LEVEL OF ASSEMBLY: PARENT LEVEL

OK To Ship GS 2-12-97

PROG: JC41[illegible]
USER: DRB

ROUTING SHEET
--- SHOP COPY ---

Level 1A
Units 1 - 5

PAGE: 2
DATE: 10/01
TIME: 14.47

COMPANY: 1 RANOR, INC.

JOB/LOT NUMBER	JOB DESC.	PART NUMBER	PART DESCRIPTION	- CODES - REV # JOB USER	CUSTOMER P.O. N
7300FM	LIGO VACUMM CHAMBER	V049-4-101	PSI BEAM SPLITTER CHAMBERS		555822

LEVEL OF ASSY: 1A REV	PART NUMBER	PART DESCRIPTION	PROD QTY	START DATE	DUE DATE	PARENT LEVEL
	V049-4-101 LEV 1A	P.S.I. BOTTOM SHELL	15	9/09/96	2/14/97	

OPERATIONS:

SEQ	W/C	OPR	DESCRIPTION	DPT	PCS/ASY	OP. QTY	OVERLAP	S/U STD	PROD STD	PROD HRS	START	DUE	IN
			THIS LEVEL 1A, IS FOR THE LOWER VESSEL SHELL.										
			REFERENCE DRAWING V049-4-101, AND V049-4-003										
			MATERIAL 304 L STAINLESS STEEL, FURNISHED BY THE CUSTOMER.										
			ALL WELDING ON ROOT PASSES USING GTAW WITH BACKPURGE, AND COMPLETED USING THE PLASMA ARC PROCESS.										
			SPECIAL PRECAUTIONS MUST BE TAKEN NOT TO HAVE CARBON STEEL IN CONTACT WITH THE MATERIAL ON THIS JOB, AS WELL AS NO OILS, & OR HYDROCARBON CONTAMINATION OF ANY TYPE.										
			WELDING BY QUALIFIED PERSONELL ONLY USING GTAW, & PAW IN ACCORDANCE WITH PROCEDURES: P-P8-P8-2, REV. 0., AND T-P8-P8-PSI, REV.0.										
			NO AIR TOOLS CAN BE USED FOR PROCESSING THIS MATERIAL, USE ONLY ELECTRIC TOOLS,GRINDING IS PERMISSIBLE ONLY IF FOLLOWED BY CARBIDE BURRS. PLASMA CUT EDGES ALSO REQUIRE CARBIDE BURRING.										
			ALL HEAT NO'S MUST BE RECORDED, & MAINTAINED. PARTS ARE TO BE VIBRO-ETCHED ON THE O.D. ONLY.										
			NO MARKING ON THE PART I.D. AT ALL, AND NO MARKERS ON THE MATERIAL. MARKING ON THE O.D. ON YELLOW 3M BRAND NUCLEAR TAPE # 483, PURCHASED FOR THIS JOB, MARKINGS ALLOWED ON THIS TAPE ONLY.										
10	FC1	070	Plasma Cut	FC	1.00	15		.00		150.00	9/09/96	9/18/96	
			PLASMA CUT ITEMS PER B.O.M., NOTE STITCH BURNING ON ITEM 3, ON THE INSIDE 59 1/2" PORT HOLES.										
			RECORD ALL HEAT NO. ON THE O.D. ON THE ABOVE SPECIFIED NUCLEAR TAPE.										
			BY: RPG DATE: 09/26/96										
			DRB 1-10-96										
15	BV1	200	Bevel to Spec.	BV	1.00	15		.00		180.00	9/18/96	10/02/96	

COMPANY: 1 RANOR, INC.

JOB/LOT NUMBER	JOB DESC.	PART NUMBER	PART DESCRIPTION	REV	- CODES - #	JOB USER	CUSTOMER P.O. N
7300FM	LIGO VACUMM CHAMBER	V049-4-101	PSI BEAM SPLITTER CHAMBERS				555822

LEVEL OF ASSY: 1A	REV	PART NUMBER	PART DESCRIPTION	PROD QTY	START DATE	DUE DATE	PARENT LEVEL
		V049-4-101 LEV 1A	P.S.I. BOTTOM SHELL	15	9/09/96	2/14/97	

OPERATIONS:

SEQ	W/C	OPR	DESCRIPTION	DPT	PCS/ASY	OP. QTY	OVERLAP	S/U	STD	PROD STD	PROD HRS	START	DUE	IN

PROTECT THE INSIDE SURFACE FROM DIRT, & OILS.

USE ALUMINUM SHOES WITH BEVELER TO AVOID CARBON STEEL CONTACT WITH THE INSIDE OF THE SHELL.

PREP THE EDGES OF ITEMS 3, FOR LONGITUDINAL SEAM WELD.

PER DRAWING DETAILS 8, WELD MAP.

SIGN OFF FOR EACH OF THE SERIAL NUMBERS PREPED.

S/N 4 ~~DPKM~~ MC 10-1-96 S/N 5 ~~DPKM~~ S/N 1 JG S/N 2 JG S/N 3 JG

BEVELING COMPLETED FOR THIS LOT OF PARTS.

BY: J G DATE: 9/27/96

17 QC3 585 Dimensional Inspection QC 1.00 15 .00 1.00 10/02/96 10/02/96

INSPECT WELD BEVEL PER SKETCH #6, DETAIL X.

SIGN OFF FOR EACH OF THE CYLINDERS INSPECTED.

S/N 4 JPM S/N 5 JPM S/N 1 JPM S/N 2 JPM S/N 3 JPM

OPERATION COMPLETED FOR THIS LOT OF PARTS.

BY: JPM DATE: 9-28-96

20 PB1 260 Bump - Start PB 1.00 15 .00 90.00 10/02/96 10/09/96

VERIFY THE DIRECTION OF ROLLING WITH REFERENCE TO THE WELD PREPS, PRIOR TO FORMING.

USE ALUMINUM AND OR CARPET PURCHASED FOR THIS PROJECT TO AVOID ANY CARBON STEEL CONTACT WITH THE INSIDE OF THE VESSEL

BUMP START ENDS OF ITEMS 3, PER SKETCH 6.

SIGN OFF FOR EACH OF THE SERIAL NUMBERS BUMPED.

COMPANY: 1 RANOR, INC.

JOB/LOT NUMBER	JOB DESC.	PART NUMBER	PART DESCRIPTION	- CODES - REV #	JOB USER	CUSTOMER P.O. N
7300FM	LIGO VACUMM CHAMBER	V049-4-101	PSI BEAM SPLITTER CHAMBERS			555822

LEVEL OF ASSY: 1A	REV	PART NUMBER	PART DESCRIPTION	PROD QTY	START DATE	DUE DATE	PARENT LEVEI
		V049-4-101 LEV 1A	P.S.I. BOTTOM SHELL	15	9/09/96	2/14/97	

OPERATIONS:

SEQ	W/C	OPR	DESCRIPTION	DPT	PCS/ASY	OP. QTY	OVERLAP	S/U	STD	PROD STD	PROD HRS	START	DUE	IN

S/N 4 S/N 5 S/N 1 S/N 2 S/N 3

OPERATION COMPLETED FOR THIS LOT OF PARTS.

BY: _____ DATE: 10/3/96

25	RO1	300	Roll Forming	RO	1.00		15		.00		375.00	10/10/96	11/12/96	

VERIFY THE INSIDE SURFACE PRIOR TO ROLLING, & THAT BEVELS ARE CORRECT WITH REFERENCE TO THE I.D..

ROLL ITEMS 3, PER DRAWING DETAIL 8, AND SKETCH 6.

SIGN OFF EACH SERIAL NUMBER ROLLED.

S/N 4 D.P. S/N 5 D.P. S/N 1 D.P. S/N 2 D.P. S/N 3 D P

OPERATION COMPLETED FOR THIS LOT OF PARTS.

BY: D.P. DATE: 10-3-96

30	QC2	585	Dimensional Inspection	QC	1.00		15		.00		150.00	11/12/96	11/26/96	

INSPECT ALL ITEMS PRIOR TO WELDING, & FIT-UP PER DRAWINGS AND SKETCHES.

SIGN OFF FOR EACH OF THE CYLINDERS INSPECTED.

S/N 4 JPM S/N 5 JPM S/N 1 JPM S/N 2 JPM S/N 3 JPM

OPERATION COMPLETED FOR THIS LOT OF PARTS.

BY: JPM DATE: 10-3-96

35	AF1	400	Welding Assembly-Fitting	AS	1.00		15		.00		150.00	11/26/96	12/10/96	

FIT-UP FOR WELDING THE LONGITUDINAL SEAM OF ITEM 3, REFERENCE DRAWING DETAIL, SKETCHES, AND WELD MAP.

PROG: JC4100 PRODUCTION

USER: DRB

ROUTING SHEET

--- SHOP COPY ---

PAGE: 5
DATE: 10/01
TIME: 14.47

COMPANY: 1 RANOR, INC.

JOB/LOT NUMBER	JOB DESC.	PART NUMBER	PART DESCRIPTION	REV	- CODES - #	JOB USER	CUSTOMER P.O. N
7300FM	LIGO VACUMM CHAMBER	V049-4-101	PSI BEAM SPLITTER CHAMBERS				555822

LEVEL OF ASSY: 1A	REV	PART NUMBER	PART DESCRIPTION	PROD QTY	START DATE	DUE DATE	PARENT LEVEI
		V049-4-101 LEV 1A	P.S.I. BOTTOM SHELL	15	9/09/96	2/14/97	

OPERATIONS:

SEQ	W/C	OPR	DESCRIPTION	DPT	PCS/ASY	OP. QTY	OVERLAP	S/U STD	PROD STD	PROD HRS	START	DUE	IN

SIGN OFF FOR EACH OF THE CYLINDERS FIT-UP.

S/N 4 DW S/N 5 DW S/N 1 DW S/N 2 DW S/N 3 DW

OPERATION COMPLETED FOR THIS LOT OF PARTS.

BY: DW DATE: 10/3/96

40 QC2 560 Fit Up Inspection QC 1.00 15 .00 45.00 12/10/96 12/12/96

INSPECT THE FIT-UP FOR WELD OF THE ABOVE ITEM.

SIGN-OFF FOR EACH OF THE CYLINDERS CHECKED.

S/N RANOR S/N RANOR S/N RANOR S/N RANOR S/N RANOR

OPERATION COMPLETED FOR THIS LOT OF PARTS.

INSPECTED BY: WORKMANSHIP [signature] DATE: 10-3-96

REF. P.S.I. QUALITY PLAN SEQ. G. , NO CUSTOMER WITNESS REQ. FOR FIT-UP.

45 WE1 466 GTAW-SS WE 1.00 15 .00 450.00 12/12/96 1/24/97

WELD LONGITUDINAL SEAM
REFERENCE THE WELD PROCEDURES, WELD MAPS, & DRAWING DETAILS.

SIGN OFF WELD MAP PER SERIAL NUMBER (S/N) WELDED.
AS WELL AS BELOW FOR TRACKING OF COMPLETED SERIAL NUMBERS.

S/N 1 W S/N 2 RR S/N 3 S/N 4 S/N 5 RR

Don Rooney:
Did not sign weld maps.

OPERATION COMPLETED FOR THIS LOT OF PARTS.

BY: DATE:

50 QC3 573 Visual Inspection QC 1.00 15 .00 60.00 1/24/97 1/29/97

INSPECT WELDS ON LOGNITUDAL SEAM OF THE LOWER SHELL

PROG: JC4100 R O U T I N G S H E E T PAGE: 6
USER: DRB --- SHOP COPY --- DATE: 10/0
TIME: 14.4

COMPANY: 1 RANOR, INC.

JOB/LOT NUMBER	JOB DESC.	PART NUMBER	PART DESCRIPTION	REV #	- CODES - JOB USER	CUSTOMER P.O. N
7300FM	LIGO VACUMM CHAMBER	V049-4-101	PSI BEAM SPLITTER CHAMBERS			555822

LEVEL OF ASSY: 1A	REV	PART NUMBER	PART DESCRIPTION	PROD QTY	START DATE	DUE DATE	PARENT LEVEI
		V049-4-101 LEV 1A	P.S.I. BOTTOM SHELL	15	9/09/96	2/14/97	

OPERATIONS:

SEQ	W/C	OPR	DESCRIPTION	DPT	PCS/ASY	OP. QTY	OVERLAP	S/U	STD	START	DUE	IN
			SIGN OFF ON THIS OPERATION SEQUENCE, & WELD MAP.									
			S/N_____ S/N_____ S/N_____ S/N_____ S/N_____									
			OPERATION COMPLETED FOR THIS LOT OF PARTS.									
			INSPECTED BY: (RANOR Q.C.)_____ DATE:_____									
			FILL OUT APPROPRIATE NDE, VISUAL INSPECTION REPORT, PER S/N EXAMINED.									
			INSPECTED BY: (P.S.I.) Gene Leveral DATE 10-3-96 S/N 1,395									
			REF. P.S.I. QUALITY PLAN SEQ.G.									
55	FN1	502	Grind 3 to 1 Taper	FN	1.00	15			.00	5.00	1/29/97	1/29/97
			GRIND THE 3 TO 1 TAPER ON THE LOWER HEAD (1/2" MATERIAL) TO THE HEAD (3/8 " MATERIAL) PER DRAWING DETAIL 3, AND SECTION C-C ON SHEET 1. SIGN OFF FOR EACH OF THE SERIAL NUMBERS GROUND.									
			S/N_____ S/N_____ S/N_____ S/N_____ S/N_____									
			OPERATION COMPLETED FOR THIS LOT OF PARTS.									
			BY: _____ DATE:_____									
60	PB1	265	Reround Within 1/8"	PB	1.00	15			.00	90.00	1/30/97	2/06/97
			RE-ROUND CYLINDER PER SKETCH # 6.									
			SIGN OFF FOR EACH OF THE SERIAL NUMBERS RE-ROUNDED.									
			S/N 310-1-96 S/N DP 10-11-96 S/N DP 12-13-96 S/N DP S/N DP 1-4-97									
			OPERATION COMPLETED FOR THIS LOT OF PARTS.									
			BY: _____ DATE:_____									
65	QC3	585	Dimensional Inspection	QC	1.00	15			.00	60.00	2/06/97	2/11/97

QC seq 50
welding - V

N/A JPB

N/A JPB

PROG: JC4100

USER: DRB

ROUTING SHEET

--- SHOP COPY ---

PAGE: 7
DATE: 10/01
TIME: 14.47

COMPANY: 1 RANOR, INC.

JOB/LOT NUMBER	JOB DESC.	PART NUMBER	PART DESCRIPTION	- CODES - REV #	JOB USER	CUSTOMER P.O. N
7300FM	LIGO VACUMM CHAMBER	V049-4-101	PSI BEAM SPLITTER CHAMBERS			555822

LEVEL OF ASSY: 1A	REV	PART NUMBER	PART DESCRIPTION	PROD QTY	START DATE	DUE DATE	PARENT LEVEI
		V049-4-101 LEV 1A	P.S.I. BOTTOM SHELL	15	9/09/96	2/14/97	

OPERATIONS:

SEQ	W/C	OPR	DESCRIPTION	DPT	PCS/ASY	OP. QTY	OVERLAP	S/U	STD	PROD STD	PROD HRS	START	DUE	IN
			INSPECT FINSIHED SHELL, PER DRAWING, & SKETCH.											
			SIGN OFF FOR EACH OF THE SERIAL NUMBERS INSPECTED.											
			S/N_____ S/N_____ S/N_____ S/N_____ S/N_____											
			OPERATION COMPLETED FOR THIS LOT OF PARTS.											
			INSPECTED BY: (RANOR Q.C.)_____ DATE:_____											
70	AF1	400	Welding Assembly-Fitting	AS	1.00	15			.00		60.00	2/11/97	2/14/97	
			RE-ASSEMBLE CYLINDER & FIXTURES FOR ASSEMBLY.											
			SIGN OFF FOR EACH OF THE SERIAL NUMBERS ASSEMBLED.											
			S/N_____ S/N_____ S/N_____ S/N_____ S/N_____											
			OPERATION COMPLETED FOR THIS LOT OF PARTS.											
			BY: _____ DATE:_____											
			SEE NEXT LEVEL OF ASSEMBLY LEVEL 1, LOWER SHELL ASSEMBLY.											

W/O JAB

PROG: JC41.

USER: DHOOD

PRODUCTION

ROU NG SHEET

--- SHOP COPY ---

Level 1C

Units 1 - 5

PAGE: 2

DATE: 9/2(

TIME: 8.4(

COMPANY: 1 RANOR, INC.

JOB/LOT NUMBER	JOB DESC.	PART NUMBER	PART DESCRIPTION	REV	- CODES - #	JOB USER	CUSTOMER P.O. N
7300FM	LIGO VACUMM CHAMBER	V049-4-101	PSI BEAM SPLITTER CHAMBERS				555822

LEVEL OF ASSY:	REV	PART NUMBER	PART DESCRIPTION	PROD QTY	START DATE	DUE DATE	PARENT LEVEI
1C		V049-4-101 LEV 1C	P.S.I. LOWER SHELL MISC. PARTS	15	1/11/96	2/13/97	

OPERATIONS:

SEQ	W/C	OPR	DESCRIPTION	DPT	PCS/ASY	OP. QTY	OVERLAP	S/U STD	PROD STD	PROD HRS	START	DUE	IN

THIS LEVEL 1C, IS FOR THE FABRICATION OF THE LOWER SHELL MISCELANIOUS PARTS, FLANGES, & STIFFNERS.

SPECIAL PRECAUTIONS MUST BE TAKEN TO AVOID CARBON STEEL CONTACT WITH THE INSIDE OF THIS VESSEL. ALSO NO OILS, AND OR HYDROCARBON CONTAMINATION OF ANY TYPE IS ALLOWED.

WELDING BY QUALIFIED PERSONELL ONLY USING GTAW, AND PAW IN ACCORDANCE WITH PROCEDURES : T-P8-P8-PSI, REV.0, AND P-P8-P8-2, REV. 0.

NO AIR TOOLS CAN BE USED FOR PROCESSING THIS MATERIAL, USE ONLY ELECTRIC TOOLS. GRINDING IS ALLOWED PROVIDED THE GROUND EDGE IS CLEANED WITH A CARBIDE BURR. ALL PLASMA CUT EDGES ALSO REQUIRE CARBIDE BURRING.

ALL HEAT NO'S MUST BE RECORDED, & MAINTAINED .
PARTS ARE TO BE VIBRO-ETCHED ON THE O.D. ONLY.
NO MARKINGS AT ALL ON THE I.D. AND NO MAGIC MARKERS ON THE O.D.

MATERIAL: 304 L SUPPLIED BY THE CUSTOMER.

10	FC1	070	Plasma Cut	FC	1.00	15		.00		150.00	1/11/96	1/25/96	

PLASMA CUT ITEMS: 16, 20, & 55 PER B.O.M. AND DNC'S.

CUT ITEM# 16 FROM THE 3/4"PL X 36 X 60 PLATE SUPPLIED.

ITEM# 20 AND 55 WILL BE CUT FROM THE 59 1/2"DIA. DROPS ON LEVEL# 1A, ITEM# 3.

MARK PARTS WITH A VIRO-ETCH TOOL ON THE O.D. ONLY.

BY: R.R. DATE: —

15	S01	150	Saw Cut	SW	1.00	15		.00		450.00	1/25/96	3/06/96	

SAW CUT THE FOLLOWING ITEMS PER THE B.O.M. AND SKETCHES.

N/A JAB

ITEM 15, MAKE FROM 3/8 x 4 BAR ROLLED WITH A 105 1/2"

PROG: JC41...

USER: DHOOD

PRODUCTION

ROUTING SHEET

--- SHOP COPY ---

PAGE: 3
DATE: 9/2(
TIME: 8.4(

COMPANY: 1 RANOR, INC.

JOB/LOT NUMBER	JOB DESC.	PART NUMBER	PART DESCRIPTION	- CODES - REV # JOB USER	CUSTOMER P.O. N
7300FM	LIGO VACUMM CHAMBER	V049-4-101	PSI BEAM SPLITTER CHAMBERS		555822

LEVEL OF ASSY:	REV	PART NUMBER	PART DESCRIPTION	PROD QTY	START DATE	DUE DATE	PARENT LEVEI
1C		V049-4-101 LEV 1C	P.S.I. LOWER SHELL MISC. PARTS	15	1/11/96	2/13/97	

OPERATIONS:

SEQ	W/C	OPR	DESCRIPTION	DPT	PCS/ASY	OP. QTY	OVERLAP	S/U STD	PROD STD	PROD HRS	START	DUE	IN
			I.D., LAYOUT & SAW THE SEGMENTS AS REQUIRED TO MAKE A 360 DEG. RING PER SKETCH# 1. (3 PC. CONSTRUCTION MAY BE REQUIRED.)										
			ITEM 21A, 21B,& 22 SAW TO LENGTH FOR PRE-MACHINING, PER B.O.M. .										
			ITEM 51, SAW TO LENGTH PER SKETCH# 6. MAKE FROM 1/2" x 2" ROLLED THE HARD WAY TO 52.00" OUTSIDE RADIUS.										
			BY: _____ DATE: _____										
20	SH1	100	Shear Per B.O.M.	SH	1.00		15	.00		90.00	3/06/96	3/13/96	
			SHEAR ITEM 52 (GUSSETS) PER THE B.O.M. SHEAR FROM 3/8 X 2 FLAT BAR.										
			BY: _____ DATE: _____										
25	BV1	200	Bevel to Spec.	BV	1.00		15	.00		300.00	3/13/96	4/10/96	
			BEVEL ITEM 15 PER SKETCH# 1. BY _____ DATE _____ BEVEL ITEM# 22 PER SKETCH# 5. BY [illegible] DATE 10/30/96 BEVEL ITEM# 21A PER SKETCH# 3. BY _____ DATE _____ BEVEL ITEM# 21B PER SKETCH# 4. BY _____ DATE _____ BEVEL ITEM# 52 PER SKETCH# 7. BY _____ DATE _____										
30	PB1	250	Forming per sketch	PB	1.00		15	.00		120.00	4/10/96	4/22/96	
			FORM ITEM# 20 COMPLETE PER SKETCH# 2.										
			BY: _____ DATE: _____										
35	FN1	500	STEAM CLEANING	FN	1.00		15	.00		120.00	4/22/96	5/01/96	
			STEAM CLEAN ALL PARTS INCLUDING THE PARTS THAT										

PROG: JC41 PRODUCTION

USER: DHOOD

ROUTING SHEET

--- SHOP COPY ---

PAGE: 4
DATE: 9/20
TIME: 8.49

COMPANY: 1 RANOR, INC.

JOB/LOT NUMBER	JOB DESC.	PART NUMBER	PART DESCRIPTION	- CODES - REV # JOB USER	CUSTOMER P.O. N
7300FM	LIGO VACUMM CHAMBER	V049-4-101	PSI BEAM SPLITTER CHAMBERS		555822

LEVEL OF ASSY: 1C REV	PART NUMBER	PART DESCRIPTION	PROD QTY	START DATE	DUE DATE	PARENT LEVEL
	V049-4-101 LEV 1C	P.S.I. LOWER SHELL MISC. PARTS	15	1/11/96	2/13/97	

OPERATIONS:

SEQ	W/C	OPR	DESCRIPTION	DPT	PCS/ASY	OP. QTY	OVERLAP	S/U STD	PROD STD	PROD HRS	START	DUE	IN
			REQUIRE SUBASSEMBLY. PROTECT PARTS WITH CLEAN PLASTIC, AND STORE IN THE P.S.I. AREA. BY: JB DATE: —										
			********** SEND TO THE MACHINE SHOP ********** SEND ALL MISC. PARTS THAT REQUIRE PREMACHINING.										
40	M1	615	Machine per print	MI	1.00	15		.00		300.00	5/01/96	5/30/96	
			USE ONLY CLEAN CINCINNATI MILICRON CIMTECK 410 FOR MACHINE COOLANT.										
			MACHINE PART# 20 COMPLETE PER SKETCH# 2 BY_____ DATE_____										
			MACHINE PART# 21A COMPLETE PER SKETCH# 3 BY_____ DATE_____										
			MACHINE PART# 21B COMPLETE PER SKETCH# 4. BY_____ DATE_____										
			MACHINE PART# 22 COMPLETE PER SKETCH# 5. BY_____ DATE_____										
45	VC1	645	Turning	VB	1.00	15		.00		1500.00	5/30/96	10/22/96	
			SEE MATERIAL HANDLING CAUTIONS SHEET 1, & MACHINE COOLANT REQUIREMENTS, OPERATION 40. Ranor PT# 1-20 [signature] 11/20/96										
			MACHINE PART# 5 COMPLETE PER DWG# V049-4-022. BY_____ DATE_____										
			MACHINE PART# 7 COMPLETE PER DWG# V049-4-019. BY_____ DATE_____										
			ALL FINISHED SURFACES MUST BE PROTECTED. NO OILS OR ANY CARBON STEEL CAN CONTACT THE MATERIAL ON THIS JOB. BY: _____ DATE: _____										
50	HC1	615	Machine per print	HB	1.00	15		.00		900.00	10/22/96	1/15/97	

PROG: JC41[illegible] PRODUCTION

USER: DHOOD

ROU[illegible]NG SHEET

--- SHOP COPY ---

PAGE: 5
DATE: 9/2[illegible]
TIME: 8.4[illegible]

COMPANY: 1 RANOR, INC.

JOB/LOT NUMBER	JOB DESC.	PART NUMBER	PART DESCRIPTION	REV	- CODES - #	JOB USER	CUSTOMER P.O.
7300FM	LIGO VACUMM CHAMBER	V049-4-101	PSI BEAM SPLITTER CHAMBERS				555822

LEVEL OF ASSY: 1C	REV	PART NUMBER	PART DESCRIPTION	PROD QTY	START DATE	DUE DATE	PARENT LEVEL
		V049-4-101 LEV 1C	P.S.I. LOWER SHELL MISC. PARTS	15	1/11/96	2/13/97	

OPERATIONS:

SEQ	W/C	OPR	DESCRIPTION	DPT	PCS/ASY	OP. QTY	OVERLAP	S/U STD	PROD STD	PROD HRS	START	DUE	IN

.

SEE MATERIAL HANDLING CAUTIONS OPERATION 45.

.

FINISH MACHINING THE FLANGES COMPLETE PER THE DRAWINGS AND THE MACHINE SHOP OPERATIONS SHEET AND INSTRUCTIONS.

.

BY: _____ DATE: _____

.

53 QC3 585 Dimensional Inspection QC 1.00 15 .00 2.00

.

QC TO DIMENSIONALY CHECK ALL PREMACHINED PARTS COMPLETE PER THE SKETCHES AND DRAWINGS.

.

INSPECTED: BY _____ DATE _____

.

********** SEND TO THE FAB SHOP **********

.

55 AF1 400 Welding Assembly-Fitting AS 1.00 15 .00 60.00 1/15/97 1/21/97

.

FIT-UP THE SUPPORT PAD SUB-ASSEMBLIES PER DWG. SHEET 4, DETAIL 15, ITEMS 20, & 55.

.

BY: A. DATE: 2,3,97

.

FORMAN TO CHECK FITUP BY 2/3/97 DATE JAB

.

60 WE1 466 GTAW-SS / PAW WE 1.00 15 .00 150.00 1/21/97 1/31/97

.

ALL WELDING BY QUALIFIED PERSONEL PER PROCEDURES. SEE GENERAL NOTES ON MATERIAL HANDLING, AND REQUIREMENTS ON THE FIRST PAGE OF THIS ROUTING .

.

WELD THE SUPPORT PAD SUB-ASSEMBLIES PER DRAWING, WELD PROCEDURES, & WELD MAPS.

.

COMPLETE THE WELD MAPS AND NOTIFY QC FOR THE VT INSPECTION OF THE WELDS.

.

BY: A DATE: 2,3,97

.

CHECK WELDS BY JAB DATE 2/3/97

.

PROG: JC41[illegible]

USER: DHOOD

ROUTING SHEET

--- SHOP COPY ---

PAGE: 6
DATE: 9/2[illegible]
TIME: 8.4[illegible]

COMPANY: 1 RANOR, INC.

JOB/LOT NUMBER	JOB DESC.	PART NUMBER	PART DESCRIPTION	REV	- CODES - #	JOB	USER	CUSTOMER P.O. N
7300FM	LIGO VACUMM CHAMBER	V049-4-101	PSI BEAM SPLITTER CHAMBERS					555822

LEVEL OF ASSY: 1C	REV	PART NUMBER	PART DESCRIPTION	PROD QTY	START DATE	DUE DATE	PARENT LEVEI
		V049-4-101 LEV 1C	P.S.I. LOWER SHELL MISC. PARTS	15	1/11/96	2/13/97	

OPERATIONS:

SEQ	W/C	OPR	DESCRIPTION	DPT	PCS/ASY	OP. QTY	OVERLAP	S/U	STD	PROD STD	PROD HRS	START	DUE	IN
62	QC3	573	Visual Inspection	QC	1.00	15		.00			2.00			

VISUAL INSPECTION OF THE WELDS IS REQUIRED.
COMPLETE THE VT INSPECTION REPORT.

INSPECTED: BY_____ DATE_____

SEQ	W/C	OPR	DESCRIPTION	DPT	PCS/ASY	OP. QTY	OVERLAP	S/U	STD	PROD STD	PROD HRS	START	DUE	IN
65	PB1	265	REROUND	PB	1.00	15		.00			60.00	1/31/97	2/06/97	

N/A. JAB

REROUND THE INSIDE RADIUS OF THE CHAMBER SUPPORT PAD SUB -ASSEMBLIES PER DRAWING. (52 3/4" I.R.)(ITEM 20 & 55).

BY: _____ DATE:_____

SEQ	W/C	OPR	DESCRIPTION	DPT	PCS/ASY	OP. QTY	OVERLAP	S/U	STD	PROD STD	PROD HRS	START	DUE	IN
70	FN1	500	STEAM CLEANING	FN	1.00	15		.00			90.00	2/06/97	2/13/97	

STEAM CLEAN ALL SUBASSEMBLIES AND MACHINED PARTS. PROTECT THE PARTS WITH PLASTIC AND STORE IN THE P.S.I. AREA.

BY: JB _____ DATE:_____

PROG: JC4100

USER: DRB

ROUTING SHEET

--- SHOP COPY ---

Level 1D

Units 1 - 5

DATE: 9/26

TIME: 11.36

COMPANY: 1 RANOR, INC.

JOB/LOT NUMBER	JOB DESC.	PART NUMBER	PART DESCRIPTION	REV	- CODES - # JOB USER	CUSTOMER P.O. N
7300FM	LIGO VACUMM CHAMBER	V049-4-101	PSI BEAM SPLITTER CHAMBERS			555822

LEVEL OF ASSY: 1D	REV	PART NUMBER	PART DESCRIPTION	PROD QTY	START DATE	DUE DATE	PARENT LEVEI
		V049-4-101 LEV 1D	P.S.I. LWR FLNG-ASSY PRE-MACH	15	10/25/96	2/14/97	

OPERATIONS:

SEQ	W/C	OPR	DESCRIPTION	DPT	PCS/ASY	OP. QTY	OVERLAP	S/U	STD	PROD STD	PROD HRS	START	DUE	IN
			. THIS LEVEL 1D, IS FOR THE MACHINING OF THE LOWER SHELL FLANGE ASSEMBLIES FOR A CONTOUR FIT TO THE LOWER 1/2" VESSEL. . REFERENCE ITEM NO'S: 9B, 13, 10, & 11. . SPECIAL PRECAUTIONS MUST BE TAKEN TO AVOID CARBON STEEL CONTACT WITH THE INSIDE OF THIS VESSEL. ALSO NO OILS, AND OR HYDROCARBON CONTAMINATION OF ANY TYPE IS ALLOWED. . WELDING BY QUALIFIED WELDERS ONLY, USING GTAW, AND PAW IN ACCORDANCE WITH PROCEDURES: P-P8-P8-2, REV.0, AND T-P8-P8-PSI, REV. 0. . NO AIR TOOLS CAN BE USED FOR PROCESSING THIS MATERIAL, USE ONLY ELECTRIC TOOLS . GRINDING IS ALLOWED PROVIDED THE GROUND EDGE IS CLEANED WITH A CARBIDE BURR. PLASMA CUT EDGES ALSO REQUIRE CARBIDE BURRING. . ALL HEAT NO'S MUST BE RECORDED, & MAINTAINED . PARTS ARE TO BE VIBRO-ETCHED ON THE O.D. ONLY. NO MARKINGS AT ALL ARE ALLOWED ON THE I.D., AND NO MAGIC MARKERS ON THE O.D. MARKING ON THE O.D. ON 3M YELLOW NUCLEAR TAPE # 483, PURCHASED FOR THIS JOB. MARKING ON THIS MATERIAL ONLY. . MATERIAL: 304 L SUPPLIED BY THE CUSTOMER.										
10	S01	150	Saw Cut	SW	1.00	15		.00		25.00	10/25/96	10/29/96	
			. USE CAUTION TO PROTECT THE FINISHED MACHINED SURFACES. . SAW CUT ITEMS BELOW PER B.O.M., & SKETCHES 1 THRU 4 FOR PRE-MACHINING. . BY: KA DATE: 12/19/96										
15	M1	615	Machine per print	MI	1.00	15		.00		125.00	10/29/96	11/08/96	
			. SEE SKETCHES 1 THRU 4. . USE ONLY CLEAN CINCINNATI MILICRON CIMTECK 410 FOR										

PROG: JC4100

USER: DRB

ROUTING SHEET

--- SHOP COPY ---

PAGE: 3
DATE: 9/26
TIME: 11.36

COMPANY: 1 RANOR, INC.

JOB/LOT NUMBER	JOB DESC.	PART NUMBER	PART DESCRIPTION	REV #	- CODES - JOB USER	CUSTOMER P.O. N
7300FM	LIGO VACUMM CHAMBER	V049-4-101	PSI BEAM SPLITTER CHAMBERS			555822

LEVEL OF ASSY: 1D	REV	PART NUMBER	PART DESCRIPTION	PROD QTY	START DATE	DUE DATE	PARENT LEVEL
		V049-4-101 LEV 1D	P.S.I. LWR FLNG-ASSY PRE-MACH	15	10/25/96	2/14/97	

OPERATIONS:

SEQ	W/C	OPR	DESCRIPTION	DPT	PCS/ASY	OP. QTY	OVERLAP	S/U STD	PROD STD	PROD HRS	START	DUE	IN
			MACHINE COOLANT.										
			APPROXIMATLY 1/4" HAS BEEN ALLOWED FOR MACHINING.										
			BY: _____ DATE: _____										
20	HC1	615	Machine per print	HB	1.00	15		.00		150.00	11/08/96	1/31/97	
			SEE MATERIAL HANDLING CAUTIONS OPERATION 15										
			MACHINE THE CONTOUR FIT PER DRAWING, & PROGRAM PROGRAM INSTRUCTIONS.										
			BY: J.L. DATE: 1/2/97										
25	PB1	265	Reround	PB	1.00	15		.00		100.00	1/31/97	2/07/97	
			N/P JOB'S REROUND THE MACHINED FLANGE ASSEMBLY TUBE END FOR ASSEMBLY, USE CAUTION TO PROTECT THE FINISHED MACHINED FLANGE SURFACES.										
			BY: _____ DATE: _____										
30	FN1	500	Steam Cleaning	FN	1.00	15		.00		20.00	2/07/97	2/14/97	
			STEAM CLEAN USING " OAKITE " 1300 FOLLOWED BY CLEAN STEAM.										
			BY: JB DATE: 1-3-97										

1st Pc. INSP. R.A. 11-22-96

1st pc PT# 11 JB 12-31-96

1st pc PT# 11 JB 1-3-97 new setup

1st pc PT# 1 JB 1-30-97

PROG: JC4100 PRODUCTION

USER: DRB

ROUTING SHEET

--- SHOP COPY ---

Level 1E

Units 1 - 5

PAGE: 2
DATE: 9/24
TIME: 15.12

COMPANY: 1 RANOR, INC.

JOB/LOT NUMBER	JOB DESC.	PART NUMBER	PART DESCRIPTION	- CODES - REV # JOB USER	CUSTOMER P.O. N
7300FM	LIGO VACUMM CHAMBER	V049-4-101	PSI BEAM SPLITTER CHAMBERS		555822

LEVEL OF ASSY: 1E REV	PART NUMBER	PART DESCRIPTION	PROD QTY	START DATE	DUE DATE	PARENT LEVEL
	V049-4-101 LEV 1E	P.S.I. 1/2", 60"PORTS	15	4/10/95	2/14/97	

OPERATIONS:

SEQ	W/C	OPR	DESCRIPTION	DPT	PCS/ASY	OP. QTY	OVERLAP	S/U STD	PROD STD	PROD HRS	START	DUE	IN

THIS LEVEL 1E, IS FOR THE LOWER VESSEL 60" PORTS.

REFERENCE DRAWING V049-4-101, AND V049-4-003

MATERIAL 304 L STAINLESS STEEL, FURNISHED BY THE CUSTOMER.

ALL WELDING ON ROOT PASSES USING GTAW WITH BACKPURGE, AND COMPLETED USING THE PLASMA ARC PROCESS.

SPECIAL PRECAUTIONS MUST BE TAKEN NOT TO HAVE CARBON STEEL IN CONTACT WITH THE MATERIAL ON THIS JOB, AS WELL AS NO OILS, & OR HYDROCARBON CONTAMINATION OF ANY TYPE.

WELDING BY QUALIFIED PERSONELL ONLY USING GTAW, & PAW IN ACCORDANCE WITH PROCEDURES: P-P8-P8-2, REV. 0., AND T-P8-P8-PSI, REV.0.

NO AIR TOOLS CAN BE USED FOR PROCESSING THIS MATERIAL, USE ONLY ELECTRIC TOOLS,GRINDING IS PERMISSIBLE ONLY IF FOLLOWED BY CARBIDE BURRS. PLASMA CUT EDGES ALSO REQUIRE CARBIDE BURRING.

ALL HEAT NO'S MUST BE RECORDED, & MAINTAINED. PARTS ARE TO BE VIBRO-ETCHED ON THE O.D. ONLY.

NO MARKING ON THE PART I.D. AT ALL, AND NO MARKERS ON THE MATERIAL. MARKINGS ON THE O.D ON 3M YELLOW NUCLEAR TAPE # 483 PURCHASED FOR THIS JOB, MARKINGS ON THIS MATERIAL ONLY.

SEQ	W/C	OPR	DESCRIPTION	DPT	PCS/ASY	OP. QTY	OVERLAP	S/U STD	PROD STD	PROD HRS	START	DUE	IN
10	FC1	070	Plasma Cut	FC	1.00	15		.00		150.00			

PLASMA CUT ITEMS PER B.O.M., & DNC.

ITEM 12 DNC MAKES 7 PCS, 4 PCS REQUIRED, PER UNIT.

RECORD ALL HEAT NUMBERS FOR EACH PART.

BY: [signature] DATE: 09/27/96

SEQ	W/C	OPR	DESCRIPTION	DPT	PCS/ASY	OP. QTY	OVERLAP	S/U STD	PROD STD	PROD HRS	START	DUE	IN
15	HC8	615	Machine per print	HB	1.00	15		.00		50.00			

MACHINE THE FIT-UP PREP. TO THE 105.5" O.D. CYLINDER

N/A JAB

PROG: JC4100
USER: DRB

PRODUCTION

ROUTING SHEET
--- SHOP COPY ---

PAGE:
DATE: 9/24
TIME: 15.12

COMPANY: 1 RANOR, INC.

JOB/LOT NUMBER	JOB DESC.	PART NUMBER	PART DESCRIPTION	- CODES - REV #	JOB USER	CUSTOMER P.O. N
7300FM	LIGO VACUMM CHAMBER	V049-4-101	PST BEAM SPLITTER CHAMBERS			555822

LEVEL OF ASSY: 1E	REV	PART NUMBER	PART DESCRIPTION	PROD QTY	START DATE	DUE DATE	PARENT LEVEI
		V049-4-101 LEV 1E	P.S.I. 1/2", 60"PORTS	15	4/10/95	2/14/97	

OPERATIONS:

SEQ	W/C	OPR	DESCRIPTION	DPT	PCS/ASY	OP. QTY	OVERLAP	S/U STD	PROD STD	PROD HRS	START	DUE	IN

INCLUDING THE 3/16 WELD PREP.

BY: _____ DATE: _____

20 BV1 200 Bevel to Spec. BV 1.00 15 .00 180.00

PROTECT THE INSIDE SURFACE FROM DIRT, & OILS.

USE ALUMINUM SHOES WITH BEVELER TO AVOID CARBON STEEL CONTACT WITH THE INSIDE OF THE SHELL.

PREP THE EDGES OF ITEM 12, AS REQUIRED.

PER DRAWING DETAIL 9, FOR SEAM WELDS, AND DETAIL 28 FOR ANY ADDITIONAL PREPS REQUIRED FOR FIT-UP.
AS WELL AS SKETCH # 7.

BY: KM DATE: —

25 PB1 260 Bump - Start PB 1.00 15 .00 90.00

VERIFY THE DIRECTION OF ROLLING WITH REFERENCE TO THE WELD PREPS, PRIOR TO FORMING.

USE ALUMINUM AND OR CARPET PURCHASED FOR THIS PROJECT TO AVOID ANY CARBON STEEL CONTACT WITH THE INSIDE OF THE VESSEL

BUMP START ENDS OF ITEM 12, PER SKETCH 7.

BY: BG DATE: 9-26-96

30 RO1 300 Roll Forming RO 1.00 15 .00 375.00

VERIFY THE INSIDE SURFACE PRIOR TO ROLLING, & THAT BEVELS ARE CORRECT WITH REFERENCE TO THE I.D..

ROLL ITEM 12 PER DRAWING DETAIL 10, SHEET 3, AND SKETCH 7.

BY: DR DATE: 10-1-96

35 QC2 585 Dimensional Inspection QC 1.00 15 .00 150.00

PROG: JC4100 PRODUCTION

USER: DRB

ROUTING SHEET

---- SHOP COPY ----

PAGE: 4
DATE: 9/24
TIME: 15.12

COMPANY: 1 RANOR, INC.

JOB/LOT NUMBER	JOB DESC.	PART NUMBER	PART DESCRIPTION	- CODES - REV # JOB USER	CUSTOMER P.O. N
7300FM	LIGO VACUUM CHAMBER	V049-4-101	PSI BEAM SPLITTER CHAMBERS		555022

LEVEL OF ASSY: 1E REV	PART NUMBER	PART DESCRIPTION	PROD QTY	START DATE	DUE DATE	PARENT LEVEL
	V049-4-101 LEV 1E	P.S.I. 1/2", 60"PORTS	15	4/10/95	2/14/97	

OPERATIONS:

SEQ	W/C	OPR	DESCRIPTION	DPT	PCS/ASY	OP. QTY	OVERLAP	S/U STD	PROD STD	PROD HRS	START	DUE	IN
			INSPECT ALL ITEMS PRIOR TO WELDING, & FIT-UP PER DRAWINGS AND SKETCHES.										
			INSPECTED BY: _____ DATE: _____										
40	AF1	400	Welding Assembly-Fitting	AS	1.00	15		.00		150.00			
			FIT-UP FOR WELDING THE LONGITUDINAL SEAMS OF ITEMS [redacted] 12 REFERENCE DRAWING DETAILS, SKETCHES, AND WELD MAPS.										
			BY: _____ DATE: _____										
45	QC2	560	Fit Up Inspection	QC	1.00	15		.00		45.00			
			INSPECT THE FIT-UP FOR WELD OF THE ABOVE ITEMS.										
			INSPECTED BY: _____ DATE: _____										
			REF. P.S.I. QUALITY PLAN SEQ. G. , NO CUSTOMER WITNESS REQ. FOR FIT-UP.										
50	WE1	466	GTAW-SS	WE	1.00	15		.00		450.00			
			REFERENCE THE WELD PROCEDURES, WELD MAPS, & DRAWING DETAILS.										
			SIGN OFF WELDING FOR EACH OF THE 20 NOZZES ON EACH OF THEIR INDIVIDUAL WELD MAPS.										
			BY: _____ DATE: _____										
55	QC3	573	Visual Inspection	QC	1.00	15		.00		60.00			
			INSPECT WELDS ON LOGNITUDAL SEAMS OF THE ABOVE ITEMS										
			SIGN OFF ON THIS OPERATION SEQUENCE, & WELD NDE REPORT.										
			INSPECTED BY: (RANOR Q.C.) _____ DATE: _____										
			INSPECTED BY: (P.S.I.) [signature] DATE 2-5-97										
			REF. P.S.I. QUALITY PLAN SEQ.G.										

PROG: JC4100 PRODUCTION

USER: DRB

ROUTING SHEET

--- SHOP COPY ---

PAGE: 5
DATE: 9/24
TIME: 15.12

COMPANY: 1 RANOR, INC.

JOB/LOT NUMBER	JOB DESC.	PART NUMBER	PART DESCRIPTION	- CODES - REV # JOB USER	CUSTOMER P.O.
7500FE	LIGO VACUUM CHAMBER	V049-4-101	P.S.I. BEAM SPLITTER CHAMBERS		535822

LEVEL OF ASSY: 1E	REV	PART NUMBER	PART DESCRIPTION	PROD QTY	START DATE	DUE DATE	PARENT LEVEL
		V049-4-101 LEV 1E	P.S.I. 1/2", 60"PORTS	15	4/10/95	2/14/97	

OPERATIONS:

SEQ	W/C	OPR	DESCRIPTION	DPT	PCS/ASY	OP. QTY	OVERLAP	S/U STD	PROD STD	PROD HRS	START	DUE	IN
60	PB1	265	REROUND	PB	1.00	15		.00		90.00			

60" Ports DJW 10-10-96

RE-ROUND ALL ~~CYLINDERS, & PORTS~~ PER SKETCHES.

BY: _____ DATE: _____

65	QC3	585	Dimensional Inspection	QC	1.00	15		.00		60.00			

INSPECT FINSIHED PORTS, PER DRAWING, & SKETCHES.

INSPECTED BY: (RANOR Q.C.)_____ DATE:_____

70	AF1	400	Welding Assembly-Fitting	AS	1.00	15		.00		60.00			

ASSEMBLE SPIDERS, & RE-ROUNDING FIXTURES FOR ASSEMBLY.
TO LOWER SHELL.

BY: SI DATE: —

SEE NEXT LEVEL OF ASSEMBLY LEVEL 1, LOWER SHELL ASSEMBLY.

PROG: JC4100 **PRODUCTION** ROUTING SHEET **Level:2 Unit:3.** PAGE: 2
USER: DRB --- SHOP COPY --- DATE: 11/1
TIME: 9.1

COMPANY: 1 RANOR, INC.

JOB/LOT NUMBER	JOB DESC.	PART NUMBER	PART DESCRIPTION	REV #	- CODES - JOB USER	CUSTOMER P.O.
7300FM	LIGO VACUMM CHAMBER	V049-4-101	PSI BEAM SPLITTER CHAMBERS			555822

LEVEL OF ASSY:	REV	PART NUMBER	PART DESCRIPTION	PROD QTY	START DATE	DUE DATE	PARENT LEVEL
2		V049-4-101 LEV 2	P.S.I. UPPER CHAMBER	15	9/24/96	2/14/97	

OPERATIONS:

SEQ	W/C	OPR	DESCRIPTION	DPT	PCS/ASY	OP. QTY	OVERLAP	S/U STD	PROD STD	PROD HRS	START	DUE	IN

.
THIS LEVEL 2 IS FOR THE FABRICATION, & MACHINING OF THE
UPPER SHELL ASSEMBLY. REF. DRAWING V049-4-101, & V049-4-003.
.
SPECIAL PRECAUTIONS MUST BE TAKEN NOT TO HAVE CARBON STEEL
IN CONTACT WITH THIS VESSEL MATERIAL, AS WELL AS NO
OILS, & OR HYDROCARBON CONTAMINATIONS OF ANY TYPE.
.
WELDING BY QUALIFIED WELDERS ONLY, USING GTAW, & PAW
IN ACCORDANCE WITH PROCEDURES: P-P8-P8-1, REV.0 AND
T-P8-P8-PSI, REV.0.
.
NO AIR TOOLS CAN BE USED FOR PROCESSING THIS MATERIAL
USE ONLY ELECTRIC TOOLS . GRINDING IS ALLOWED PROVIDED THE
EDGE IS CARBIDE BURRED TO CLEAN METAL. ALL PLASMA CUT EDGES
MUST ALSO BE CLEANED WITH CARBIDE BURRS.
.
ALL MATERIALS SUPPLIED BY THE CUSTOMER
MAT'L: 304 L, STAINLESS STEEL.
.
REFER TO LEVELS BELOW FOR COMPONENT PART FABRICATION:
.
LEVEL 2A: UPPER SHELL, (item 4)
.
LEVEL: 2B, UPPER HEAD. (item 65)
.
LEVEL: 2C, TOP FLANGE, & MISC. PARTS. (items 6,17,18,
19, 34, 50, & 63).
.
LEVEL: 2D, MACHINED FLANGE ASSEMBLIES.
.
LEVEL 90: ALL RANOR FIXTURING
.

10	FN1	500	STEAM CLEANING	FN	1.00	15		.00		4.00	9/24/96	9/24/96	

.
STEAM CLEAN USING OAKITE 1300 ONLY, FOLLOWED BY STEAM ONLY
.
BY: SI DATE: 11/15/96
.

15	AF1	400	Welding Assembly-Fitting	AS	1.00	15		.00		15.00	9/24/96	9/25/96	

.
PRIOR TO FIT-UP, SEE DIMESIONAL INSPECTION REPORTS ON THE
HEADS, AND UPPER SHELLS. MATCH SHELLS TO HEADS AS REQUIRED.

PROG: JC4100
USER: DRB

PRODUCTION

ROUTING SHEET
--- SHOP COPY ---

PAGE:
DATE: 11/1
TIME: 9.1

COMPANY: 1 RANOR, INC.

JOB/LOT NUMBER	JOB DESC.	PART NUMBER	PART DESCRIPTION	- CODES - REV # JOB USER	CUSTOMER P.O.
7300FM	LIGO VACUMM CHAMBER	V049-4-101	PSI BEAM SPLITTER CHAMBERS		555822

LEVEL OF ASSY:	REV	PART NUMBER	PART DESCRIPTION	PROD QTY	START DATE	DUE DATE	PARENT LEVEL
2		V049-4-101 LEV 2	P.S.I. UPPER CHAMBER	15	9/24/96	2/14/97	

OPERATIONS:

SEQ	W/C	OPR	DESCRIPTION	DPT	PCS/ASY	OP. QTY	OVERLAP	S/U STD	PROD STD	PROD HRS	START	DUE	IN

FIT-UP, & ASSEMBLE THE HEAD ITEM 14 TO THE TOP SHELL ITEM 4 PER DRAWING SHEET 2, DETAIL 4.

HAVE Q.C. VERIFY & SIGN OFF ON SEQ. NO. 20

HEAD TO SHELL FIT-UP:

BY: SF DATE: 11/20/96

FIT-UP & ASSEMBLE THE STIFFNING RING ITEM 17 TO THE ~~LOWER~~ UPPER FS SHELL.

BY: CT DATE: 11/20/96

20 QC2 560 Fit Up Inspection — QC 1.00 — 15 — .00 — 60.00 — 9/25/96 — 10/01/96

INSPECT THE FIT-UP OF THE HEAD TO THE TOP SHELL, ALL FIT-UPS MUST BE WITHIN 1/16" .

REF. P.S.I QUALITY PLAN SEQ. I1

HEAD TO SHELL FIT-UP:

INSPECTED BY: (RANOR Q.C.) F.S. DATE: 11-21-96

STIFFNER ITEM 17 TO SHELL FIT-UP:

INSPECTED BY: (RANOR Q.C.) Fred Stoll. DATE: 12-19-96

25 WE1 466 GTAW / PAW-SS — WE 1.00 — 15 — .00 — 300.00 — 10/01/96 — 10/28/96

WELD HEAD TO UPPER SHELL PER DRAWING, & WELD MAP.

REF. WELD PROCEDURES ABOVE: GTAW, & PAW ONLY.

ALL WELDING BY QUALIFIED WELDERS ONLY.
HEAD TO SHELL WELDING:
BY: [illegible] DATE: 12-18-96

STIFFNER TO SHELL WELDING (item 17 to 4)

PROG: JC4100
USER: DRB
COMPANY: 1 RANOR, INC.

PRODUCTION

ROUTING SHEET

--- SHOP COPY ---

JOB/LOT NUMBER	JOB DESC.	PART NUMBER	PART DESCRIPTION	- CODES - REV #	JOB USER	CUSTOMER P.O.
7300FM	LIGO VACUMM CHAMBER	V049-4-101	PSI BEAM SPLITTER CHAMBERS			555822

LEVEL OF ASSY:	REV	PART NUMBER	PART DESCRIPTION	PROD QTY	START DATE	DUE DATE	PARENT LEVEL
2		V049-4-101 LEV 2	P.S.I. UPPER CHAMBER	15	9/24/96	2/14/97	

OPERATIONS:

SEQ	W/C	OPR	DESCRIPTION	DPT	PCS/ASY	OP. QTY	OVERLAP	S/U	STD	PROD STD	PROD HRS	START	DUE	IN
			BY: [illegible] DATE: 12-18-96											
30	QC2	573	Visual Inspection	QC	1.00	15			.00		30.00	10/28/96	10/30/96	
			INSPECT THE HEAD TO SHELL WELDS											
			INSPECTED BY: (RANOR Q.C.) [signature] DATE: 12-19-96											
			INSPECTED BY: (P.S.I.) [signature] DATE: 12-97											
35	AF1	400	Welding Assembly-Fitting	AS	1.00	15			.00		60.00	10/30/96	11/05/96	
			FIT-UP, & ASSEMBLE LIFT LUGS, AND PUMP REPAD PER DRAWING SHEET 2, DETAIL 21, AND WELD MAP. REF. ITEMS 19, 50, & 63.											
			BY: W DATE: 12/19/96											
40	QC2	560	Fit Up Inspection	QC	1.00	15			.00		30.00	11/05/96	11/07/96	
			INSPECT LIFT LUG FIT-UP PER DRAWING.											
			INSPECTED BY: (RANOR Q.C.) [signature] DATE: 12-19-96											
			PSI INSPECTION NOT REQUIRED. REF. P.S.I. QUALITY PLAN SEQUENCE J1											
45	WE1	466	GTAW / PAW - SS	WE	1.00	15			.00		75.00	11/07/96	11/14/96	
			WELD THE LIFTING LUGS TO UPPER SHELL PER DRAWING SHEET 3, DETAILS 4, & 21. REF.WELD & CLEANING PROCEDURES AS WELL AS WELD MAP.											
			BY: W DATE: 12/20/96											
50	QC2	573	Visual Inspection	QC	1.00	15			.00		30.00	11/14/96	11/18/96	
			INSPECT LIFT LUG WELDS											
			INSPECTED BY: (RANOR Q.C.) [signature] DATE: 12/20/96											
			REF. P.S.I. QUALITY PLAN SEQUENCE J1, PSI INSP. NOT REQUIRED											

PROG: JC4100
USER: DRB

ROUTING SHEET

--- SHOP COPY ---

PAGE: 5
DATE: 11/11
TIME: 9.19

COMPANY: 1 RANOR, INC.

JOB/LOT NUMBER	JOB DESC.	PART NUMBER	PART DESCRIPTION	REV #	- CODES - JOB USER	CUSTOMER P.O. N
7300FM	LIGO VACUMM CHAMBER	V049-4-101	PSI BEAM SPLITTER CHAMBERS			555822

LEVEL OF ASSY:	REV	PART NUMBER	PART DESCRIPTION	PROD QTY	START DATE	DUE DATE	PARENT LEVEI
2		V049-4-101 LEV 2	P.S.I. UPPER CHAMBER	15	9/24/96	2/14/97	

OPERATIONS:

SEQ	W/C	OPR	DESCRIPTION	DPT	PCS/ASY	OP. QTY	OVERLAP	S/U STD	PROD STD	PROD HRS	START	DUE	IN
55	HC4	615	Mach. Port Holes per Routing.	HB	1.00	15		.00		450.00	11/18/96	1/02/97	

SEE MATERIAL HANDLING CAUTIONS SHEET 1

USE ONLY CLEAN WATER SOLUABLE COOLANT REF. CINCINNATI MILACRON " CIMTECK 410 " FOR COOLANT / LUBRICATION.

LAYOUT THE TWO PORT LOCATIONS PER DRAWING, SHEET 3 HAVE Q.C. VERIFY LAYOUT. AND MILL / BORE THE TWO LOCATION FOR THE 14" O.D. PORTS.

BY: JR DATE: 1-31-97

SEQ	W/C	OPR	DESCRIPTION	DPT	PCS/ASY	OP. QTY	OVERLAP	S/U STD	PROD STD	PROD HRS	START	DUE	IN
60	QC2	585	Dimensional Inspection	QC	1.00	15		.00		45.00	1/02/97	1/07/97	

INSPECT THE 14" DIA. PORT LOCATIONS AS WELL AS THE FLANGE END WELD PREP.

INSPECTED BY:(RANOR Q.C. RG DATE: 1-30-97

INSPECTED BY: (P.S.I.) [signature] DATE: 2-4-97

REF. P.S.I. INSPECTION PLAN SEQ. M1

SEQ	W/C	OPR	DESCRIPTION	DPT	PCS/ASY	OP. QTY	OVERLAP	S/U STD	PROD STD	PROD HRS	START	DUE	IN
65	AF1	400	Welding Assembly-Fitting	AS	1.00	15		.00		60.00	1/07/97	1/10/97	

ASSEMBLE AND FIT-UP NOZZLE REINFORCEMENTS, ITEM 18 , TWO PLACES. PER DWG. SHEET 2, DETAIL 5.

BY: DPL DATE: 1-30-97

SEQ	W/C	OPR	DESCRIPTION	DPT	PCS/ASY	OP. QTY	OVERLAP	S/U STD	PROD STD	PROD HRS	START	DUE	IN
70	WE1	466	PAW / GTAW-SS	WE	1.00	15		.00		150.00	1/10/97	1/23/97	

WELD NOZZLE REINFORCEMENTS PER DRAWING SHEET 2, DETAIL 5, AND WELD MAPS.

BY: MW DATE: 2-3-97

SEQ	W/C	OPR	DESCRIPTION	DPT	PCS/ASY	OP. QTY	OVERLAP	S/U STD	PROD STD	PROD HRS	START	DUE	IN
75	QC2	573	Visual Inspection	QC	1.00	15		.00		45.00	1/23/97	1/27/97	

INSPECT WELDING OF NOZZLE REPADS.

PROG: JC4100 PRODUCTION

USER: DRB

ROUTING SHEET

--- SHOP COPY ---

PAGE: 6
DATE: 11/11
TIME: 9.19

COMPANY: 1 RANOR, INC.

JOB/LOT NUMBER	JOB DESC.	PART NUMBER	PART DESCRIPTION	- CODES - REV # JOB USER	CUSTOMER P.O. N
7300FM	LIGO VACUMM CHAMBER	V049-4-101	PSI BEAM SPLITTER CHAMBERS		555822

LEVEL OF ASSY:	REV	PART NUMBER	PART DESCRIPTION	PROD QTY	START DATE	DUE DATE	PARENT LEVEI
2		V049-4-101 LEV 2	P.S.I. UPPER CHAMBER	15	9/24/96	2/14/97	

OPERATIONS:

SEQ	W/C	OPR	DESCRIPTION	DPT	PCS/ASY	OP. QTY	OVERLAP	S/U STD	PROD STD	PROD HRS	START	DUE	IN
			INSPECTED BY: (RANOR Q.C.) W.R.T. DATE: 2.5.97										
			REF. P.S.I. QUALITY PLAN SEQ. N1										
			NO PSI INSPECTION REQUIRED.										
80	AF1	400	Welding Assembly-Fitting	AS	1.00		15	.00		30.00	1/27/97	1/29/97	
			FIT-UP THE 14" NOZZLES TO THE UPPER SHELL.										
			BY: SF DATE: 2/4/97										
85	WE1	466	PAW / GTAW-SS	WE	1.00		15	.00		60.00	1/29/97	2/03/97	
			WELD THE 14" DIA. NOZZLES TWO PLACES, PER DRAWING DETAIL 5, AND WELD MAP.										
			BY: MW DATE: 2-4-97										
90	QC2	573	Visual Inspection	QC	1.00		15	.00		30.00	2/03/97	2/05/97	
			INSPECT THE WELDING OF THE 14" NOZZLES TO THE UPPER SHELL										
			INSPECTED BY: (RANOR Q.C.) W.R.T. DATE: 2-5-97										
			REF. P.S.I. QUALITY PLAN SEQ. J1.										
95	WE1	466	GTAW-SS	WE	1.00		15	.00		10.00	2/05/97	2/06/97	
			WELD ITEM 9 FLANGE ASSEMBLIES TO UPPER SHELL PER DRAWING DETAIL 5, AND WELD MAPS.										
			BY: MW DATE: 2-4-97										
100	QC2	573	Visual Inspection	QC	1.00		15	.00		60.00	2/06/97	2/11/97	
			INSPECT WELDING OF FLANGES PER DRAWING, & WELD MAP.										
			INSPECTED BY:(RANOR Q.C.) W.R.T. DATE: 2-5-97										
			REF. P.S.I. QUALITY PLAN SEQ. P1										

PROG: JC4100
USER: DRB

PROTOTYPE

ROUTING SHEET

--- SHOP COPY ---

PAGE: 7
DATE: 11/11
TIME: 9.19

COMPANY: 1 RANOR, INC.

JOB/LOT NUMBER	JOB DESC.	PART NUMBER	PART DESCRIPTION	REV	- CODES - #	JOB	USER	CUSTOMER P.O. N
7300FM	LIGO VACUMM CHAMBER	V049-4-101	PSI BEAM SPLITTER CHAMBERS					555822

LEVEL OF ASSY:	REV	PART NUMBER	PART DESCRIPTION	PROD QTY	START DATE	DUE DATE	PARENT LEVEI
2		V049-4-101 LEV 2	P.S.I. UPPER CHAMBER	15	9/24/96	2/14/97	

OPERATIONS:

SEQ	W/C	OPR	DESCRIPTION	DPT	PCS/ASY	OP. QTY	OVERLAP	S/U	STD	PROD STD	PROD HRS	START	DUE	IN
			NO PSI INSPECTION REQUIRED.											
105	FN1	500	STEAM CLEANING	FN	1.00	15		.00			60.00	2/11/97	2/14/97	

STEAM CLEAN WITH STEAM ONLY AND PREP FOR SHIPPMENT.

BY: _____ DATE: _____

NEXT LEVEL OF ASSEMBLY LEVEL 1 FOR THE WELDING OF THE UPPER CYLINDER TO THE FLANGE

PROG: JC4100

USER: DRB

PRODUCTION

ROUTING SHEET

--- SHOP COPY ---

Level 2A

Units 1 - 5

PAGE: 2

DATE: 9/30

TIME: 11.30

COMPANY: 1 RANOR, INC.

JOB/LOT NUMBER	JOB DESC.	PART NUMBER	PART DESCRIPTION	- CODES - REV #	JOB USER	CUSTOMER P.O. N
7300FM	LIGO VACUMM CHAMBER	V049-4-101	PSI BEAM SPLITTER CHAMBERS			555822

LEVEL OF ASSY: 2A	REV	PART NUMBER	PART DESCRIPTION	PROD QTY	START DATE	DUE DATE	PARENT LEVEI
		V049-4-101 LEV 2A	P.S.I. UPPER SHELL, & PORTS	15	10/23/96	2/14/97	

OPERATIONS:

SEQ	W/C	OPR	DESCRIPTION	DPT	PCS/ASY	OP. QTY	OVERLAP	S/U STD	PROD STD	PROD HRS	START	DUE	IN

.

THIS LEVEL IS FOR THE FABRICATION OF THE UPPER SHELL, ITEMS 4, PER DWG. # V049-4-003, AND THE B.O.M..

.

SPECIAL PRECAUTIONS MUST BE TAKEN TO AVOID ANY CARBON STEEL CONTACT WITH THE INSIDE OF THIS SHELL, & PORTS. NO OIL & OR HYDROCARBON CONTAMINATION IS ALLOWED.

.

NO AIR TOOLS CAN BE USED FOR PROCESSING THIS MATERIAL. USE ONLY ELECTRIC TOOLS, GRINDING IS ALLOWED PROVIDED THE GROUND EDGE IS CLEANED WITH A CARBIDE BURR. PLASMA CUT EDGES ALSO REQUIRE CARBIDE BURRING FOR REMOVAL OF BURNT EDGE.

.

ALL HEAT #'S MUST BE RECORDED, & MAINTAINED. PARTS MUST BE VIBRO-ETCHED ONLY ON THE O.D. . NO MARKINGS OF ANY TYPE ARE ALLOWED ON THE I.D., AND NO MAGIC MARKERS ARE ALLOWED ON THE O.D..

.

10 FC1 070 Plasma Cut — FC 1.00 — 15 — .00 — 60.00 — 10/23/96 — 10/29/96

.

PLASMA CUT UPPER SHELL PER B.O.M., & PROGRAM # 1

.

RECORD ALL HEAT NUMBERS ON EACH PART.

.

BY: RPG DATE: 09/26/96

.dNB 9/30/96

20 BV1 200 Bevel to Spec. — BV 1.00 — 15 — .00 — 90.00 — 10/29/96 — 11/06/96

.

BEVEL THE LONG SEAM WELD PREP (both sides) PER DRAWING SHEET 3 DETAIL #9, AND SKETCH # 1.

.

SIGN OFF EACH SHELL AFTER PREP IS COMPLETE.

.

S/N 1 JG S/N 2 JG S/N 3 JG S/N 4 JG S/N 5 JG

.

WELD PREPS COMPLETE THIS LOT.

.

BY: JG DATE: 9/27/96

.

30 QC3 585 Dimensional Inspection — QC 1.00 — 15 — .00 — 1.50

.

INSPECT THE FINISHED WELD PREP PER SKETCH #1, SECTION A-A.

PROG: JC4100 **PRODUCTION** ROUTING SHEET PAGE: 3
USER: DRB --- SHOP COPY --- DATE: 9/30
TIME: 11.30

COMPANY: 1 RANOR, INC.

JOB/LOT NUMBER	JOB DESC.	PART NUMBER	PART DESCRIPTION	REV	- CODES - # JOB USER	CUSTOMER P.O. N
7300FM	LIGO VACUMM CHAMBER	V049-4-101	PSI BEAM SPLITTER CHAMBERS			555822

LEVEL OF ASSY: 2A	REV	PART NUMBER	PART DESCRIPTION	PROD QTY	START DATE	DUE DATE	PARENT LEVEI
		V049-4-101 LEV 2A	P.S.I. UPPER SHELL, & PORTS	15	10/23/96	2/14/97	

OPERATIONS:

SEQ	W/C	OPR	DESCRIPTION	DPT	PCS/ASY	OP. QTY	OVERLAP	S/U	STD	PROD STD	PROD HRS	START	DUE	IN

RECORD EACH SERIAL NUMBER INSPECTED BELOW, & I.D. THE PART.

S/N JPM S/N JPM S/N JPM S/N JPM S/N JPM

ABOVE INSPECTIONS COMPLETED FOR THIS LOT.

BY: J P Magnus DATE: 9-28-96

40 PB1 260 Bump - Start PB 1.00 15 .00 90.00 11/06/96 11/14/96

BUMP START ENDS OF ITEM 4, FOR ROLLING PER SKETCH.

SIGN OFF EACH UNIT WHEN COMPLETED.

S/N 1 S/N 2 S/N 3 S/N 4 S/N 5

OPERATION COMPLETED FOR THIS LOT.

BY: [signature] DATE: 10/5/96

50 RO1 300 Roll Forming RO 1.00 15 .00 180.00 11/14/96 12/03/96

ROLL THE UPPER CYLINDER ITEM 4, PER SKETCH #1.

SIGN OFF EACH CYLINDER WHEN ROLLED

S/N 1 DP. S/N DP. S/N DP. S/N DP. S/N DP.

10-27-96

OPERATION COMPLETED FOR THIS LOT OF PARTS.

BY: DP. DATE: 10-7-96

70 AF1 400 Welding Assembly-Fitting AS 1.00 15 .00 120.00 12/03/96 12/12/96

FIT-UP, & ASSEMBLE THE UPPER SHELL ITEM 4 WITH FIXTURING
AS REQUIRED. REF. DWG. SHEET 3, DET 9.
MAXIMUM MIS-MATCH 1/16".

REF. RANOR WELD PROCEDURE T-P8-P8-1-PSI, REV. 0 (GTAW)

SIGN OFF EACH UNIT WHEN COMPLETE.

COMPANY: 1 RANOR, INC.

JOB/LOT NUMBER	JOB DESC.	PART NUMBER	PART DESCRIPTION	REV	- CODES - #	JOB USER	CUSTOMER P.O. N
7300FM	LIGO VACUMM CHAMBER	V049-4-101	PSI BEAM SPLITTER CHAMBERS				555822

LEVEL OF ASSY: 2A	REV	PART NUMBER	PART DESCRIPTION	PROD QTY	START DATE	DUE DATE	PARENT LEVEI
		V049-4-101 LEV 2A	P.S.I. UPPER SHELL, & PORTS	15	10/23/96	2/14/97	

OPERATIONS:

SEQ	W/C	OPR	DESCRIPTION	DPT	PCS/ASY	OP. QTY	OVERLAP	S/U STD	PROD STD	PROD HRS	START	DUE	IN

S/N_____ S/N_____ S/N 3-RR S/N_____ S/N_____

OPERATION COMPLETED FOR THIS LOT OF PARTS.

BY: _____ DATE:_____

75 QC2 560 Fit Up Inspection QC 1.00 15 .00 30.00 12/12/96 12/16/96

INSPECT FIT-UP OF WELD JOINTS:

MAX. ALIGNMENT TOL:
UP TO 1/2" PLATE 1/4 t.

REFERENCE WELD PROCEDURES FOR FIT-UP TOLERANCES .
SIGN OFF INSPECTION FOR EACH OF FIT-UPS CHECKED

S/N_____ S/N_____ S/N_____ S/N_____ S/N_____

OPERATION COMPLETED FOR THIS LOT OF PARTS.

INSP. BY: (RANOR Q.C.)_____ DATE:_____

P.S.I. INPROCESS INSPECTION NOT REQUIRED.

REF. P.S.I. QUALITY PLAN INSPECTION SEQ. G1

80 WE1 466 PAW -SS WE 1.00 15 .00 600.00 12/16/96 2/07/97

ALL WELDING BY QUALIFIED WELDERS ONLY.

WELD USING GTAW, & PAW PROCESSES LISTED BELOW:

SIGN OFF WELDING ON EACH OF THE CYLINDERS INDIVIDUAL
WELD MAP FOR EACH SERIAL NO.

SIGN OFF EACH SERIAL NUMBER WELDED.

S/N 1 W S/N 2 WW S/N 3 RR S/N 4 W S/N 5 W

P-P8-P8-2, REV.0 (PAW)

T-P8-P8-PSI, REV.0 (GTAW)

PROG: JC4100 PRODUCTION

USER: DRB

ROUTING SHEET

--- SHOP COPY ---

PAGE: 6
DATE: 9/30
TIME: 11.30

COMPANY: 1 RANOR, INC.

JOB/LOT NUMBER	JOB DESC.	PART NUMBER	PART DESCRIPTION	REV	- CODES - #	JOB USER	CUSTOMER P.O. N
7300FM	LIGO VACUMM CHAMBER	V049-4-101	PSI BEAM SPLITTER CHAMBERS				555822

LEVEL OF ASSY:	REV	PART NUMBER	PART DESCRIPTION	PROD QTY	START DATE	DUE DATE	PARENT LEVEI
		V049-4-101 LEV 2A	P.S.I. UPPER SHELL, & PORTS	15	10/23/96	2/14/97	

OPERATIONS:

SEQ	W/C	OPR	DESCRIPTION	DPT	PCS/ASY	OP. QTY	OVERLAP	S/U STD	PROD STD	PROD HRS	START	DUE	IN
			S/N_____ S/N_____ S/N_____ S/N_____ S/N_____										
			INSPECTION COMPLETED FOR THIS LOT OF PARTS.										
			INSP. BY: (RANOR Q.C.)_____ DATE: _____										
			INSP. BY: (PROCESS SYS.)_____ DATE: _____										
			REF. P.S.I. INSPECTION QUALITY PLAN SEQ. # H1										
130	FN1	480	Steam Clean Parts, Protect	FN	1.00	15		.00		30.00	2/13/97	2/14/97	
			STEAM CLEAN PARTS, AND PROTECT WITH PLASTIC. STORE PARTS IN PROCESS SYSTEMS " clean room " .										
			RECORD SERIAL NUMBER OF CYLINDER CLEANED.										
			S/N JA S/N JA S/N JA S/N JA S/N JA										
			NEXT LEVEL OF ASSEMBLY: LEVEL 2										

PROG: JC4100 PRODUCTION

USER: DRB

ROUTING SHEET

--- SHOP COPY ---

PAGE: 5
DATE: 9/30
TIME: 11.30

COMPANY: 1 RANOR, INC.

JOB/LOT NUMBER	JOB DESC.	PART NUMBER	PART DESCRIPTION	REV	- CODES - #	JOB USER	CUSTOMER P.O. N
7300FM	LIGO VACUMM CHAMBER	V049-4-101	PSI BEAM SPLITTER CHAMBERS				555822

LEVEL OF ASSY:	REV	PART NUMBER	PART DESCRIPTION	PROD QTY	START DATE	DUE DATE	PARENT LEVEI
2A		V049-4-101 LEV 2A	P.S.I. UPPER SHELL, & PORTS	15	10/23/96	2/14/97	

OPERATIONS:

SEQ	W/C	OPR	DESCRIPTION	DPT	PCS/ASY	OP. QTY	OVERLAP	S/U STD	PROD STD	PROD HRS	START	DUE	IN

OPERATION COMPLETED FOR THIS LOT OF PARTS.

BY: _____ DATE: _____

90 QC3 573 Visual Inspection QC 1.00 15 .00 30.00 2/07/97 2/10/97

INSPECT WELDS PER DRAWING AND SPECS. MAXIMUM RE-INFORCEMENT 3/16" to 1/2" MAT'L" IS 3/32"

SIGN OFF ON EACH OF THE INDIVIDUAL INSPECTION REPORTS.

RECORD WHICH CYLINDERS HAVE BEEN INSPECTED HERE:

S/N_____ S/N_____ S/N_____ S/N JPM S/N JPM

INSP. BY: (RANOR Q.C.)_____ DATE: _____

INSP. BY (PROCESS SYS.)_____ DATE: _____

REF. P.S.I. QUALITY PLAN SEQUENCE G1

100 RO1 310 Reroll Forming RO 1.00 15 .00 10.00 2/11/97 2/11/97

RE-ROUND ITEM #4 UPPER SHELL WITHIN 1/16"

RECORD SERIAL NUMBERS WHICH HAVE BEEN REROUNDED

S/N DP S/N DP S/N D.P. S/N DP S/N D.P.

OPERATION COMPLETED FOR THIS LOT OF PARTS.

BY: D.P. DATE: 1-21-97

120 QC3 585 Dimensional Inspection QC 1.00 15 .00 30.00 2/11/97 2/13/97

INSPECT FINAL FABRICATION OF ITEMS 4. (roundness)

RECORD THE I.D., & PIE TAPE THE O.D. FOR MATCHING TO THE FORMED HEAD.

RECORD SERIAL NUMBER OF INSPECTED PART.

PROG: JC4100 **PRODUCTION** ROUTING SHEET Level 2C Units 1 - 5 PAGE: 2

USER: DRB --- SHOP COPY --- DATE: 9/27

TIME: 9.15

COMPANY: 1 RANOR, INC.

JOB/LOT NUMBER	JOB DESC.	PART NUMBER	PART DESCRIPTION	- CODES - REV # JOB USER	CUSTOMER P.O. N
7300FM	LIGO VACUMM CHAMBER	V049-4-101	PSI BEAM SPLITTER CHAMBERS		555822

LEVEL OF ASSY: 2C	REV	PART NUMBER	PART DESCRIPTION	PROD QTY	START DATE	DUE DATE	PARENT LEVEI
		V049-4-101 LEV 2C	P.S.I. UPPER SHELL MISC. PARTS	15	12/19/96	2/14/97	

OPERATIONS:

SEQ	W/C	OPR	DESCRIPTION	DPT	PCS/ASY	OP. QTY	OVERLAP	S/U	STD	PROD STD	PROD HRS	START	DUE	IN

.

THIS LEVEL IS FOR THE FABRICATION OF THE UPPER FLANGE, &
MISC. PARTS FOR THE TOP SHELL. REF. DWR. V049-4-003 SHT 2.
AND 104 1/2" I.D. FLANGE DETAIL DWG. # V049-4-041. (item 6)

.

SPECIAL PRECAUTIONS MUST BE TAKEN TO AVOID ANY CARBON
STEEL CONTACT WITH THE INSIDE OF THIS VESSEL. NO OILS,
& OR HYDROCARBON CONTAMINATION IS ALLOWED.

.

NO AIR TOOLS CAN BE USED FOR PROCESSING THIS MATERIAL.
USE ONLY ELECTRIC TOOLS. GRINDING IS PERMISSIBLE
PROVIDED THE SURFACE IS CLEANED WITH A CARBIDE BURR AFTER.
ALL PLASMA CUT SURFACES MUST ALSO BE CARBIDE BURRED.

.

ALL HEAT NO.'S MUST BE RECORDED, & MAINTAINED. PARTS MUST
BE VIBRO -ETCHED ON THE O.D. ONLY. NO MARKINGS ON THE I.D.
AT ALL, AND NO MAGIC MARKER ON THE O.D.
MARKING ON THE O.D. ONLY ON 3M BRAND YELLOW NUCLEAR TAPE #
483, PURCHASED FOR THIS JOB.

.

ALL MATERIAL SUPPLIED BY THE CUSTOMER
MAT'L: 304 L, STAINLESS STEEL

.

WELDING BY QUALIFIED PERSONELL ONLY USING GTAW, & PAW
IN ACCORDANCE WITH PROCEDURES: P-P8-P8-1, REV 0, AND
T-P8-P8-PSI, REV. 0

.

10	FC1	070	Plasma Cut	FC	1.00	15			.00		90.00	12/19/96	12/31/96	

.

PLASMA CUT PARTS PER B.O.M., & DNC'S.

.

NOTE:

MATERAL FOR PARTS # 18, 18, 50, & 63 MUST
BE TAKEN FROM THE 59 1/2" DIA. DROPS FROM THE
LOWER SHELL PORTS. THIS STOCK HAS A 52 1/4"
INSIDE RADIUS.

.

THIS STOCK MUST BE TILTED TO A NEUTRAL CENTERLINE
AND PARTS BURN'T LINED UP WITH THE CENTERLINE
OF THE PART. SEE DNC'S, AND SKETCHES 4, & 5.

.

BY: Reg DATE: 1-2-97

.

PROG: JC4100

USER: DRB

PRODUCTION

ROUTING SHEET

--- SHOP COPY ---

PAGE:
DATE: 9/2
TIME: 9.1

COMPANY: 1 RANOR, INC.

JOB/LOT NUMBER	JOB DESC.	PART NUMBER	PART DESCRIPTION	REV #	- CODES - JOB USER	CUSTOMER P.O. N
7300FM	LIGO VACUMM CHAMBER	V049-4-101	PSI BEAM SPLITTER CHAMBERS			555822

LEVEL OF ASSY: 2C	REV	PART NUMBER	PART DESCRIPTION	PROD QTY	START DATE	DUE DATE	PARENT LEVEL
		V049-4-101 LEV 2C	P.S.I. UPPER SHELL MISC. PARTS	15	12/19/96	2/14/97	

OPERATIONS:

SEQ	W/C	OPR	DESCRIPTION	DPT	PCS/ASY	OP. QTY	OVERLAP	S/U	STD	PROD STD	PROD HRS	START	DUE	IN
20	S01	150	Saw Cut	SW	1.00	15			.00		30.00	12/31/96	1/03/97	

N/A JAB

SAW CUT ITEM 17 PER B.O.M. & SKETCH #3.

BY: _____ DATE: _____

25	FN1	502	Clean Edges For Assembly	FN	1.00	15			.00		60.00	1/03/97	1/08/97	

CLEAN EDGES OF PLASMA CUT PARTS USING CARBIDE BURRS
ALL PARTS MUST FIT FLUSH, NO SLAG ALLOWED.

BY: _____ DATE: _____

30	RO1	320	Pullmax Bar Roll	RO	1.00	15			.00		60.00	1/08/97	1/14/97	

N/A JAB

NOTE: THIS STOCK MAY BE ALREADY ROLLED

ROLL ITEM 17 PER SKETCH, IN HALVES, IF REQUIRED.

BY: _____ DATE: _____

35	EM2	600	Programming	EM	1.00	15			.00		30.00	1/14/97	1/16/97	

PROGRAM BOTTOM FLANGE ITEM # 6, PER DRAWING # V049-4-041

40	VC1	645	Turning	VB	1.00	15			.00		90.00	1/16/97	1/23/97	

NO OILS OR CARBON STEEL CAN COME IN CONTACT WITH THIS MATERIAL. USE CLEAN COOLANT "CINCINNATI MILICRON " CIMTECK 410 ONLY FOR MACHINING COOLANT / LUBRICATION.

N/A JAB

TURN COMPLETE PER DRAWING V-049-4-041, & PROGRAM INSTRUCTIONS.

NOTE: THE CIRCULAR LAY REQUIRED ON THE SEALING FACE, IS THE MOST CRITICAL FEATURE.

PROTECT ALL FINISHED SURFACES WITH CLEAN OUTDOOR CARPETING PURCHASED FOR THIS JOB.

BY: _____ DATE: _____

PROG: JC4100

USER: DRB

ROUTING SHEET

--- SHOP COPY ---

PAGE: 4
DATE: 9/27
TIME: 9.15

COMPANY: 1 RANOR, INC.

JOB/LOT NUMBER	JOB DESC.	PART NUMBER	PART DESCRIPTION	REV	- CODES - #	JOB	USER	CUSTOMER P.O. N
7300FM	LIGO VACUMM CHAMBER	V049-4-101	PSI BEAM SPLITTER CHAMBERS					555822

LEVEL OF ASSY: 2C	REV	PART NUMBER	PART DESCRIPTION	PROD QTY	START DATE	DUE DATE	PARENT LEVEI
		V049-4-101 LEV 2C	P.S.I. UPPER SHELL MISC. PARTS	15	12/19/96	2/14/97	

OPERATIONS:

SEQ	W/C	OPR	DESCRIPTION	DPT	PCS/ASY	OP. QTY	OVERLAP	S/U STD	PROD STD	PROD HRS	START	DUE	IN
45	R1	635	Drill	RD	1.00	15		.00		22.50	1/23/97	1/24/97	

DRILL 2X, 1/8" VENT HOLES IN ITEM # 18, PER DRAWING.
SHEET 2, DETAIL 19.

BY: WH DATE: 12/1/96

55	BV1	200	Bevel to Spec.	BV	1.00	15		.00		45.00	1/24/97	1/29/97	

BEVEL ENDS OF ITEM # 17 PER SKETCH # 3

BY: W.A. DATE: 12/1/96

60	AF1	400	Welding Assembly-Fitting	AS	1.00	15		.00		60.00	1/29/97	2/03/97	

N/A JAB

FIT-UP ENDS OF ITEM 17 TO FORM A 360 DEG. STIFFENER.
SEE SHEET 4, DETAIL 18, SKETCH # 3, & WELD MAP.

BY: _____ DATE: _____

65	WE1	466	PAW -SS	WE	1.00	15		.00		45.00	2/03/97	2/06/97	

N/A JAB

WELD STIFFENER PER DRAWING, & SKETCH.

REF. RANOR WELD PROCEDURES, & WELD MAP.

ALL WELDING BY QUALIFIED WELDERS ONLY SEE APPROVED PROCEDURES LISTED ABOVE, AND MATERIAL HANDLING CAUTIONS.

BY: _____ DATE: _____

70	QC3	585	Dimensional Inspection	QC	1.00	15		.00		60.00	2/06/97	2/11/97	

N/A JAB

INSPECT FINISH PARTS PRIOR TO WELDING PER DRAWING AND SKETCHES.

INSP. BY (RANOR Q.C.) _____ DATE: _____

75	FN1	480	Steam Clean Parts	FN	1.00	15		.00		60.00	2/11/97	2/14/97	

STEAM CLEAN PARTS AND PROTECT WITH PLASTIC. STORE PARTS IN THE PROCESS SYSTEMS " clean room".

PROG: JC4100
USER: DRB

ROUTING SHEET

--- SHOP COPY ---

PAGE: 5
DATE: 9/27
TIME: 9.15

COMPANY: 1 RANOR, INC.

JOB/LOT NUMBER	JOB DESC.	PART NUMBER	PART DESCRIPTION	- CODES - REV #	JOB USER	CUSTOMER P.O. N
7300FM	LIGO VACUMM CHAMBER	V049-4-101	PSI BEAM SPLITTER CHAMBERS			555822

LEVEL OF ASSY:	REV	PART NUMBER	PART DESCRIPTION	PROD QTY	START DATE	DUE DATE	PARENT LEVEI
2C		V049-4-101 LEV 2C	P.S.I. UPPER SHELL MISC. PARTS	15	12/19/96	2/14/97	

OPERATIONS:

SEQ	W/C	OPR	DESCRIPTION	DPT	PCS/ASY	OP. QTY	OVERLAP	S/U STD	PROD STD	PROD HRS	START	DUE	IN

BY: JB. DATE: -ONGOING

NEXT LEVEL OF ASSEMBLY LEVEL 2

PROG: JC4100 R O U T I N G S H E E T Level 2D Units 1 - 5 PAGE: 2
USER: DRB --- SHOP COPY --- DATE: 9/26
TIME: 11.38

COMPANY: 1 RANOR, INC.

JOB/LOT NUMBER	JOB DESC.	PART NUMBER	PART DESCRIPTION	REV	- CODES - #	JOB USER	CUSTOMER P.O. N
7300FM	LIGO VACUMM CHAMBER	V049-4-101	PSI BEAM SPLITTER CHAMBERS				555822

LEVEL OF ASSY: 2D	REV	PART NUMBER	PART DESCRIPTION	PROD QTY	START DATE	DUE DATE	PARENT LEVEL
		V049-4-101 LEV 2D	P.S.I. UP. FLNG-ASSY PRE-MACH.	15	11/26/96	2/14/97	

OPERATIONS:

SEQ	W/C	OPR	DESCRIPTION	DPT	PCS/ASY	OP. QTY	OVERLAP	S/U STD	PROD STD	PROD HRS	START	DUE	IN

THIS LEVEL 2D, IS FOR THE MACHINING OF THE UPPER SHELL FLANGE ASSEMBLIES FOR FIT-UP TO THE MAIN SHELL.

SPECIAL PRECAUTIONS MUST BE TAKEN TO AVOID CARBON STEEL CONTACT WITH THE INSIDE OF THIS VESSEL. ALSO NO OILS, AND OR HYDROCARBON CONTAMINATION OF ANY TYPE IS ALLOWED.

WELDING BY QUALIFIED WELDERS ONLY USING GTAW, & PAW IN ACCORDANCE WITH PROCEDURES: P-P8-P8-1, REV 0, AND T-P8-P8-PSI , REV.0 .

NO AIR TOOLS CAN BE USED FOR PROCESSING THIS MATERIAL, USE ONLY ELECTRIC TOOLS. GRINDING IS ALLOWED PROVIDED THE AREA IS CLEANED WITH A CARBIDE BURR. PLASMA CUT EDGES ALSO REQUIRE CARBIDE BURRING.

ALL HEAT NO'S MUST BE RECORDED, & MAINTAINED .
PARTS ARE TO BE VIBRO-ETCHED ON THE O.D. ONLY.
NO MARKINGS AT ALL ON THE I.D., AND NO MAGIC MARKERS ON THE O.D.. MARKING ON THE O.D. ON 3M YELLOW NUCLEAR TAPE # 483 PURCHASED FOR THIS JOB. MARK ON THIS TAPE ONLY.

MATERIAL: 304 L SUPPLIED BY THE CUSTOMER.

NOTE:
THESE ARE FINISHED MACHINED PARTS USE CAUTION AND PROTECT THE FLANGES, & I.D. FROM DAMAGE AND CONTAMINATION WITH OIL.

10	S01	150	Saw Cut	SW	1.00	15		.00		450.00	11/26/96	1/10/97	

USE CAUTION TO AVOID DAMAGING FINISHED MACHINED FLANGES.

SAW CUT ITEMS 9 A PER B.O.M. ,& DRAWING FOR MACHINIG

SAW PIPE OVERSIZED PER SKETCH.#1

BY: L.O. DATE: 12/1/96

15	M1	615	Machine per print	MI	1.00	15		.00		300.00	1/10/97	2/04/97	

PROG: JC4100

USER: DRB

ROUTING SHEET

--- SHOP COPY ---

PAGE: 1
DATE: 9/26
TIME: 11.38

COMPANY: 1 RANOR, INC.

JOB/LOT NUMBER	JOB DESC.	PART NUMBER	PART DESCRIPTION	- CODES - REV # JOB USER	CUSTOMER P.O. N
7300FM	LIGO VACUMM CHAMBER	V049-4-101	PSI BEAM SPLITTER CHAMBERS		555822

LEVEL OF ASSY: 2D	REV	PART NUMBER	PART DESCRIPTION	PROD QTY	START DATE	DUE DATE	PARENT LEVEI
		V049-4-101 LEV 2D	P.S.I. UP. FLNG-ASSY PRE-MACH.	15	11/26/96	2/14/97	

OPERATIONS:

SEQ	W/C	OPR	DESCRIPTION	DPT	PCS/ASY	OP. QTY	OVERLAP	S/U STD	PROD STD	PROD HRS	START	DUE	IN
			USE ONLY CLEAN CINCINNATI MILICRON CIMTECK 410 FOR MACHINE COOLANT.										
			PRE-MACHINE ITEMS 9A, PER DRAWING, FOR FIT-UP TO THE CYLINDER. PER DRAWING SHEET 3 DETAIL 13., AND SKETCH #1										
			BY: J.L. DATE: 1/2/97										
20	PB1	265	Reround	PB	1.00	15		.00		60.00	2/04/97	2/07/97	
			W/P - JOB										
			REROUND THE TUBE END ONLY AFTER MACHINIG THE FIT-UP.										
			BY: _____ DATE: _____										
25	FN1	500	Steam Cleaning	FN	1.00	15		.00		90.00	2/07/97	2/14/97	
			STEAM CLEAN USING " OAKITE " 1300 , FOLLOWED BY CLEAN STEAM										
			BY: JB DATE: _____										
			NEXT LEVEL OF ASSEMBLY: LEVEL 2										

PROG: JC4100

USER: DRB

ROUTING SHEET

--- SHOP COPY ---

Level 2D

Units 1 - 5

PAGE: 2
DATE: 9/26
TIME: 11.38

COMPANY: 1 RANOR, INC.

JOB/LOT NUMBER	JOB DESC.	PART NUMBER	PART DESCRIPTION	REV	- CODES - JOB USER	CUSTOMER P.O. N
7300FM	LIGO VACUMM CHAMBER	V049-4-101	PSI BEAM SPLITTER CHAMBERS			555822

LEVEL OF ASSY: 2D	REV	PART NUMBER	PART DESCRIPTION	PROD QTY	START DATE	DUE DATE	PARENT LEVEL
		V049-4-101 LEV 2D	P.S.I. UP. FLNG-ASSY PRE-MACH.	15	11/26/96	2/14/97	

OPERATIONS:

SEQ	W/C	OPR	DESCRIPTION	DPT	PCS/ASY	OP. QTY	OVERLAP	S/U STD	PROD STD	PROD HRS	START	DUE	IN

.
THIS LEVEL 2D, IS FOR THE MACHINING OF THE UPPER SHELL
FLANGE ASSEMBLIES FOR FIT-UP TO THE MAIN SHELL.
.
SPECIAL PRECAUTIONS MUST BE TAKEN TO AVOID CARBON STEEL
CONTACT WITH THE INSIDE OF THIS VESSEL. ALSO NO OILS,
AND OR HYDROCARBON CONTAMINATION OF ANY TYPE IS ALLOWED.
.
WELDING BY QUALIFIED WELDERS ONLY USING GTAW, & PAW
IN ACCORDANCE WITH PROCEDURES: P-P8-P8-1, REV 0, AND
T-P8-P8-PSI , REV.0 .
.
NO AIR TOOLS CAN BE USED FOR PROCESSING THIS MATERIAL,
USE ONLY ELECTRIC TOOLS. GRINDING IS ALLOWED PROVIDED
THE AREA IS CLEANED WITH A CARBIDE BURR. PLASMA CUT
EDGES ALSO REQUIRE CARBIDE BURRING.
.
ALL HEAT NO'S MUST BE RECORDED, & MAINTAINED .
PARTS ARE TO BE VIBRO-ETCHED ON THE O.D. ONLY.
NO MARKINGS AT ALL ON THE I.D., AND NO MAGIC MARKERS ON
THE O.D.. MARKING ON THE O.D. ON 3M YELLOW NUCLEAR TAPE #
483 PURCHASED FOR THIS JOB. MARK ON THIS TAPE ONLY.
.
MATERIAL: 304 L SUPPLIED BY THE CUSTOMER.
.
NOTE:
THESE ARE FINISHED MACHINED PARTS USE CAUTION
AND PROTECT THE FLANGES, & I.D. FROM DAMAGE AND
CONTAMINATION WITH OIL.
.

10	S01	150	Saw Cut	SW	1.00	15		.00		450.00	11/26/96	1/10/97	

.
USE CAUTION TO AVOID DAMAGING FINISHED MACHINED
FLANGES.
.
SAW CUT ITEMS 9 A PER B.O.M. ,& DRAWING FOR MACHINIG
.
SAW PIPE OVERSIZED PER SKETCH.#1
.
BY: L.O. DATE: 12/1/96
.

15	M1	615	Machine per print	MI	1.00	15		.00		300.00	1/10/97	2/04/97	

.

PROG: JC4100

USER: DRB

ROUTING SHEET

--- SHOP COPY ---

PAGE: 3
DATE: 9/26
TIME: 11.38

COMPANY: 1 RANOR, INC.

JOB/LOT NUMBER	JOB DESC.	PART NUMBER	PART DESCRIPTION	REV	- CODES - #	JOB USER	CUSTOMER P.O. N
7300FM	LIGO VACUMM CHAMBER	V049-4-101	PSI BEAM SPLITTER CHAMBERS				555822

LEVEL OF ASSY:	REV	PART NUMBER	PART DESCRIPTION	PROD QTY	START DATE	DUE DATE	PARENT LEVEI
2D		V049-4-101 LEV 2D	P.S.I. UP. FLNG-ASSY PRE-MACH.	15	11/26/96	2/14/97	

OPERATIONS:

SEQ	W/C	OPR	DESCRIPTION	DPT	PCS/ASY	OP. QTY	OVERLAP	S/U STD	PROD STD	PROD HRS	START	DUE	IN
			USE ONLY CLEAN CINCINNATI MILICRON CIMTECK 410 FOR MACHINE COOLANT.										
			PRE-MACHINE ITEMS 9A, PER DRAWING, FOR FIT-UP TO THE CYLINDER. PER DRAWING SHEET 3 DETAIL 13., AND SKETCH #1										
			BY: J.L. DATE: 1/2/97										
20	PB1	265	Reround	PB	1.00	15		.00		60.00	2/04/97	2/07/97	
			W/P - JOB										
			REROUND THE TUBE END ONLY AFTER MACHINIG THE FIT-UP.										
			BY: _____ DATE: _____										
25	FN1	500	Steam Cleaning	FN	1.00	15		.00		90.00	2/07/97	2/14/97	
			STEAM CLEAN USING " OAKITE " 1300 , FOLLOWED BY CLEAN STEAM										
			BY: JB DATE: —										
			NEXT LEVEL OF ASSEMBLY: LEVEL 2										

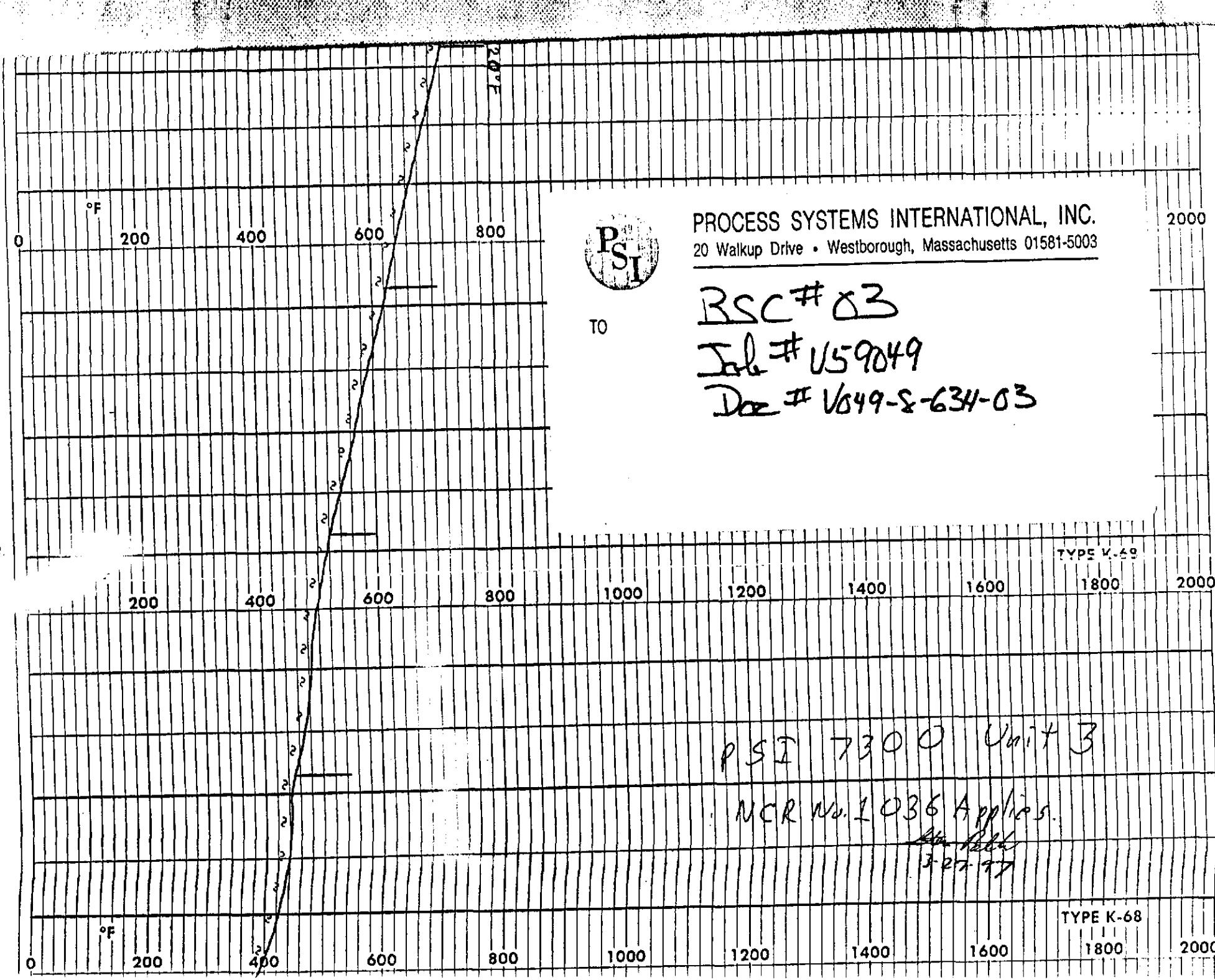
°F
0
200
400
600
800
1000
1200
1400
1600
1800
2000
TYPE K-68
PROCESS SYSTEMS INTERNATIONAL, INC.
20 Walkup Drive • Westborough, Massachusetts 01581-5003
TO
RSC # 03
Job # V59049
Doc # V049-8-634-03
PSI 7300 Unit 3
NCR No. 1036 Applies.
3-27-97

#4

HYSPAN

N/A

TAG# WBSC3 S/N 03 BSC #3

Title

SPECIFICATION FOR CLEANING PROCEDURE

Attachment

LIGO COMPONENT CLEANING DATA SHEET

Project V59049

Component	Serial Number
BEAM SPLITTER	WBSC3
LOWER HALF	V49930261
2 COVERS FOR TOT	
90° COVER	
180° COVER	

Wash Cycle: MANUAL

Flowrates: 30 GPM Max. Temp.: 146 Duration: 2 HRS

Operator: BRUCE / BILL Date: 6-5-97

Comments:

Component(s) Inspected By: [signature] Date: 6/5/97

Quality Assurance: [signature] Date: 6-9-97

Comments: PASSIVATED FOR EXTERNAL RUST

Number

Rev.

SPECIFICATION

Number A V049-2-015 Rev. 2

LIGO DATA SHEET
MANUAL WASH STATION

PART DESCRIPTION: BSC Bottom S/N: 3 WORK ORDER: 121
DATE/TIME: 6/4
OPERATOR: Bill / Bruce

NOTE:REMOVE ALL TIE RODS PRIOR TO WASHING

1.FILL D.I. WATER TANK XD-103 TO MARK.HEAT D.I. WATER USING PUMP XP-103 AND HTR.XP-102 TO 150.F.

TI925= 146 F

2.FILL POWER WASHER TANK WITH A 50% SOLUTION OF IMPRO CLEAN 1300 AND D.I. WATER.

MIX 1:1 /

3.APPLY SOAP SOLUTION TO ALL COMPONENT SURFACES WITH LARGE YELLOW NOZZLE IN POWER WASHER WAND AND SIPHON TUBE IN THE POWER WASHER TANK.

4.HAND SCRUB SURFACES WITH NYLON BRUSH WHERE NEEDED.

5.REMOVE SIPHON TUBE FROM TANK AND INSTALL GREEN NOZZLE INTO WAND.

6.POWER WASH COMPONENT. ALL SURFACES SLOWLY COVERED AT LEAST TWICE.

WASH TIME = 11½ MIN

7.POWER RINSE COMPONENT. ALL SURFACES SLOWLY COVERED AT LEAST TWICE.

RINSE TIME= 2½ MIN

8.REMOVE EXCESS WATER WITH VACUUM OR CLEAN AIR WAND.

9.ALLOW COMPONENT TO DRY BEFORE MOVING TO CLEAN ROOM.

DRY TIME= 10 MIN

NOTES: _____

BSC 3

Title

SPECIFICATION
Number A V049-2-184
Rev. 1

Number | Rev.

LIGO DA SHEET
MANUAL WASH STATION

PART DESCRIPTION: BSC TOP S/N: 3 WORK ORDER: 121
DATE/TIME: 6/94
OPERATOR: Bruce / Ray

NOTE:REMOVE ALL TIE RODS PRIOR TO WASHING

1.FILL D.I. WATER TANK XD-103 TO MARK.HEAT D.I. WATER USING PUMP XP-103 AND HTR.XP-102 TO 150.F. TI925= 146 F

2.FILL POWER WASHER TANK WITH A 50% SOLUTION OF IMPRO CLEAN 1300 AND D.I. WATER. MIX 1:1 ✓

3.APPLY SOAP SOLUTION TO ALL COMPONENT SURFACES WITH LARGE YELLOW NOZZLE IN POWER WASHER WAND AND SIPHON TUBE IN THE POWER WASHER TANK.

4.HAND SCRUB SURFACES WITH NYLON BRUSH WHERE NEEDED.

5.REMOVE SIPHON TUBE FROM TANK AND INSTALL GREEN NOZZLE INTO WAND.

6.POWER WASH COMPONENT. ALL SURFACES SLOWLY COVERED AT LEAST TWICE. WASH TIME = 20 MIN

7.POWER RINSE COMPONENT. ALL SURFACES SLOWLY COVERED AT LEAST TWICE. RINSE TIME= 70 MIN

8.REMOVE EXCESS WATER WITH VACUUM OR CLEAN AIR WAND.

9.ALLOW COMPONENT TO DRY BEFORE MOVING TO CLEAN ROOM. DRY TIME= 140 MIN

NOTES: Passivated Small area in Dome - 77 oil

SPECIFICATION
Number A V049-2-184 Rev. 1
Page 2 of 2

Title BSC 3

Number Rev.

TITLE	TEST ARTICLE PARAMETERS PUMPDOWN LOG
DATE:	6/22 - 6/25/97
TIME:	
TEST I.D.: e.g. WBSC1_1	WBSC 3
PSI TEST ENGINEER:	Am 6/27/97
QUALITY ASSURANCE:	

PHYSICAL DIMENSIONS				
S.S. SURFACE AREA		ft^2		cm^2
VITON LINEAL LENGTH		inches		cm
VOLUME		ft^3		liters
PUMPDOWN	TIME		PRESSURE	
6/23/97	1454	hr:min	1.8×10^{-6}	Torr
6/24/97	815	hr:min	2.0×10^{-5}	Torr
6/24/97	1145	hr:min	2.0×10^{-6}	Torr
6/25/97	1645	hr:min	1.9×10^{-6}	Torr
6/25/97	2030	hr:min	1.9×10^{-6}	Torr
6/25/97	0300	hr:min	1.5×10^{-7}	Torr
6/25/97	0520	hr:min	3.2×10^{-8}	Torr
6/25/97	0630	hr:min	1.6×10^{-8}	Torr
6/25/97	0945	hr:min	5.0×10^{-9}	Torr
		hr:min		Torr
		hr:min		Torr
		hr:min		Torr
		hr:min		Torr
		hr:min		Torr
		hr:min		Torr
		hr:min		Torr
		hr:min		Torr
		hr:min		Torr
		hr:min		Torr

TITLE	BAKE OUT TEMPERATURE LOG
DATE:	6/22 - 6/25/97
TIME:	
TEST I.D.: e.g. WBSC1_1	WBSC 3
PSI TEST ENGINEER:	Sm 6/27/97
QUALITY ASSURANCE:	

BAKEOUT LOG / DATE	TIME		TEMPERATURE	
6/23/97	1454	hr:min	145.	°C
6/24/97	0815	hr:min	148.	°C
6/24/97	1145	hr:min	148	°C
6/25/97	0300	hr:min	65.	°C
6/25/97	0520	hr:min	55.	°C
6/25/97	0630	hr:min	50.	°C
		hr:min		°C
		hr:min		°C
		hr:min		°C
		hr:min		°C
		hr:min		°C
		hr:min		°C
		hr:min		°C
		hr:min		°C
		hr:min		°C
		hr:min		°C
		hr:min		°C
		hr:min		°C
		hr:min		°C
		hr:min		°C

.ITLE	OUTGASSING RATES REPORT SHEET
DATE:	6/22/97 - 6/25/97
TIME:	
TESTI.D.: e.g. WBSC1_1	WBSC3-2.5QC S/N 003
PSI TEST ENGINEER:	JM 6/27/97
QUALITY ASSURANCE:	

RGA NUMBER:	
RGA SENSOR HEAD SERIAL # QMS	
RGA ELECTRONICS UNIT SERIAL # QME	

WBSC3-2.5QC CYCLE 1 , CYCLE 4 (WITH LEAK)

AMU	I (Amp)	Leak rate Torr-L/s	F_{amu} Sensitivity Factor wrt N2	I with leak (Amp)	Gas load sensitivity Torr-L/s-A	Q Torr-L/s	q Torr-L/s-cm^2
H2	2.5E-8	4.8X10^{-6}		5.0E-8	192.	4.8E-6	8.9E-12
12	8.5E-11		0.42				
14	1.5E-10		0.5				
15	2.2E-10		0.54				
CH4	1.8E-10		0.57		1188.	1.6E-7	2.9E-13
17	3.1E-10		0.6				
H2O	1.2E-9		0.64		1188.	1.1E-6	2.0E-12
19	1.5E-10		0.67				
26	1.3E-10		0.71				
28	1.4E-9	9.5X10^{-7}		2.2E-9	1188.	1.7E-6	3.2E-12
32	3.6E-11		1.14				
38	1.0E-10		1.36				
40	2.7E-11	9.4X10^{-8}		1.0E-10	1288.	3.5E-8	
43	6.5E-11		1.53				
44	4.8E-10		1.57		1188.	7.1E-7	1.3E-12
129	<1.E-12	2.5X10^{-8}		1.7E-11	1563.		
131	1.E-12	2.0X10^{-8}		1.4E-11	1538.		
132	<1.E-12	2.5X10^{-8}		1.7E-11	1563.		
134	<1.E-12	1.0X10^{-8}		6.0E-12	2000		
OTHER	1.3E-9		1.0		1188.	1.5E-6	2.8E-12

A = 5.396E5 cm^2

ITLE	OUTGASSING RATES REPORT SHEET
DATE:	
TIME:	
TESTI.D.: e.g. WBSC1_1	
PSI TEST ENGINEER:	
QUALITY ASSURANCE:	

RGA NUMBER:	
RGA SENSOR HEAD SERIAL # QMS	
RGA ELECTRONICS UNIT SERIAL # QME	

AMU	I (Amp)	Leak rate Torr-L/s	F_{amu} Sensitivity Factor wrt N2	I with leak (Amp)	Gas load sensitivity Torr-L/s-A	Q Torr-L/s	q Torr-L/s-cm^2

TITLE	RGA ION SOURCE SETTINGS SHEET
DATE:	
TIME:	
TEST I.D.: e.g. WBSC1_1	
PSI TEST ENGINEER:	
QUALITY ASSURANCE:	

RGA NUMBER:	
RGA SENSOR HEAD SERIAL # QMS	
RGA ELECTRONICS UNIT SERIAL # QME	

Type	CH-TRON
Channel	0 ENABLE

IS-TYPE:	HS-THOR.

Detector	
Type	CH-TRON
SEM Volt.	<< >>

Amplifier	
Offset	ON

RF-Polarity	inverse
IS-Voltages	[V]
IonRef	138
Cathode	90.0
Focus	9.38
Field Axis	5.75
Extract	12

Mass	
Mode	SCAN-N
First	
Width	
Speed	
Resolution	
Threshold	

Ion Source	
Filament #	
IS-Set	

IS-Emission	
Emiss [mA]	
Protect [A]	3.5

Fil.Prot.	Thresh. [mbar]
ON below	
OFF above	

SPECIFICATION	
Number: V049-2-127 A	Rev.1

TITLE	RGA SCAN PARAMETER FILE SETTINGS
DATE:	
TIME:	
TESTI.D.: e.g. WBSC1_1	
PSI TEST ENGINEER:	
QUALITY ASSURANCE:	
RGA NUMBER:	
RGA SENSOR HEAD SERIAL # QMS	
RGA ELECTRONICS UNIT SERIAL # QME	

PARAMETER FILE: LIGO200.SAP

Load-Ch:00	CH-0	
State	ENABLE	
Det. Type	CH-TRON	
Mass Mode	SCAN-F	
First Mass	0.00	

Detector

EM Voltage	1700	

Mass

Speed	5 s	
Width	200	
Resolution	25	
Threshold	1E-15	

Amplifier

Amp. Mode	AUTO	
Amp. Range	—	
Range-L	—	
Pause - Cal.	1.0	
Offset	ON	

PARAMETER FILE: LIGO200.SBP

Load-Ch:00	CH-0	
State	ENABLE	
Det. Type	CH-TRON	
Mass Mode	SCAN-F	
First Mass	0.00	

SEM Voltage	1700	

Speed	5 s	
Width	200	
Resolution	25	

Amp. Mode	AUTO	
Amp. Range	—	
Range-L	—	
Pause - Cal.	1.0	
Offset	ON	

OUTPUT: User discretion
DISPLAY: User discretion

AGE: TEST I.D. FILENAME: XXXXXXXX.SAC

TITLE	RGA COMPUTER DATA FILE LOG
DATE:	
TIME:	
TEST I.D.: e.g. WBSC1_1	WBSC3
PSI TEST ENGINEER:	
QUALITY ASSURANCE:	

RGA NUMBER:	
RGA SENSOR HEAD SERIAL # QMS	
RGA ELECTRONICS UNIT SERIAL # QME	

BARGRAPH DATA FILE NAME

ANALOG SCAN DATA FILE NAME WBSC3_2.sac

OTHER DATA FILES

PRINTOUT OF

1. LAST ANALOG SCAN BEFORE CALIBRATION
2. ANALOG SCAN WITH CALIBRATED LEAK OPEN
3. BARGRAPH PLOT

[D1] Display Saved Values < wbsc3_2.sac >

File Display Setup Function Special Info

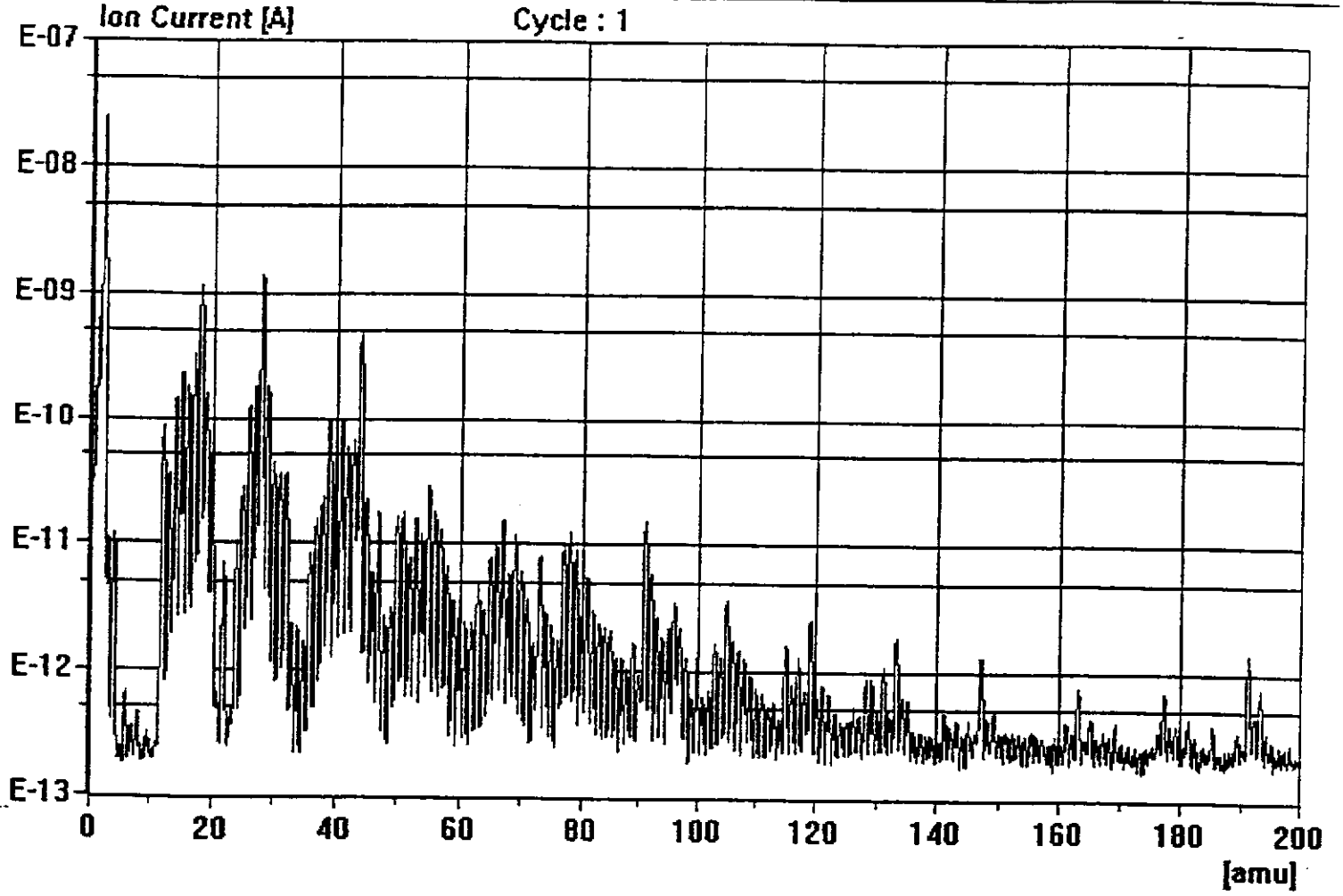

X: 188.06 Y: 1.737801E-10 C: 1

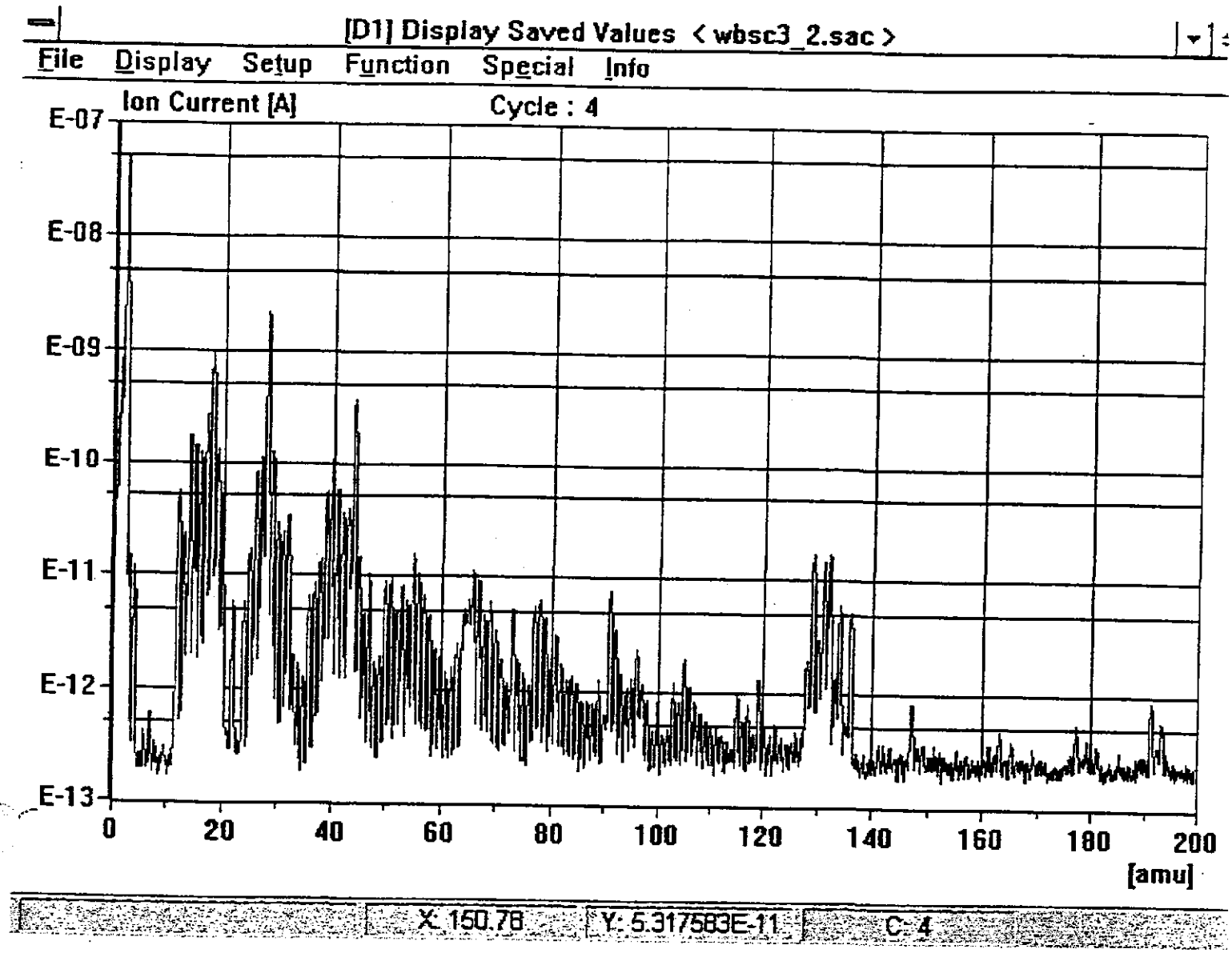
[D1] Display Saved Values < wbsc3_2.sac >
File Display Setup Function Special Info
Ion Current [A]
Cycle : 4
E-07
E-08
E-09
E-10
E-11
E-12
E-13
0 20 40 60 80 100 120 140 160 180 200
[amu]
X: 150.78
Y: 5.317583E-11
C: 4

RANOR, INC

NONCONFORMANCE REPORT

FORM QA 12.1 REV. 6 (07/30/96)

NCR NUMBER	PAGE ___ OF ___
NCR- 1013	SKETCH ATTACHED ☐

JOB NUMBER	CUSTOMER	PURCHASE ORDER NUMBER	QUANTITY
7300 Flm	PSI	555822-00	1

PART DESCRIPTION	DOCUMENT NUMBER AND REVISION	SERIAL NUMBER
BSC OVERALL ASSY LI 60 VAC	V049-4-101 REV-1	-03

CODE/SPECIFICATION: ☐ ASME SECTION III ☐ SAFETY RELATED ☐ ASME SECTION VIII ☐ MIL SPEC ☒ COMMERCIAL

DESCRIPTION OF NONCONFORMANCE

ITEM	REQUIREMENT	NONCONFORMANCE
1	96.875 ± 0.100 ZONE B-7	96.763, 96.762, -.012, -.013
2	48.44 ± .045 ZONE B-8	44.499, +.014
3	113.75 ± 0.10 ZONE C-C	113.577, -.073
4	// .030 B ZONE C-5	0.089 +.059
5	⊥ .030 C ZONE C-5	0.074 +.044
6	56.875 ± 0.10 ZONE C-5	56.762 -.013

REMARKS: SEE INSP LOG FOR DIMENSION LOCATION IN REF TO PRINT VIEW. LENGTH DIMENSIONS OUT OF SPEC ARE DERIVED FROM A MIN/MAX CONDITION

ROUTING SHEET IDENTIFIED WITH NCR NO. AND DATE OF ISSUE: BY JDB FOLDER DATE: 2-8-97

ORIGINATOR/INSPECTOR: [signature] DATE: 2-8-97

RESPONSIBILITY FOR NONCONFORMANCE

☐ VENDOR ☐ DESIGN ☐ MATERIAL ☐ CUTTING ☐ FORMING ☐ WELDING
☐ MACHINING ☐ INSPECTION ☐ CALIBRATION ☐ QC ☐ QA ☒ OTHER ____

TECHNICAL JUSTIFICATION/DESCRIPTION OF DISPOSITION

ITEM	TECHNICAL JUSTIFICATION	DESCRIPTION OF DISPOSITION
1-9	Submit to PSI for Tech Justification	
	a Written Disposition SB 2-10-97	
		USE AS IS

TECHNICAL JUSTIFICATION: BY [signature] DATE: 2-27-97

DISPOSITION: BY [signature] DATE: 2/27/97

DISPOSITION OF NONCONFORMANCE:	RECOMMENDED DISPOSITION:	10CFR21 EVALUATION REQUIRED: ☐ YES ☐ NO
☐ ACCEPT AS IS ☒ USE AS IS	☒ ACCEPTED	CORRECTIVE ACTION REQUIRED: ☐ YES ☐ NO
☐ REPAIR /REWORK ☐ REJECT	☐ NOT ACCEPTED	CUSTOMER APPROVAL REQUIRED: ☐ YES ☐ NO
CONDITIONAL RELEASE: CR NO. ____		APPROVED BY: DATE

APPROVAL OF DISPOSITION:		VERIFICATION OF DISPOSITION:	
VP-ENGINEERING	DATE	ACCEPTED BY	DATE
QA MANAGER	DATE	QA MANAGER	DATE
ANI	DATE	ANI	DATE

RANOR, INC

NONCONFORMANCE REPORT

FORM QA 12.1 REV. 6 (07/30/96)

NCR NUMBER	PAGE 2 OF 2
NCR- 1013	SKETCH ATTACHED ☐

DESCRIPTION OF NONCONFORMANCE

ITEM	REQUIREMENT	NONCONFORMANCE
7	⊥ | .030 | B | ZONE C-7	0.037 +.007
8	UPPER SHELL - FLAT FACE RING	FOUR SPOTS ON FACE RECEIVED
	*V049-4-041 33	MINOR DENTS LOCATED AT HOLES
		2, 14, 26 AND 38. AREAS REPAIRED
		PER STONING PER P.S.I. PHIL F.
9	UPPER SHELL - SIDE FLANGE FACE	5 SMALL DENTS LOCATED ON FACE
	32	CENTRAL TO HOLE PATTERN -
		AREAS REPAIRED OK. PER PHIL F.
		To be repaired by STONING 2-7-97
		Witnessed by Gene S 2-12-97

TECHNICAL JUSTIFICATION/DESCRIPTION OF DISPOSITION

ITEM	TECHNICAL JUSTIFICATION	DESCRIPTION OF DISPOSITION