NOTES: (UNLESS OTHERWISE SPECIFIED)

1. STEEL STAMP OR ENGRAVE THE DRAWING PART NUMBER ON NOTED FACE OF PART FOLLOWED BY "S/N", THEN A THREE DIGIT SERIAL NUMBER. SERIAL NUMBERS TO START AT 001 FOR FIRST PART AND PROCEED IN A CONSECUTIVE MANNER TO A MAXIMUM OF 999, FOR EACH SUCCEEDING PART PRODUCED. USE .013 HIGH CHARACTERS.
   EXAMPLE: D990038-A S/N 001
2. THIS IS A UHV APPLICATION AND ALL STOCK METAL SURFACES ARE TO BE CLEANED. NO MILL IDENT. MARKS OR FORMING DISCOLORATION IS PERMISSIBLE ON FINISHED PART. SCOTCH-BRITE, JITTERBUG, SKIN CUT, TUMBLING, OR CAUSTIC ETCH AND "DI" RINSE ARE ACCEPTABLE METHODS OF CLEANING. IN ADDITION, ELECTROPOLISH IS ACCEPTABLE FOR STAINLESS STEEL.

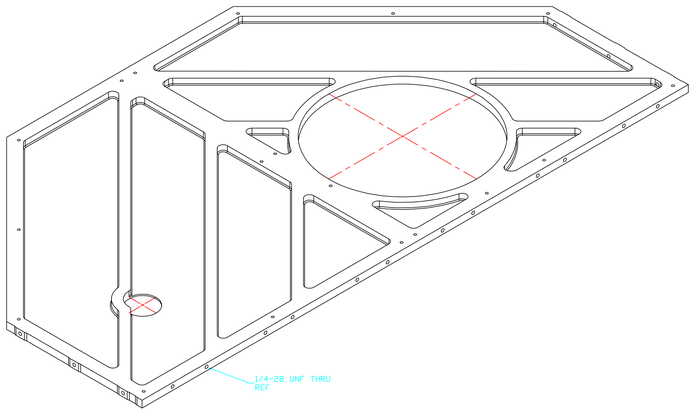

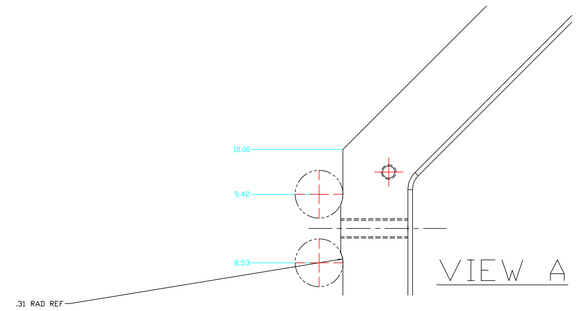

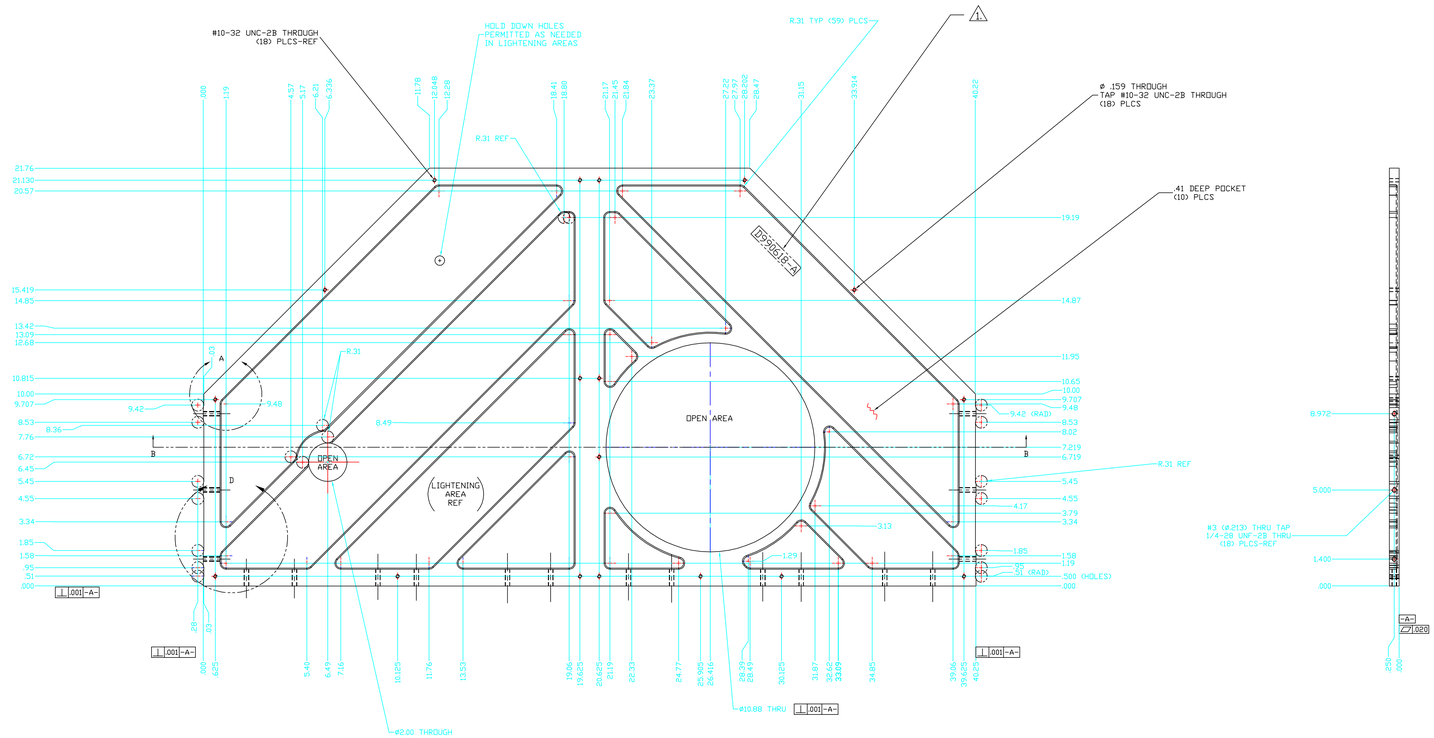

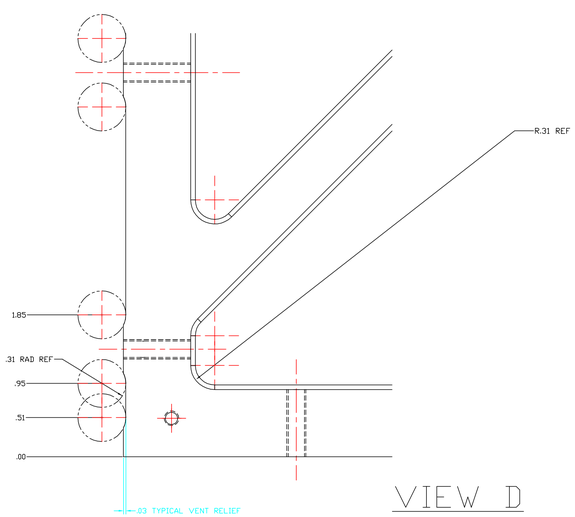

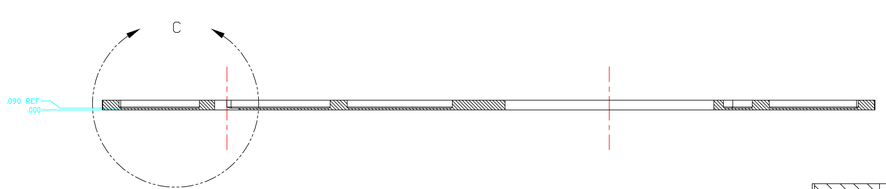

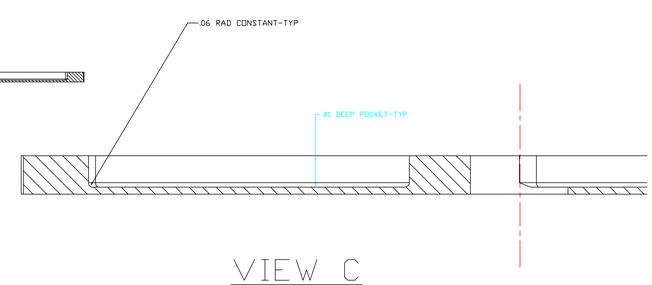

DWG. NO.	DESCRIPTION
REFERENCE DRAWINGS	

UNLESS OTHERWISE SPECIFIED
DIMENSIONS ARE IN INCHES

TOLERANCES:
FRACTIONAL ± 1/64
ANGULAR ± 1/2°
TWO PLACE DECIMAL ± .01
THREE PLACE DECIMAL ± .003

INSIDE RADII .06
FINISHED SURFACE RMS
BREAK CORNERS .005 TO .015
REMOVE ALL BURRS

MATERIAL: MAKE FROM .50 THICK CAST ALUMINUM TOOLING PLATE
HEAT TREAT:
FINISH: 1 2

USED ON:
NEXT ASS'Y: D990616

REV	DESCRIPTION	DCN NUMBER		APPR'D	CHECK	DRWN	DATE
A	RELEASE	E990390	–	–	–	KABOT	9-16-99
00	PRE-RELEASE	–	–	–	–	A. ROSA	9-15-99

ISSUE DESCRIPTION

LIGO CALIFORNIA INSTITUTE OF TECHNOLOGY
MASSACHUSETTS INSTITUTE OF TECHNOLOGY

I. O. BAFFLE,
4K,
UPPER SUPPORT

CAD FILE	SIZE	DWG. NO.
io_mirr4.dwg	E	D990618-A
SCALE NTS		SHEET 1 OF 1