NOTES: (UNLESS OTHERWISE SPECIFIED)

1. STEEL STAMP OR ENGRAVE THE DRAWING PART NUMBER ON NOTED FACE OF PART FOLLOWED BY "S/N", THEN A THREE DIGIT SERIAL NUMBER. SERIAL NUMBERS TO START AT 001 FOR FIRST PART AND PROCEED IN A CONSECUTIVE MANNER TO A MAXIMUM OF 999, FOR EACH SUCCEEDING PART PRODUCED. USE .013 HIGH CHARACTERS.
   EXAMPLE: D990038-A S/N 001
2. THIS IS A UHV APPLICATION AND ALL STOCK METAL SURFACES ARE TO BE CLEANED. NO MILL IDENT. MARKS OR FORMING DISCOLORATION IS PERMISSIBLE ON FINISHED PART. SCOTCH-BRITE, JITTERBUG, SKIN CUT, TUMBLING, OR CAUSTIC ETCH AND "DI" RINSE ARE ACCEPTABLE METHODS OF CLEANING. IN ADDITION, ELECTROPOLISH IS ACCEPTABLE FOR STAINLESS STEEL.

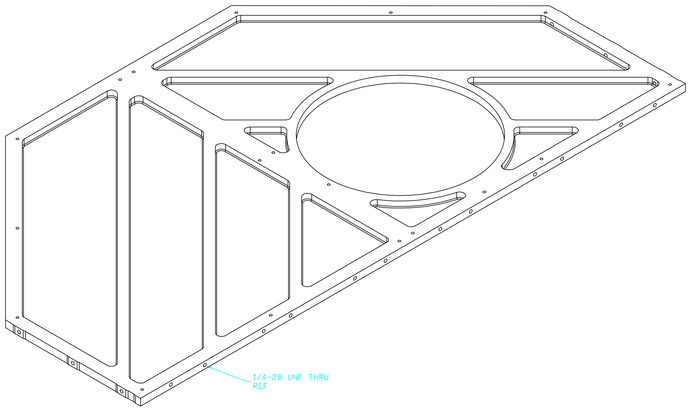

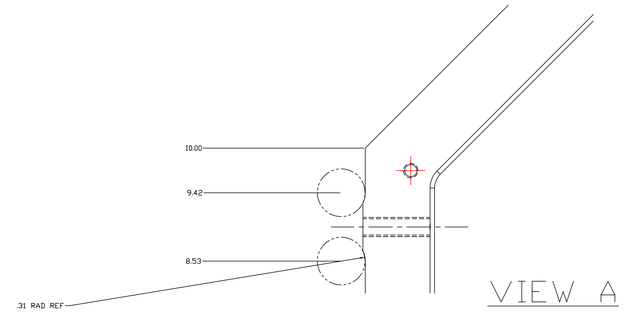

VIEW A

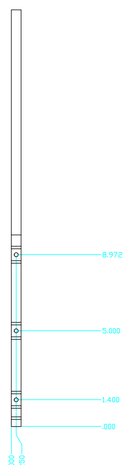

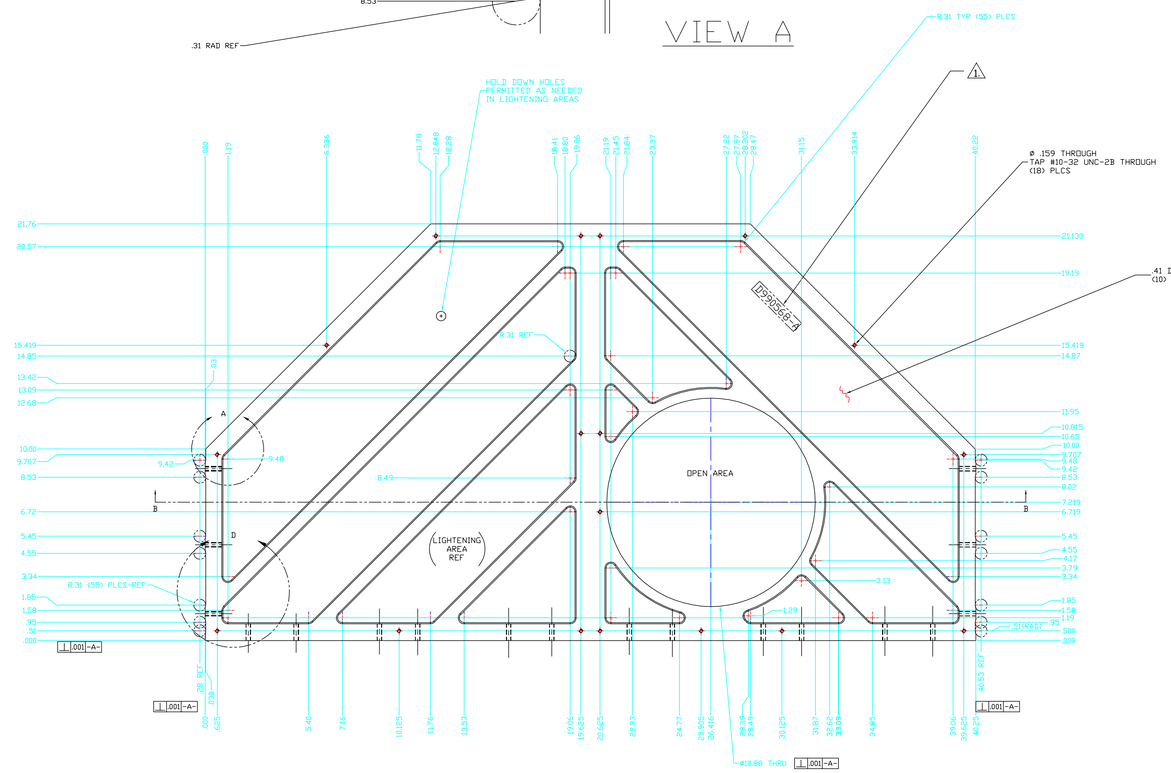

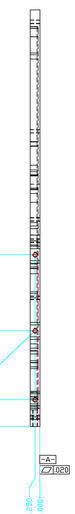

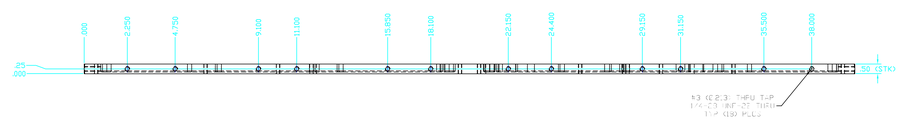

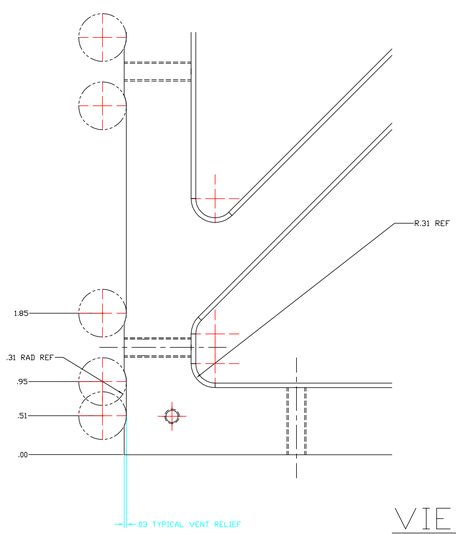

VIEW D

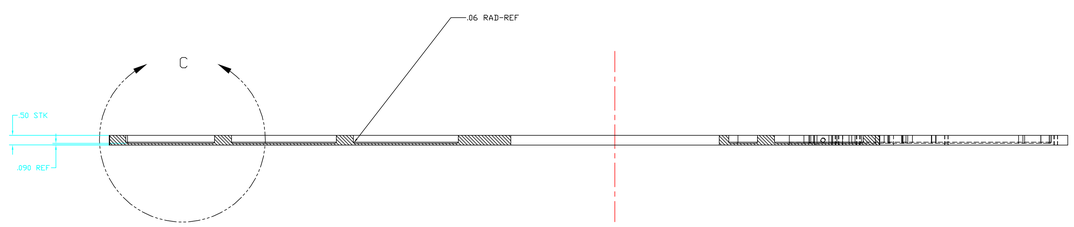

SECTION B-B

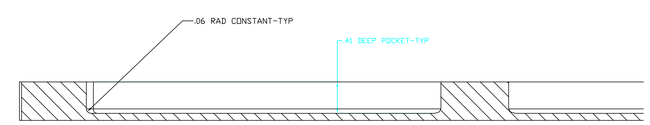

VIEW C

UNLESS OTHERWISE SPECIFIED
DIMENSIONS ARE IN INCHES

TOLERANCES:
FRACTIONAL ± 1/64
ANGULAR ± 1/2°
TWO PLACE DECIMAL ± .01
THREE PLACE DECIMAL ± .003

INSIDE RADII .06
FINISHED SURFACE RMS
BREAK CORNERS .005 TO .015
REMOVE ALL BURRS

MATERIAL: MAKE FROM .50 THICK CAST ALUMINUM TOOLING PLATE
HEAT TREAT:
FINISH: 1. 2.

USED ON:
NEXT ASS'Y: D990597

DWG. NO.	DESCRIPTION
REFERENCE DRAWINGS	

REV	DESCRIPTION	DCN NUMBER		APPR'D	CHECK	DRWN	DATE
A	RELEASE	E990036	–	–	–	KABOT	3-10-99
00	PRE-RELEASE	–	–	–	–	A. ROSA	12-19-98

ISSUE DESCRIPTION

LIGO CALIFORNIA INSTITUTE OF TECHNOLOGY
MASSACHUSETTS INSTITUTE OF TECHNOLOGY

I. O. BAFFLE,
2K,
UPPER SUPPORT

CAD FILE io_mirr3.dwg
SIZE E
DWG. NO. D990568-A
SCALE NTS
SHEET 1 OF 1