NOTES: (UNLESS OTHERWISE SPECIFIED)

1. STEEL STAMP OR ENGRAVE THE DRAWING PART NUMBER ON NOTED FACE OF PART FOLLOWED BY "S/N", THEN A THREE DIGIT SERIAL NUMBER. SERIAL NUMBERS TO START AT 001 FOR FIRST PART AND PROCEED IN A CONSECUTIVE MANNER TO A MAXIMUM OF 999, FOR EACH SUCCEEDING PART PRODUCED. USE 0.13 HIGH CHARACTERS.
   EXAMPLE: D990038-A S/N 001
2. THIS IS A UHV APPLICATION AND ALL STOCK METAL SURFACES ARE TO BE CLEANED. NO MILL IDENT. MARKS OR FORMING DISCOLORATION IS PERMISSIBLE ON FINISHED PART. SCOTCH-BRITE, JITTERBUG, SKIN CUT, TUMBLING, OR CAUSTIC ETCH AND "DI" RINSE ARE ACCEPTABLE METHODS OF CLEANING. IN ADDITION, ELECTROPOLISH IS ACCEPTABLE FOR STAINLESS STEEL.

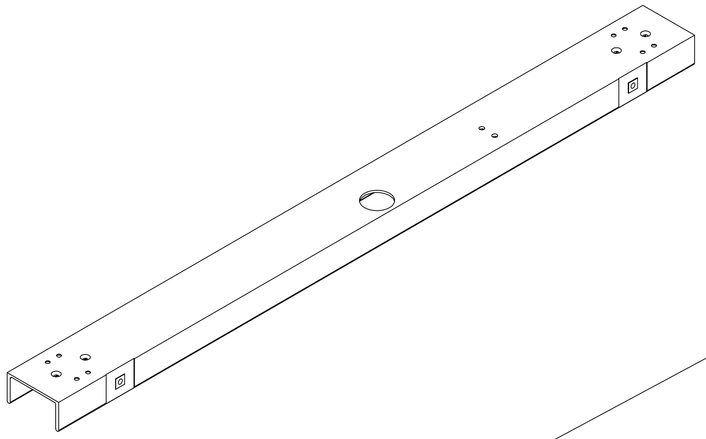

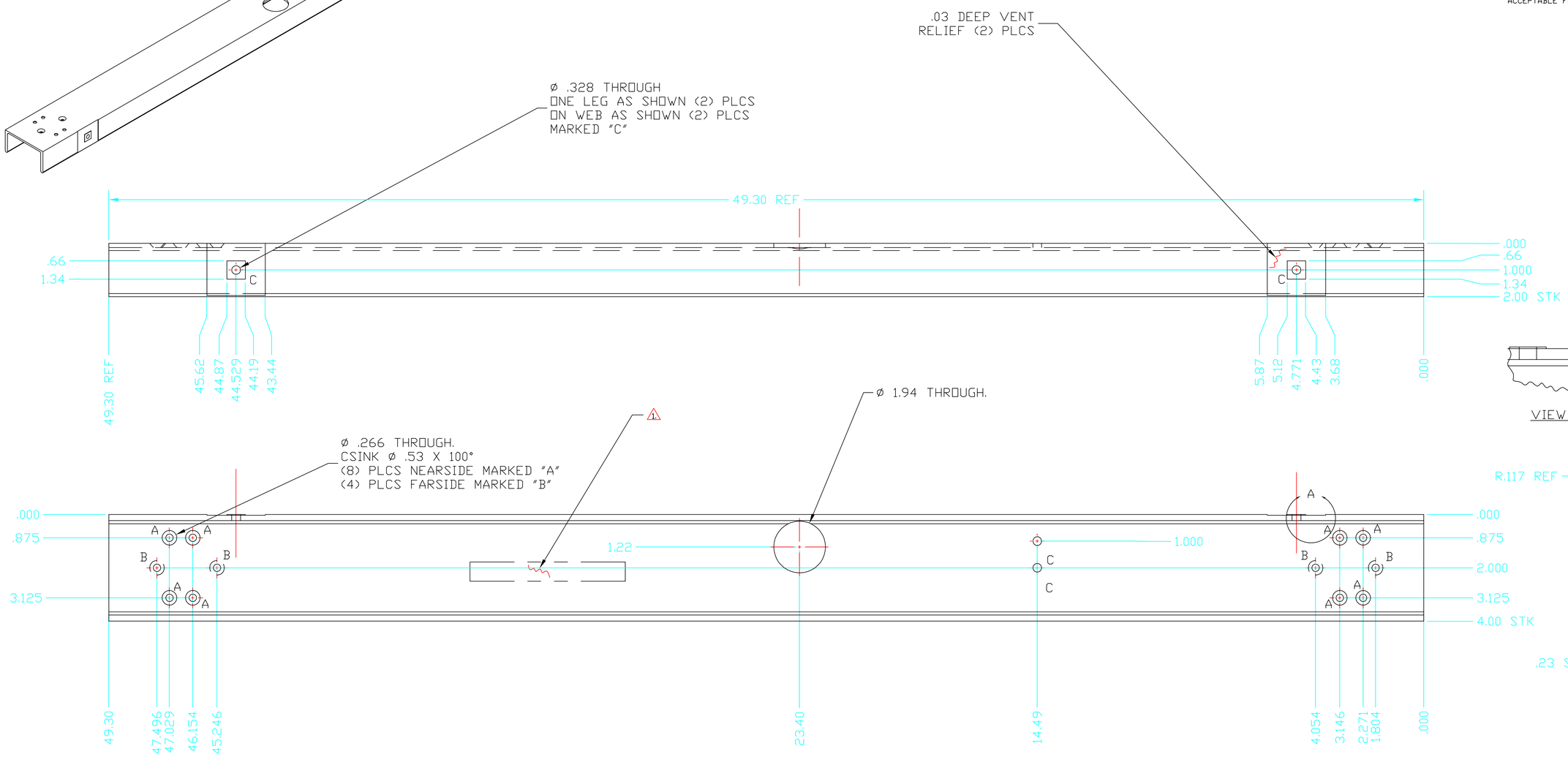

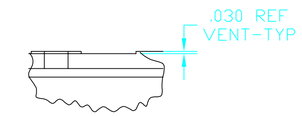

VIEW A

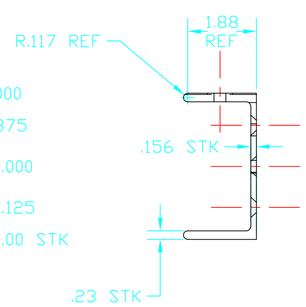

UNLESS OTHERWISE SPECIFIED
DIMENSIONS ARE IN INCHES

TOLERANCES:
FRACTIONAL ± 1/64
ANGULAR ± 1/2°
TWO PLACE DECIMAL ±.01
THREE PLACE DECIMAL ±.003

INSIDE RADII .06
FINISHED SURFACE RMS
BREAK OUTSIDE CORNERS .005 - .015
REMOVE ALL BURRS

MATERIAL: TYPE 6061-T6 ALUMINUM CHANNEL
ALUM. ASSOC. SIZE:4x2x.15x.23
HEAT TREAT:
FINISH: 1. 2.
USED ON:
NEXT ASS'Y: D990492

DWG. NO.	DESCRIPTION
REFERENCE DRAWINGS	

REV	DESCRIPTION	DCN NUMBER		APPR'D	CHECK	DRWN	DATE
B	RELEASE	E990305	-	-	-	KABOT	10-21-99
A	PRE-RELEASE	-	-	-	-	KABOT	10-5-99

ISSUE DESCRIPTION

LIGO CALIFORNIA INSTITUTE OF TECHNOLOGY
MASSACHUSETTS INSTITUTE OF TECHNOLOGY

ARM CAVITY BAFFLE,
OUTER SUPPORT,
LEVER CLEARANCE HOLE,
ETM RAIL

CAD FILE	SIZE	DWG. NO.
partle.dwg	D	D990527-B
SCALE NTS		SHEET 1 OF 1