NOTES: (UNLESS OTHERWISE SPECIFIED)

1. STEEL STAMP OR ENGRAVE THE DRAWING PART NUMBER ON NOTED FACE OF PART FOLLOWED BY "S/N", THEN A THREE DIGIT SERIAL NUMBER. SERIAL NUMBERS TO START AT 001 FOR FIRST PART AND PROCEED IN A CONSECUTIVE MANNER TO A MAXIMUM OF 999, FOR EACH SUCCEEDING PART PRODUCED. USE .013 HIGH CHARACTERS.
   EXAMPLE: D990038-A S/N 001

2. THIS IS A UHV APPLICATION AND ALL STOCK METAL SURFACES ARE TO BE CLEANED. NO MILL IDENT. MARKS OR FORMING DISCOLORATION IS PERMISSIBLE ON FINISHED PART. SCOTCH-BRITE, JITTERBUG, SKIN CUT, TUMBLING, OR CAUSTIC ETCH AND "DI" RINSE ARE ACCEPTABLE METHODS OF CLEANING. IN ADDITION, ELECTROPOLISH IS ACCEPTABLE FOR STAINLESS STEEL.

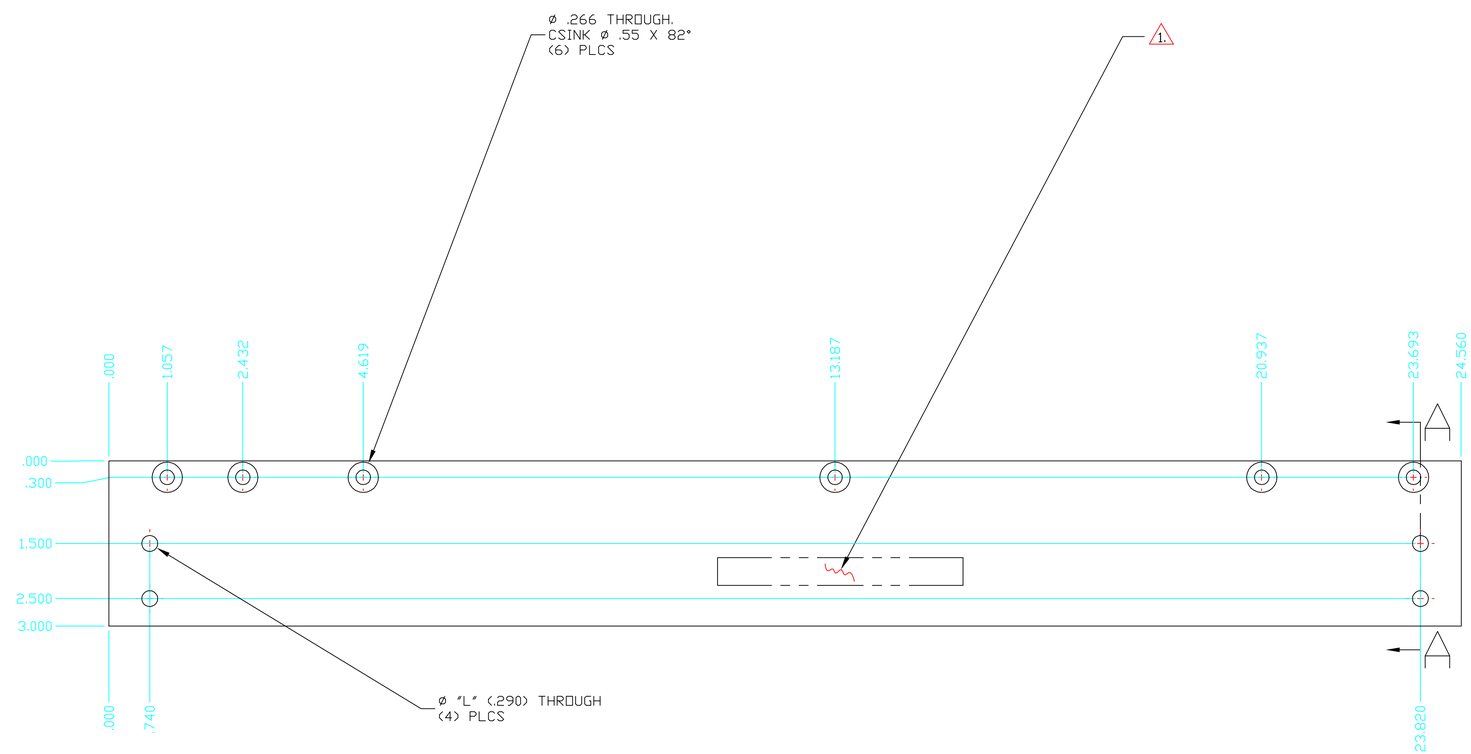

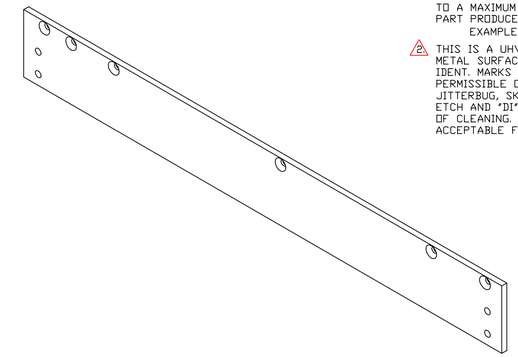

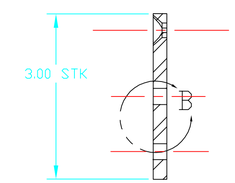

SECTION A-A

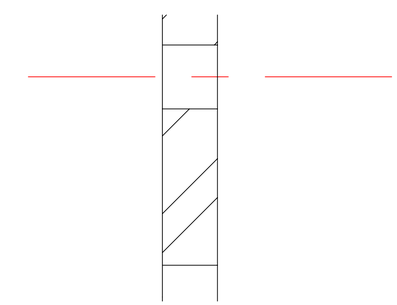

VIEW B

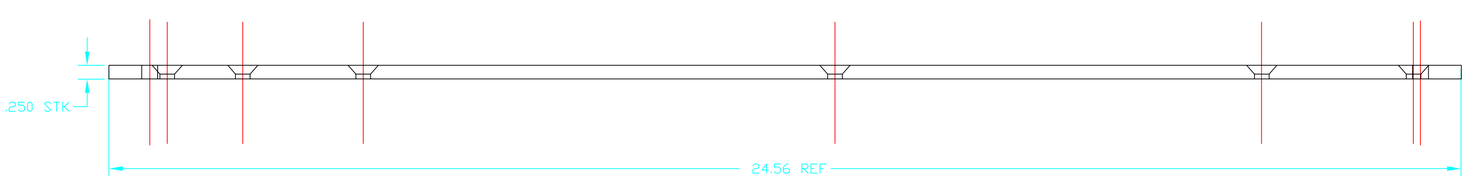

UNLESS OTHERWISE SPECIFIED
DIMENSIONS ARE IN INCHES (mm)

TOLERANCES:
FRACTIONAL ± 1/64
ANGULAR ± 1/2°
TWO PLACE DECIMAL ±.01
THREE PLACE DECIMAL ±.003

INSIDE RADII .06
FINISHED SURFACE RMS
BREAK OUTSIDE CORNERS .005 - .015
REMOVE ALL BURRS

MATERIAL: TYPE 6061-T6 ALUMINUM BAR 1/4 X 3

HEAT TREAT:

FINISH: 1. 2.

USED ON:

NEXT ASS'Y: D990341, D990350

DWG. NO.	DESCRIPTION
REFERENCE DRAWINGS	

REV	DESCRIPTION	DCN NUMBER		APPR'D	CHECK	DRWN	DATE
A	RELEASE	E990232	-	-	-	KABOT	7-1-99

ISSUE DESCRIPTION

LIGO CALIFORNIA INSTITUTE OF TECHNOLOGY
MASSACHUSETTS INSTITUTE OF TECHNOLOGY

ARM CAVITY BAFFLE,
GLASS SUPPORT,
VERTICAL EDGE STRIP,
RIGHT END

CAD FILE: BOR_PLT1.dwg
SIZE: D
DWG. NO.: D990366-A
SCALE: NTS
SHEET: 1 OF 1