NOTES: (UNLESS OTHERWISE SPECIFIED)

1. STEEL STAMP OR ENGRAVE THE DRAWING PART NUMBER ON NOTED FACE OF PART FOLLOWED BY "S/N", THEN A THREE DIGIT SERIAL NUMBER. SERIAL NUMBERS TO START AT 001 FOR FIRST PART AND PROCEED IN A CONSECUTIVE MANNER TO A MAXIMUM OF 999. FOR EACH SUCCEEDING PART PRODUCED. USE .013 HIGH CHARACTERS.
   EXAMPLE: D990038-A S/N 001
2. THIS IS A UHV APPLICATION AND ALL STOCK METAL SURFACES ARE TO BE CLEANED. NO MILL IDENT. MARKS OR FORMING DISCOLORATION IS PERMISSIBLE ON FINISHED PART. SCOTCH-BRITE, JITTERBUG, SKIN CUT, TUMBLING, OR CAUSTIC ETCH AND "DI" RINSE ARE ACCEPTABLE METHODS OF CLEANING. IN ADDITION, ELECTROPOLISH IS ACCEPTABLE FOR STAINLESS STEEL.

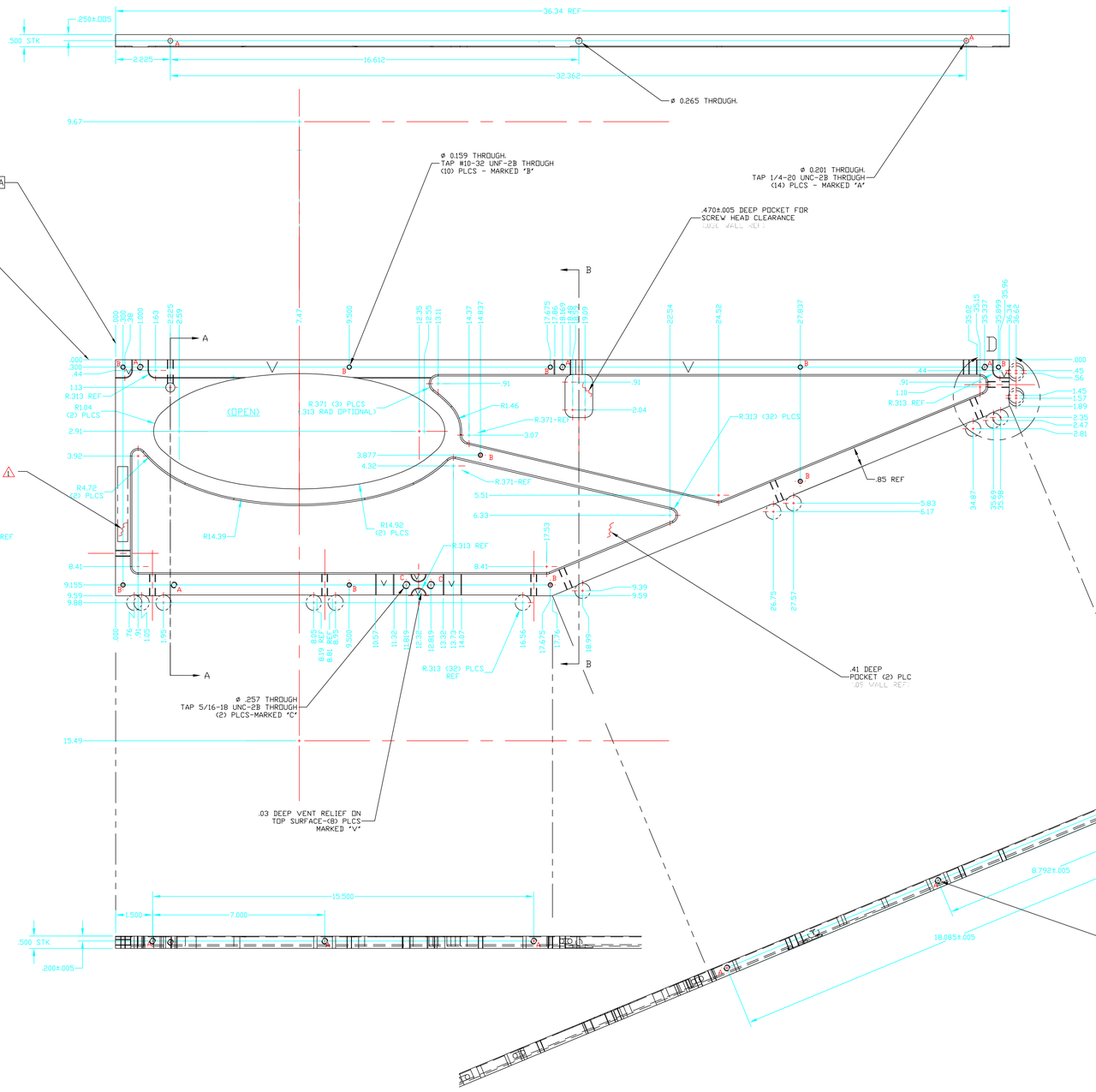

SECTION A-A

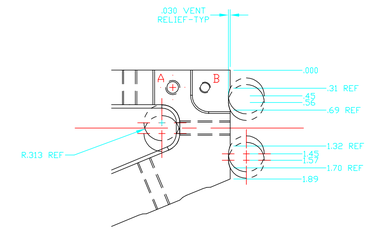

VIEW D

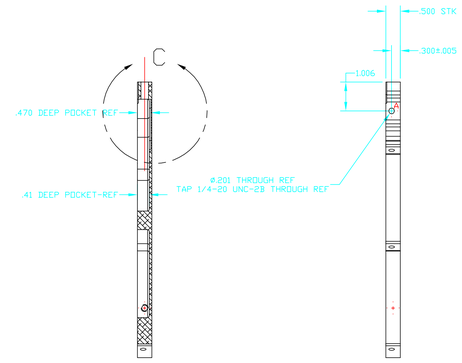

SECTION B-B

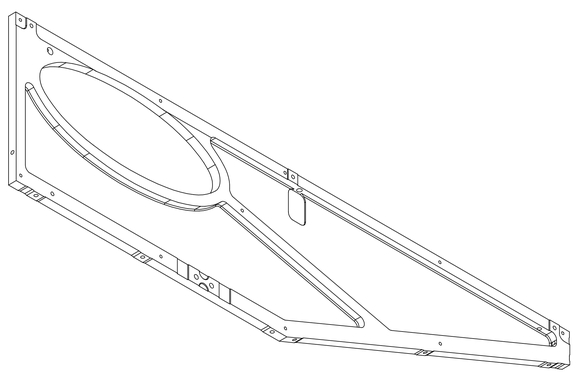

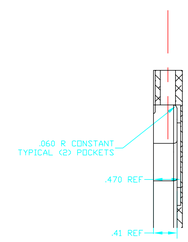

VIEW C

DWG. NO.	DESCRIPTION
REFERENCE DRAWINGS	

UNLESS OTHERWISE SPECIFIED
DIMENSIONS ARE IN INCHES (mm)

TOLERANCES:
FRACTIONAL ± 1/64
ANGULAR ± 1/2°
TWO PLACE DECIMAL ±.01
THREE PLACE DECIMAL ±.003

INSIDE RADII .060
FINISHED SURFACE RMS
BREAK OUTSIDE CORNERS .005 - .015
REMOVE ALL BURRS

MATERIAL: .500 THICK ALUMINUM CAST TOOLING PLATE
HEAT TREAT:
FINISH: 1. 2.
USED ON:
NEXT ASS'Y: D990341, D990350

REV	DESCRIPTION	DCN NUMBER	-	APPR'D	CHECK	DRWN	DATE
A	RELEASE	E990232	-	-	-	KABOT	6-7-99

ISSUE DESCRIPTION

LIGO CALIFORNIA INSTITUTE OF TECHNOLOGY
MASSACHUSETTS INSTITUTE OF TECHNOLOGY

ARM CAVITY BAFFLE,
GLASS SUPPORT,
BOTTOM RIGHT PLATE

CAD FILE: brn.dwg
SIZE: E
DWG. NO. D990356-A
SCALE: NTS
SHEET 1 OF 1