NOTES: (UNLESS OTHERWISE SPECIFIED)

1. CUTTING FLUIDS TO BE WATER SOLUBLE AND FREE OF SULFUR, CHLORINE, & SILICONE.
2. STEEL STAMP OR ENGRAVE THE DRAWING PART NUMBER ON NOTED FACE OF PART FOLLOWED BY "S/N", THEN A THREE DIGIT SERIAL NUMBER. SERIAL NUMBERS TO START AT 001 FOR FIRST PART AND PROCEED IN A CONSECUTIVE MANNER TO A MAXIMUM OF 999, FOR EACH SUCCEEDING PART PRODUCED. USE 0.13 HIGH CHARACTERS.
   EXAMPLE: D990038-A S/N 001

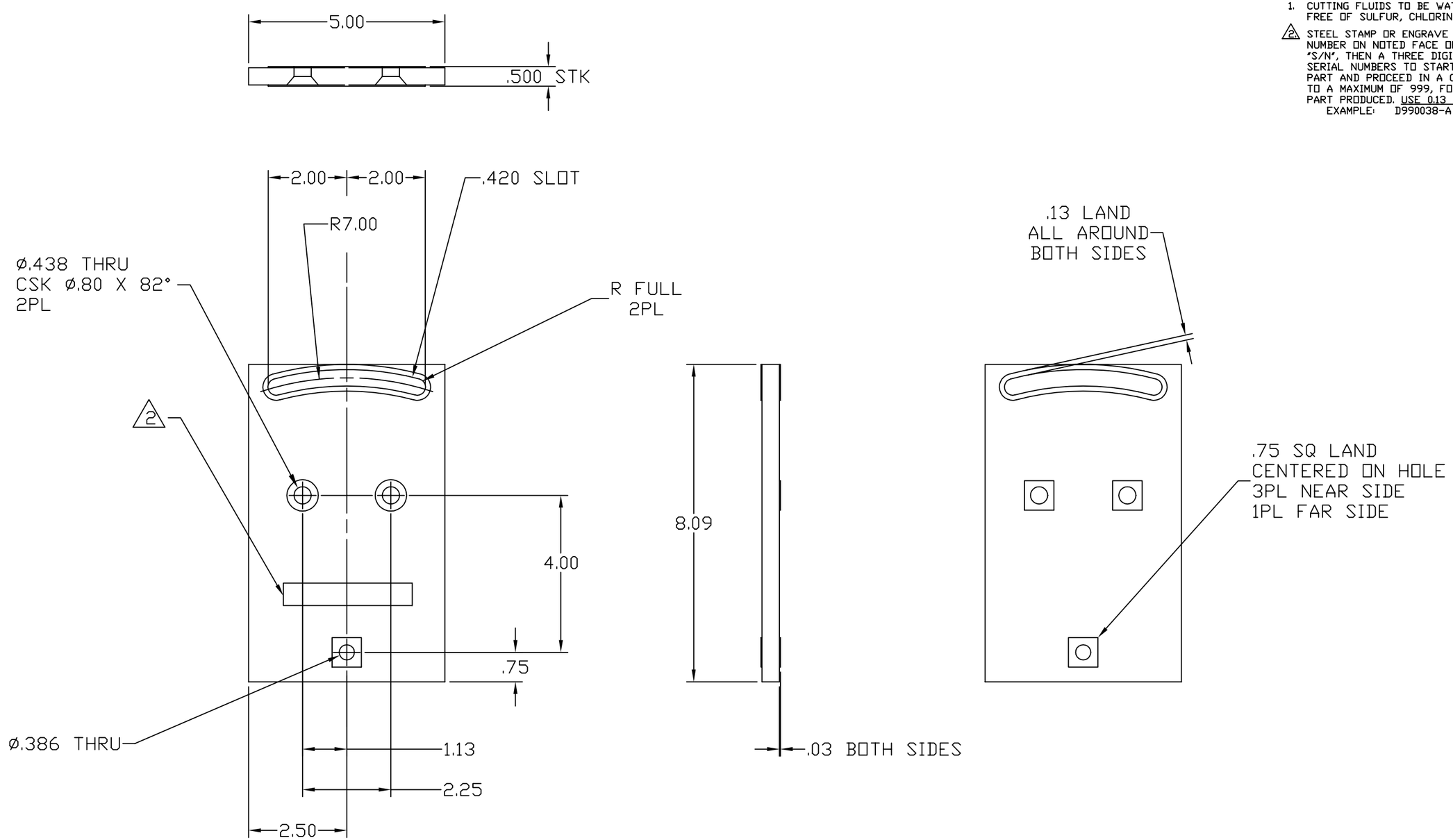

UNLESS OTHERWISE SPECIFIED
DIMENSIONS ARE IN INCHES

TOLERANCES:
FRACTIONAL ±
ANGULAR ±
ANGULARMACH ± BEND ±
TWO PLACE DECIMAL ±.01

THREE PLACE DECIMAL ±.005
FINISHED SURFACE RMS
BREAK CORNERS IN: OUT: .005-.010
REMOVE ALL BURRS

MATERIAL: 6061-T6 ALU PLATE .500" THICK
HEAT TREAT:
FINISH:

DWG. NO.	DESCRIPTION
REFERENCE DRAWINGS	

USED ON:
NEXT ASS'Y: D990141

REV	DESCRIPTION	APPR'D	CHECK	DRWN	DATE
C	DCN E990209			Conley	5-13-99
B	DCN E990205			Conley	5-6-99
A	DCN E990108			Conley	3-16-99

ISSUE DESCRIPTION

LIGO CALIFORNIA INSTITUTE OF TECHNOLOGY
MASSACHUSETTS INSTITUTE OF TECHNOLOGY

CAVITY BEAM DUMP
HOUSING PLATE

CAD FILE	SIZE	DWG. NO.
D990140-C.dwg	B	D990140-C
SCALE NTS		SHEET 1 OF 1