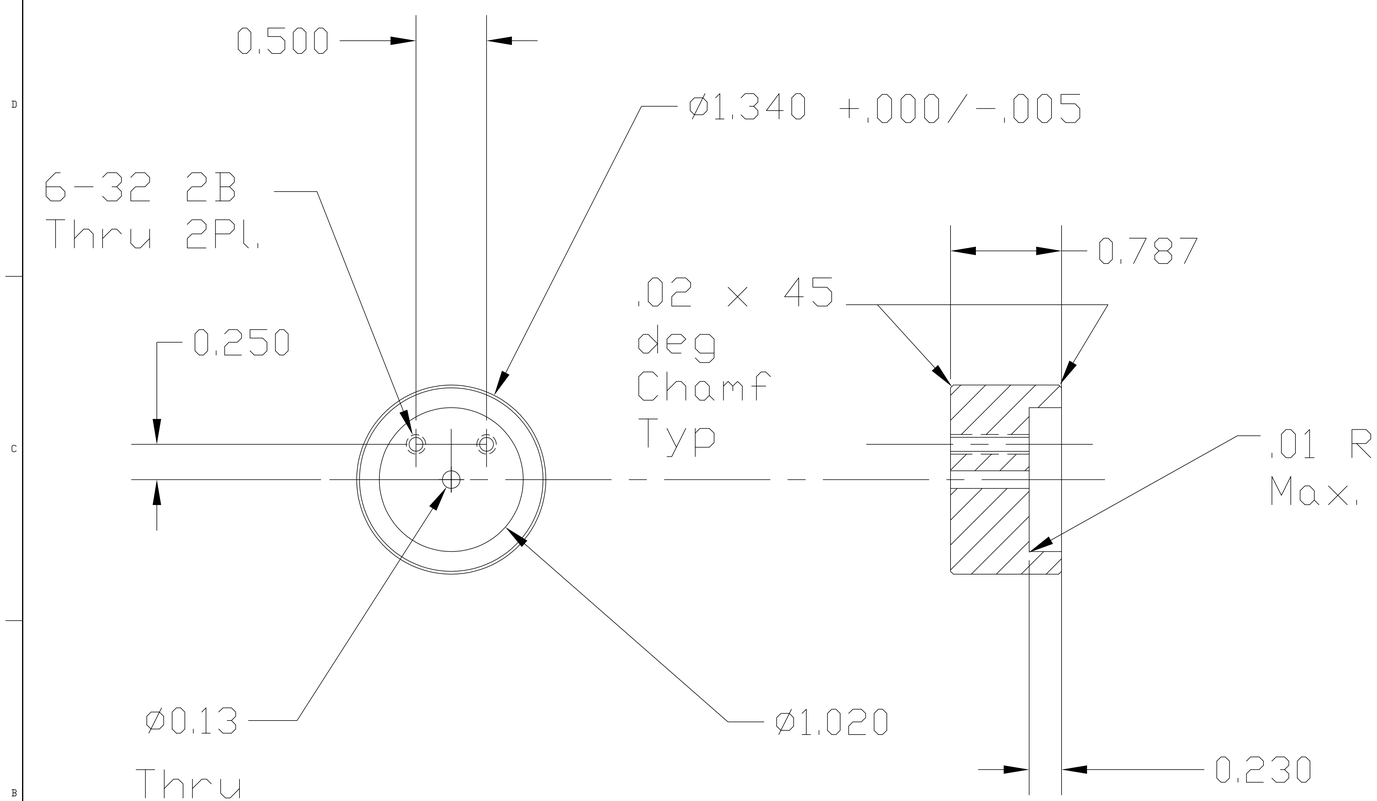

NOTES: (UNLESS OTHERWISE SPECIFIED)

Liquid contaminants/Machining Lubricants
Liquids containing hydrocarbons or other contaminants, other than the machining fluids specified herein, shall not be allowed to come into contact with suspension material at any time. All machining fluids shall be water soluble and free of sulfur, chlorine and silicone; such as Cincinnati Milacron's Cimtech 410 (stainless steel).

Identification_Serial Number
A serial number shall be etched, or scribed on the part see note drawing note.
Serial Number Format
The Serial number shall be of the format:
D99xxxx-x- *001*

Example: D990021-A-001
The drawing number, The revision number,
The sequential part number

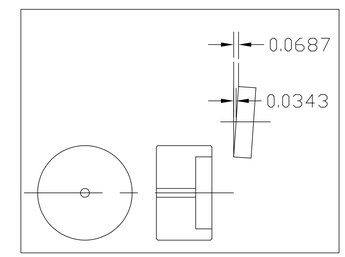

ref. make 1 per assembly

REF.	QTY.	PART or DRWG No.	NOMENCLATURE or DESCRIPTION	MATERIAL

PARTS and MATERIAL LIST

DWG. NO.	DESCRIPTION
REFERENCE DRAWINGS	

UNLESS OTHERWISE SPECIFIED
DIMENSIONS ARE IN INCHES

TOLERANCES:
FRACTIONAL ±
ANGULAR ±
ANGULARMACH ± BEND ±
TWO PLACE DECIMAL ± .01
THREE PLACE DECIMAL ± .005
FINISHED SURFACE RMS
BREAK CORNERS IN: OUT:
REMOVE ALL BURRS

MATERIAL: 6061 T-6 ALUM.
HEAT TREAT: /
FINISH: /

USED ON: XXX
NEXT ASS'Y: XXX

REV	DESCRIPTION	DCN NUMBER		APPR'D	CHECK	DRWN	DATE
A	FOR FABRICATION	LIGO-E000543-00-D				kenn	6-8-99
00	PRE-RELEASE	-	-			kenn	5-3-99

ISSUE DESCRIPTION

LIGO CALIFORNIA INSTITUTE OF TECHNOLOGY
MASSACHUSETTS INSTITUTE OF TECHNOLOGY

SECONDARY
MIRROR BLANK HOLDER

CAD FILE: D990109-A
SIZE: B
DWG. NO.: D990109-A
SCALE: 1 : 1
SHEET: 1 OF 1