NOTES:

1. CLEAR ANODIZE PER MIL-A-8625
2. ABRASIVE CLEAN INNER AND OUTER SURFACES

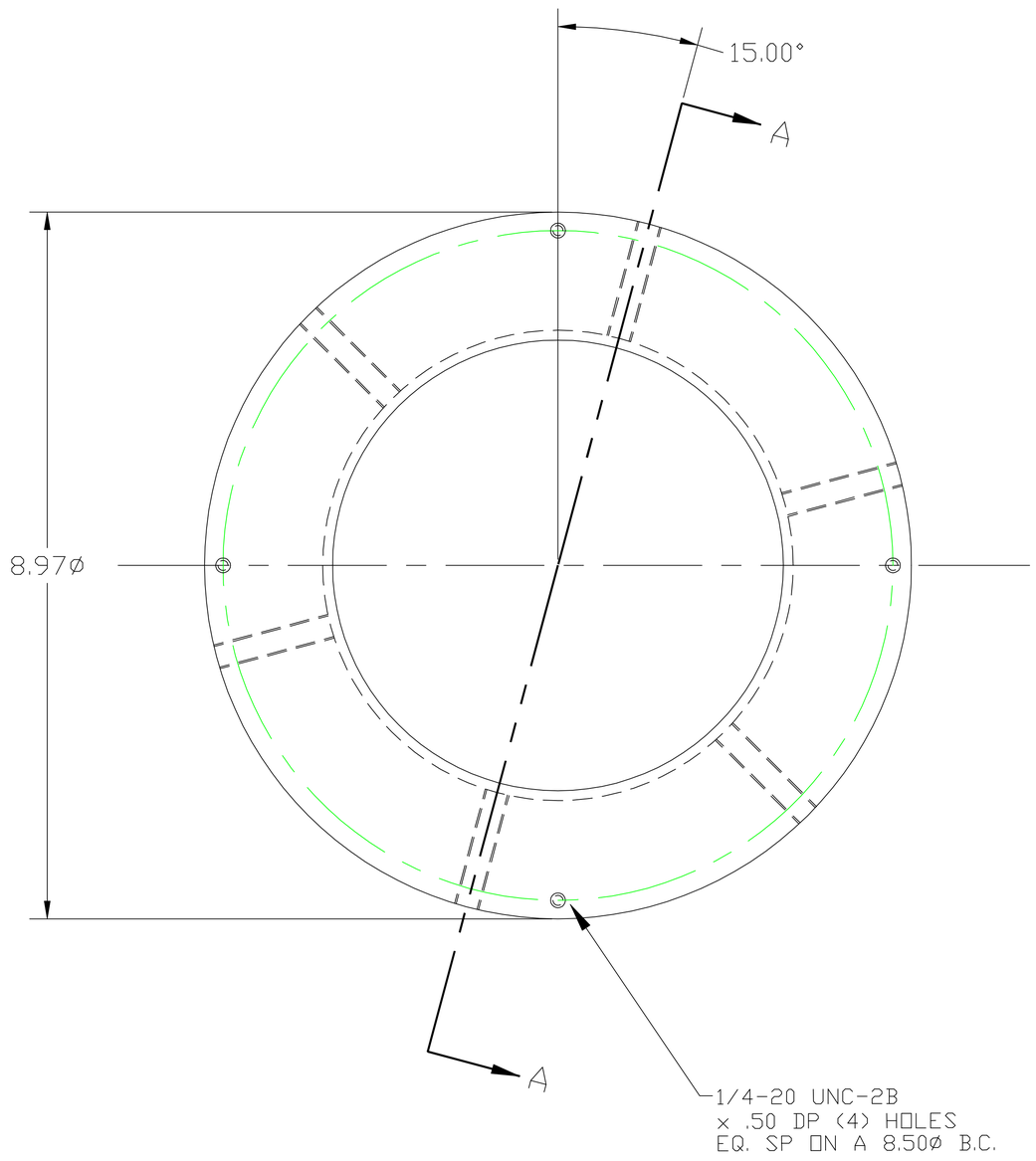

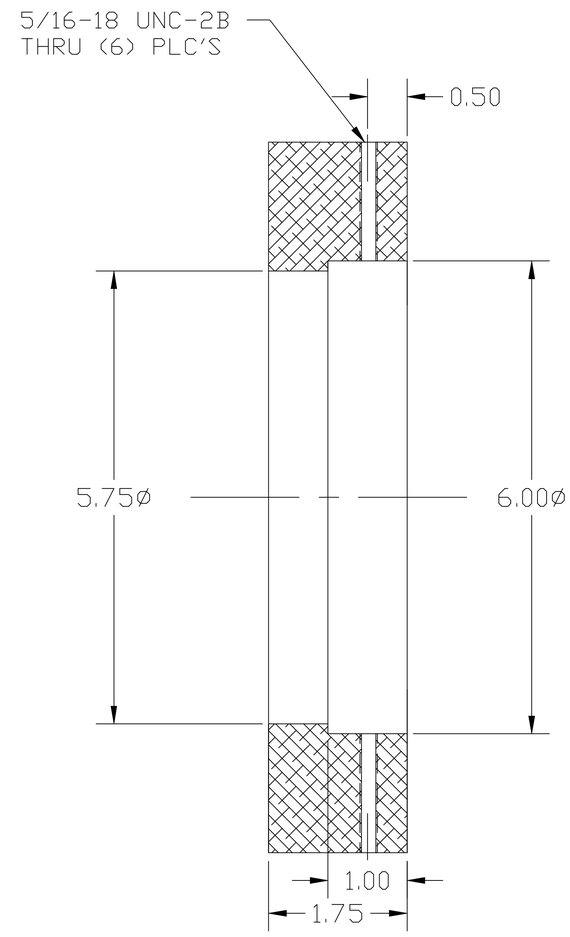

SECTION A-A

DWG. NO.	DESCRIPTION
REFERENCE DRAWINGS	

UNLESS OTHERWISE SPECIFIED
DIMENSIONS ARE IN INCHES

TOLERANCES:
FRACTIONAL ± 1/16(.16)
ANGULAR ± 1°
TWO PLACE DECIMAL ± .01(.025)
THREE PLACE DECIMAL ± .005(.013)

FINISHED SURFACE RMS 63
BREAK CORNERS IN: OUT: .02
REMOVE ALL BURRS

MATERIAL:	HEAT TREAT:	FINISH:
6061-T6 ALUM	NONE	–

USED ON: – NEXT ASS'Y: –

REV	DESCRIPTION	DCC	SYS	DET	CDS	VE	CC	BT	CHECK	DRWN	DATE
A	INITIAL RELEASE									MASON	5/98
00	PRE-RELEASE									K.MASON	2/99

ISSUE DESCRIPTION

LIGO
CALIFORNIA INSTITUTE OF TECHNOLOGY
MASSACHUSETTS INSTITUTE OF TECHNOLOGY

VIEWPORT MOUNT
BSC-8
OPTICAL LEVER ASSEMBLY
ASC ALIGNMENT

CAD FILE	SIZE	DWG. NO.
D990036-A.dwg	D	D990036-A-D
SCALE FULL		SHEET 1 of 1