NOTES: (UNLESS OTHERWISE SPECIFIED)

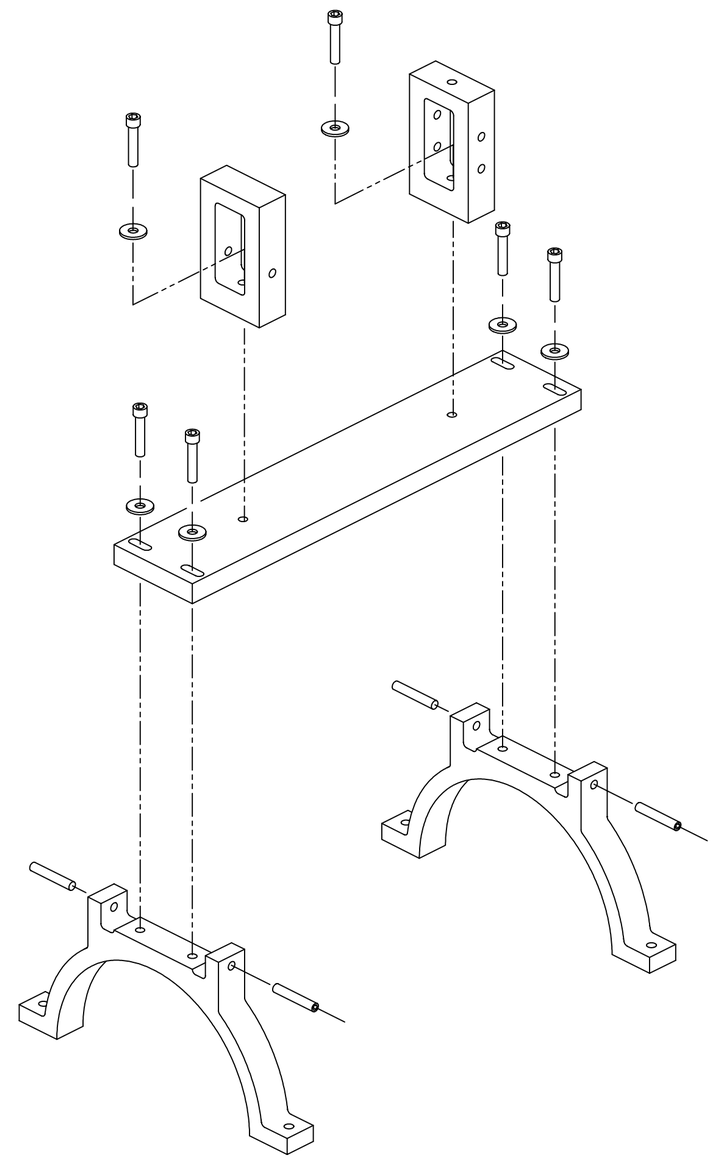

SEE ASSEMBLY D990053
FOR PART NUMBERS

REF	QTY	PART or DRWG No.	DESCRIPTION	MATERIAL

PARTS and MATERIAL LIST

DWG. NO.	DESCRIPTION
XXX	XXX

REFERENCE DRAWINGS

UNLESS OTHERWISE SPECIFIED
DIMENSIONS ARE IN INCHES

TOLERANCES:
FRACTIONAL ±
ANGULAR ±
ANGULARMACH ± BEND ±
TWO PLACE DECIMAL ±
THREE PLACE DECIMAL ±
FINISHED SURFACE RMS
BREAK CORNERS IN: OUT:
REMOVE ALL BURRS

MATERIAL: | HEAT TREAT: | FINISH:

USED ON: XXX | NEXT ASS'Y: XXX

REV	DESCRIPTION	DCN NUMBER		APPR'D	CHECK	DRWN	DATE
A	FAB-RELEASE					KENM	10-11-00
00	PRE-RELEASE	-	-	-	-	CHAPUT	1-27-99

ISSUE DESCRIPTION

LIGO CALIFORNIA INSTITUTE OF TECHNOLOGY
MASSACHUSETTS INSTITUTE OF TECHNOLOGY

ASSEMBLY,
ETM CRADLE

CAD FILE	SIZE	DWG. NO.
D980652-A	D	D980652-A
SCALE 1 : 1		SHEET 1 OF 1