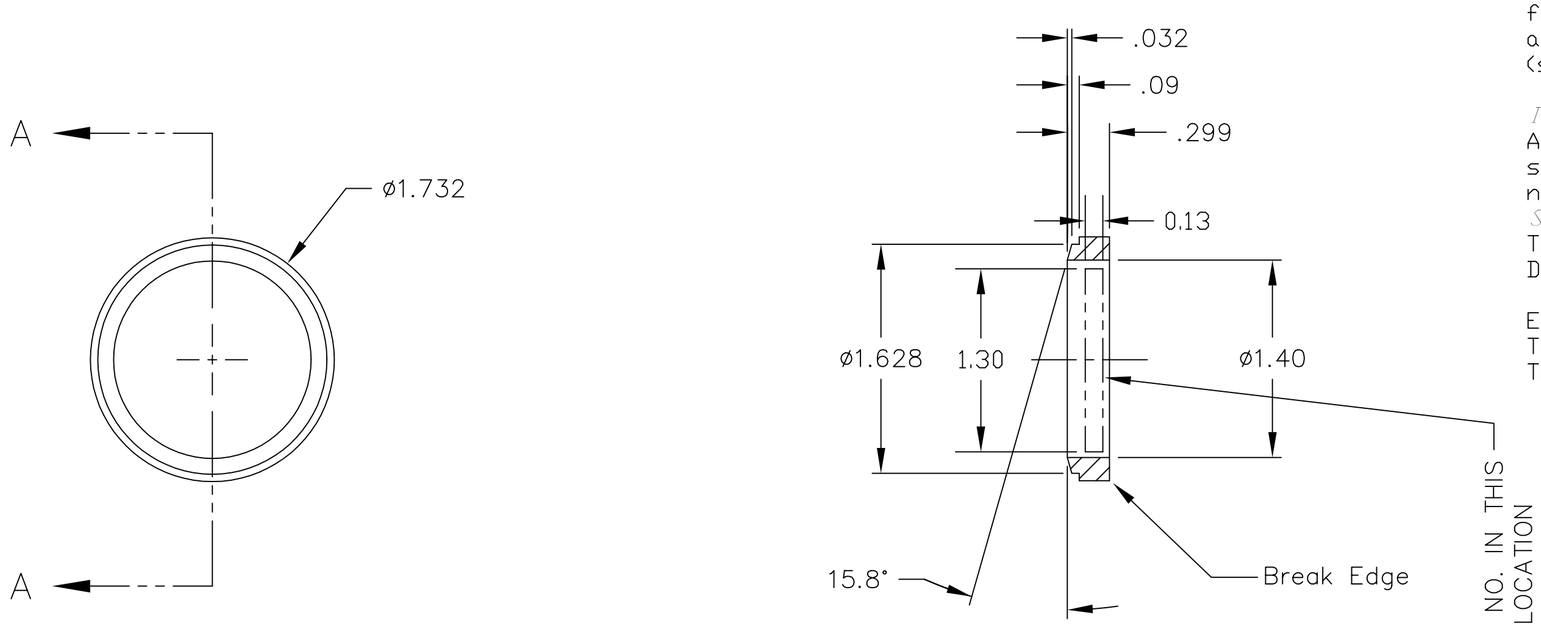

SECTION A–A

MARK PART NO. IN THIS
APPROXIMATE LOCATION
INSIDE

NOTES: (UNLESS OTHERWISE SPECIFIED)

~~Liquid contaminants/Machining Lubricants~~
~~Liquids containing hydrocarbons or other contaminants, other than the machining fluids specified herein, shall not be allowed to come into contact with suspension material at any time. All machining fluids shall be water soluble and free of sulfur, chlorine and silicone; such as Cincinnati Milacron's Cimtech 410 (stainless steel).~~

Identification_Serial Number
A serial number shall be etched, or scribed on the part see note drawing note.

Serial Number Format
The Serial number shall be of the format:
D99xxxx-x - 001

Example: D990021-A-001
The drawing number, The revision number,
The sequential part number

ref. make 1 per assembly

REF.	QTY.	PART or DRWG No.	NOMENCLATURE or DESCRIPTION	MATERIAL

PARTS and MATERIAL LIST

UNLESS OTHERWISE SPECIFIED
DIMENSIONS ARE IN INCHES

TOLERANCES:
FRACTIONAL ±1/16
ANGULAR ±.25°
~~ANGULARMACH ± BEND ±~~
TWO PLACE DECIMAL ± .01
THREE PLACE DECIMAL ± .005
FINISHED SURFACE RMS 63
BREAK CORNERS IN: .015 OUT: .015
REMOVE ALL BURRS

MATERIAL: 6061 T-6 ALUM
HEAT TREAT: /
FINISH:

DWG. NO.	DESCRIPTION
REFERENCE DRAWINGS	

USED ON: XXX
NEXT ASS'Y: XXX

REV	DESCRIPTION	DCN NUMBER	-	APPR'D	CHECK	DRWN	DATE
C	MOVED MARK TO INSIDE					kenm	11-2-99
B	FOR FABRICATION					kenm	6-2-99
00	PRE-RELEASE	-	-			CHAPUT	11-3-98

ISSUE DESCRIPTION

LIGO CALIFORNIA INSTITUTE OF TECHNOLOGY
MASSACHUSETTS INSTITUTE OF TECHNOLOGY

SPACER, REAR
EYEPIECE LENS

CAD FILE: D980647-C
SIZE: B
DWG. NO.: D980647-C
SCALE: FULL
SHEET: 1OF1