REV.	DATE	DCN #	DRAWING TREE #
v1	9 Apr. 2011	E1100015	E1100016

NOTES CONTINUED:

4. ALL MACHINING FLUIDS MUST BE FULLY SYNTHETIC, FULLY WATER SOLUBLE AND FREE OF SULFUR, SILICONE AND CHLORINE.
5. SCRIBE, ENGRAVE, OR MECHANICALLY STAMP (NO INKS OR DYES) DRAWING PART NUMBER, REVISION (AND VARIANT OR "TYPE" IF APPLICABLE ON NOTED SURFACE OF PART FOLLOWED ON THE NEXT LINE WITH A THREE DIGIT SERIAL NUMBER. SERIAL NUMBERS START AT 001 FOR THE FIRST ARTICLE AND PROCEED CONSECUTIVELY. USE MINIMUM 0.12 HIGH CHARACTERS, UNLESS THE SIZE OF THE PART DICTATES SMALLER CHARACTERS. A VIBRATORY TOOL MAY BE USED. EXAMPLE DXXXXXXX-VY, TYPE-XX, S/N XXX.
6. APPROXIMATE WEIGHT = 41.854 LB.
7. ALL PARTS SHALL BE MANUFACTURED IN ACCORDANCE WITH LIGO SPECIFICATION E0900364.
8. COATING: HI-T-LUBE, MAGNAPLATE INC.

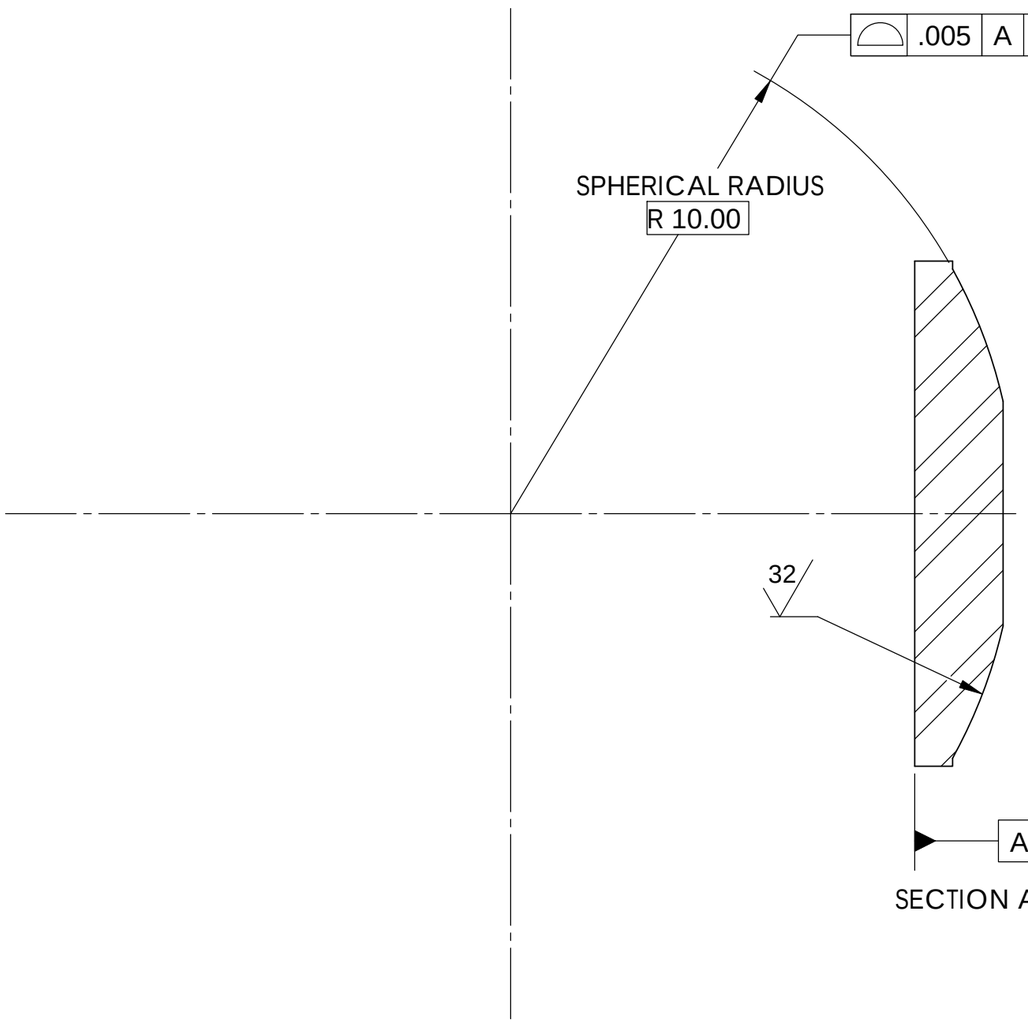

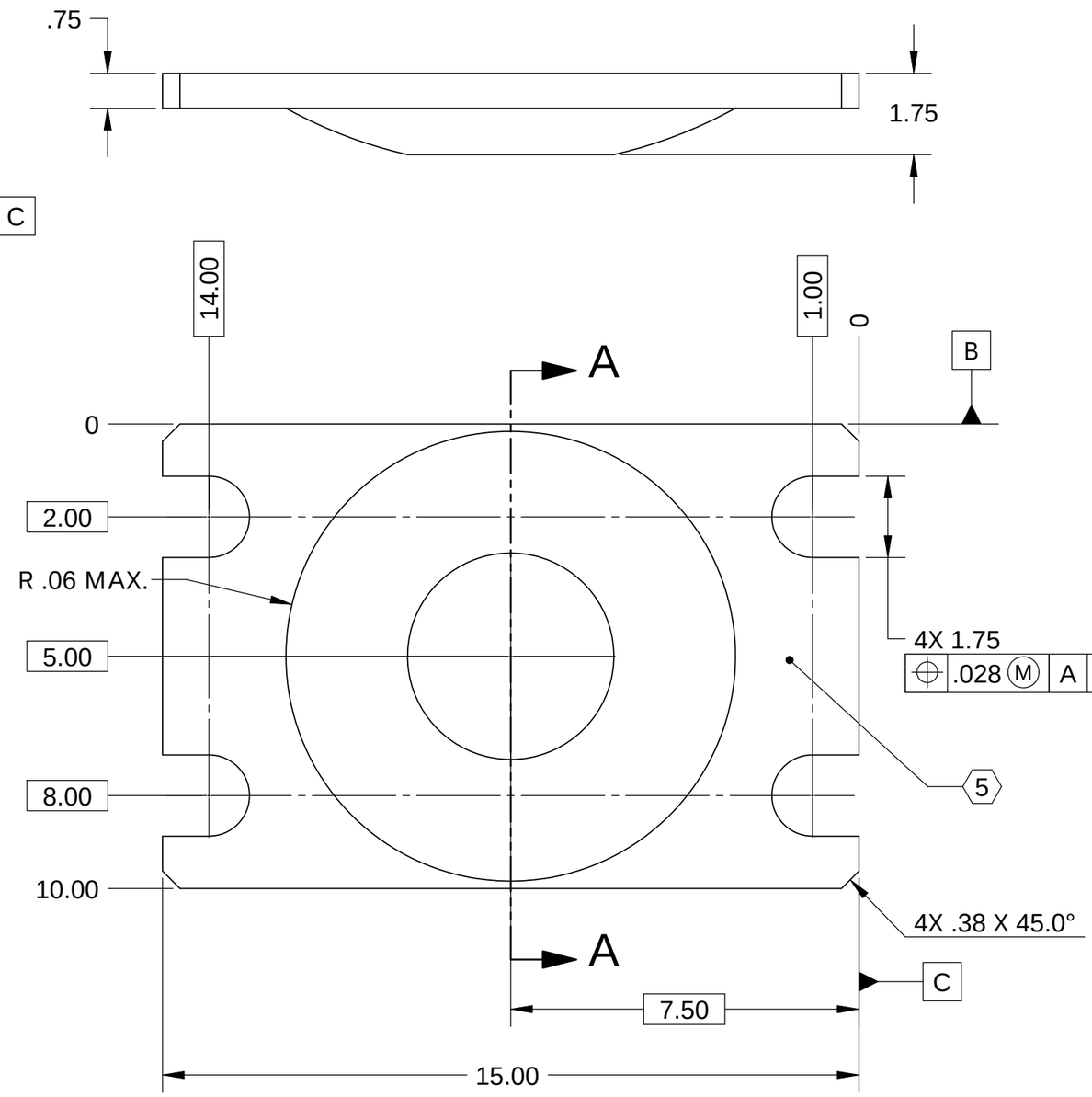

NOTES AND TOLERANCES: (UNLESS OTHERWISE SPECIFIED)					
DIMENSIONS ARE IN INCHES TOLERANCES: .XX ± .015 .XXX ± .005 ANGULAR ± .5°	1. INTERPRET DRAWING PER ASME Y14.5-1994. 2. REMOVE ALL SHARP EDGES, .03 x 45°. 3. DO NOT SCALE FROM DRAWING.		LIGO CALIFORNIA INSTITUTE OF TECHNOLOGY MASSACHUSETTS INSTITUTE OF TECHNOLOGY	PART NAME: Ligo BSC Support Tube Spherical Mnt	
	MATERIAL: Plain Carbon Steel	FINISH: 63 µinch	SYSTEM: ADVANCED LIGO / SUB-SYSTEM: SEI	DESIGNER: R.SMITH 28 May 1997	SIZE: B / DWG. NO.: D972123 / REV.: v1
			NEXT ASSY: D1100612	DRAFTER: M.HILLARD 9 Apr. 2011	
				CHECKER: T.THOMPSON 10 July 1997	
				APPROVAL: K.MASON 9 Apr. 2011	SCALE: 1:3 / PROJECTION: / SHEET 1 OF 1

D972123, PART PDM REV: X-006, DRAWING PDM REV: X-001