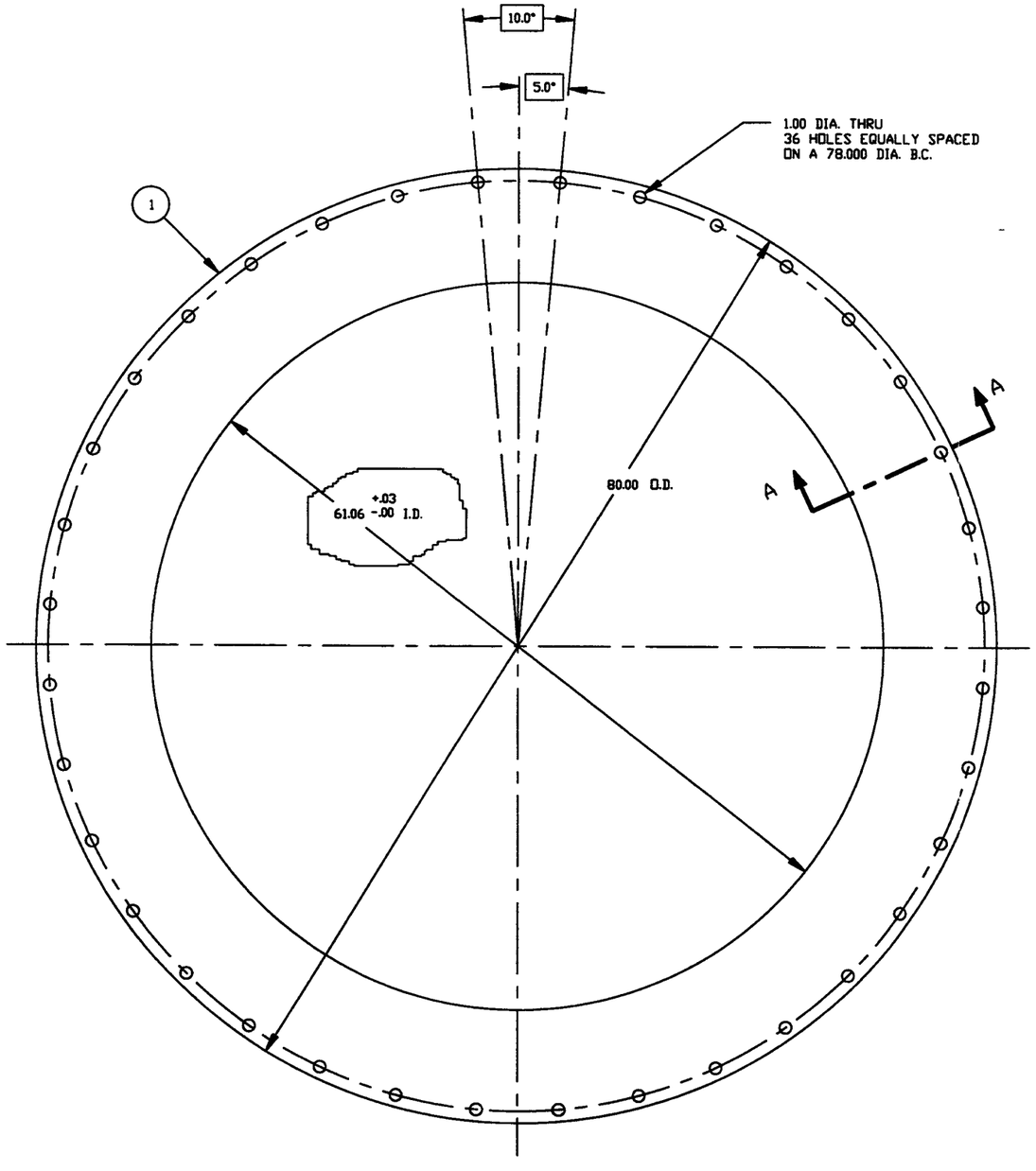

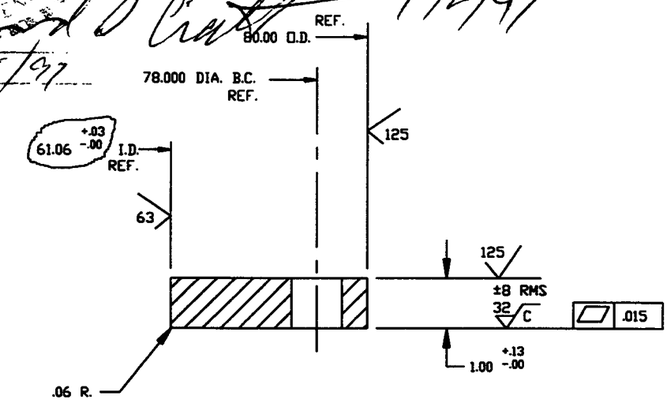

SECTION "A-"A"

NOTE:

1: FLANGES WILL BE USED IN ULTRA HIGH VACUUM SERVICE
SEE SPECIFICATION V049-2-040 FOR MATERIAL REQUIREMENTS
SEE SPECIFICATION V049-2-136 FOR MACHINING REQUIREMENTS

2: ALL MATERIAL TO BE 304L STAINLESS STEEL

3: FLANGES MUST BE PACKAGED, HANDLED, AND SHIPPED IN SUCH A MANNER AS TO MAINTAIN SPECIFIED SURFACE FINISHES AND FLATNESS TOLERANCES.

4: MACHINE TOOL LAY TO BE CONCENTRIC ON ALL SURFACES THAT REQUIRE A 32 RMS FINISH

5: NO ABRASIVE STONES, CLOTHS OR GRINDING WHEELS MAY BE USED.

6: NO OIL BASED OR HYDROCARBON BASED CUTTING FLUIDS TO BE USED.

7: NO CARBON STEEL OR OTHER SOURCE OF IRON CONTAMINATION ARE TO COME IN CONTACT WITH FLANGES DURING MANUFACTURING OR HANDLING.

8: STEAM CLEAN & WRAP IN POLYETHELENE TO PREVENT CONTAMINATION DURING SHIPPING.

THIS FLANGE TO BE MADE FROM P/N V049M256-1

WEIGHT: 594#

PROPRIETARY AND CONFIDENTIAL

THIS DOCUMENT CONTAINS PROPRIETARY INFORMATION BELONGING TO PROCESS SYSTEMS INTERNATIONAL, INC. OR ITS AFFILIATED COMPANIES AND SHALL BE USED ONLY FOR THE PURPOSE FOR WHICH IT WAS SUPPLIED. IT SHALL NOT BE COPIED, REPRODUCED OR OTHERWISE USED, NOR SHALL SUCH INFORMATION BE FURNISHED IN WHOLE OR IN PART TO OTHERS EXCEPT IN ACCORDANCE WITH THE TERMS OF ANY AGREEMENT UNDER WHICH IT WAS SUPPLIED OR WITH THE PRIOR WRITTEN CONSENT OF PROCESS SYSTEMS INTERNATIONAL, INC. AND SHALL BE RETURNED UPON REQUEST.

DWG. NO.	DESCRIPTION
REFERENCE DRAWINGS	

UNLESS OTHERWISE SPECIFIED
DIMENSIONS ARE IN INCHES
TOLERANCES:
FRACTIONAL ± 1/16
ANGULAR/MACH ±0°-30' BEND ±2°
TWO PLACE DECIMAL ± .010
THREE PLACE DECIMAL ± .005
FINISHED SURFACE RMS 63
BREAK CORNERS: IN.005 OUT.005
REMOVE ALL BURRS

DO NOT SCALE THIS DWG.

USED ON:

NEXT ASS'Y:

REV.	DESCRIPTION	CHKD	DRAWN	DATE	DEO
0	RELEASED FOR FABRICATION	SPIDER	DA	7/31/96	0218

ISSUE DESCRIPTION

PROCESS SYSTEMS INTERNATIONAL INC.
30 WALKUP DR. WESTBOROUGH, MASSACHUSETTS 01581 USA

61.06 I.D. x 80" O.D. FLG. DETAIL
(FLAT FACED)
LIGO VACUUM EQUIPMENT

CAD FILE	SIZE	DWG. NO.	REV.
V0494087	C	V049-4-087	0

SCALE 1 1/2"=1'-0" SHEET 1 OF 1

Aug 16, 1996 - 10:27:42

LIGO-D970361-00-V