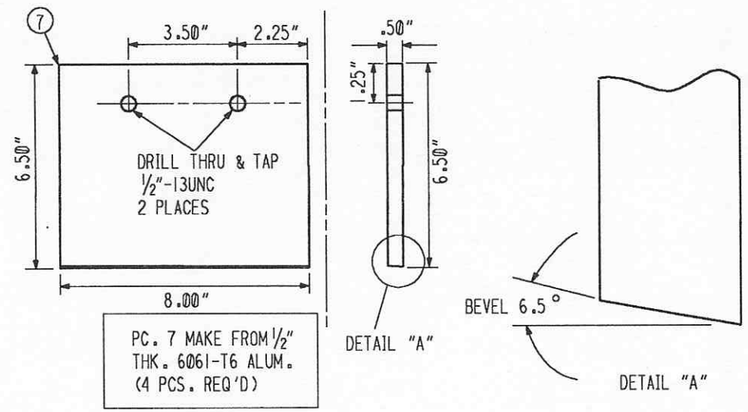

PC. 7 MAKE FROM 1/2" THK. 6061-T6 ALUM. (4 PCS. REQ'D)

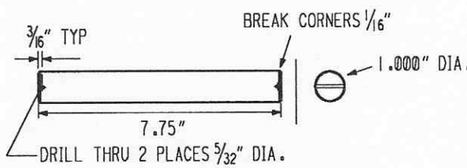

PC. 9 MAKE FROM 1.000" DIA STAINLESS STEEL ROUND BAR STOCK (2 PCS. REQ'D)

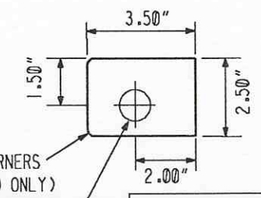

MATCH DRILL 1.005" DIA. AFTER WELDING PC. 8'S TO PC. 21

PC. 8 MAKE FROM 1/2" THK. 6061-T6 ALUM. (4 PCS. REQ'D)

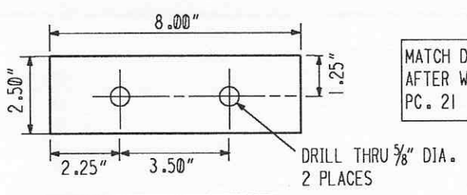

PC. 21 MAKE FROM 1/2" THK. 6061-T6 ALUM. (4 PCS. REQ'D)

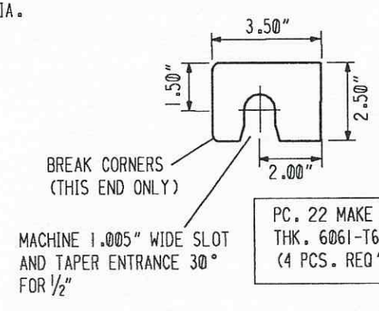

PC. 22 MAKE FROM 1/2" THK. 6061-T6 ALUM. (4 PCS. REQ'D)

ALSO PROVIDE EIGHT 1" STAINLESS STEEL WASHERS McMASTER-CARR #92141A038 PC. #16

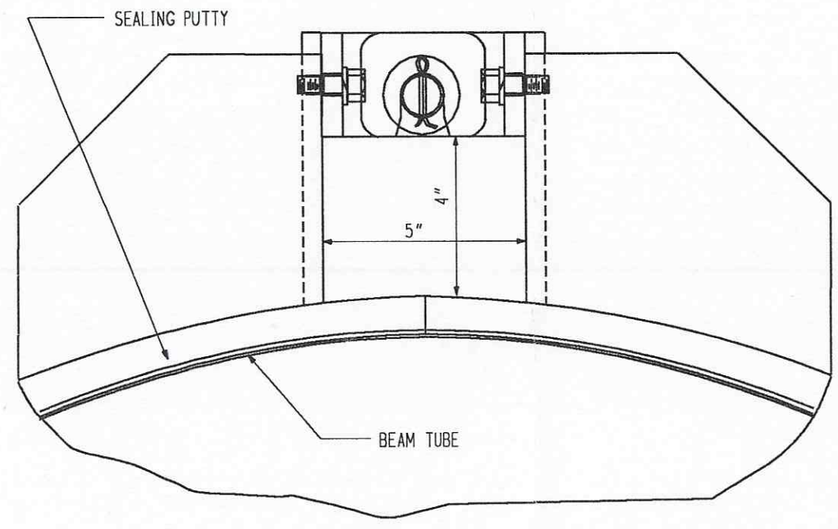

INDICATES CHANGE FROM PREVIOUS ISSUE

Supplier's/Purchaser's No.

CBI

LIGO-BEAM TUBE
HANFORD, WA & LIVINGSTON, LA

CIRCUMFERENTIAL LEAK TEST BOX
HINGE DETAILS

Customer's No.
By CLD Chkd DWD Date 2-26-96
M. L. TELLALIAN
Engineering Supervisor

Contract No. 953571
Dwg. ER603 Rev. 1
Sheet

LIGO-D970056-01-B

Revisions	By	Chkd	Date	Remarks
	EPD		6-12-96	REMOVED BOTTOM NOTE INSIDE THE TITLE BLOCK

THIS DRAWING HAS BEEN PREPARED BY HOUSTON CONSTRUCTION SERVICES DEPT. (CSC) ER603 FORM CHS 30 A REV SEP 93