DATE: 06/13/96 TIME: 20:36:53
DESIGN FILE: I:\ligo\site2\st\las122.dgz

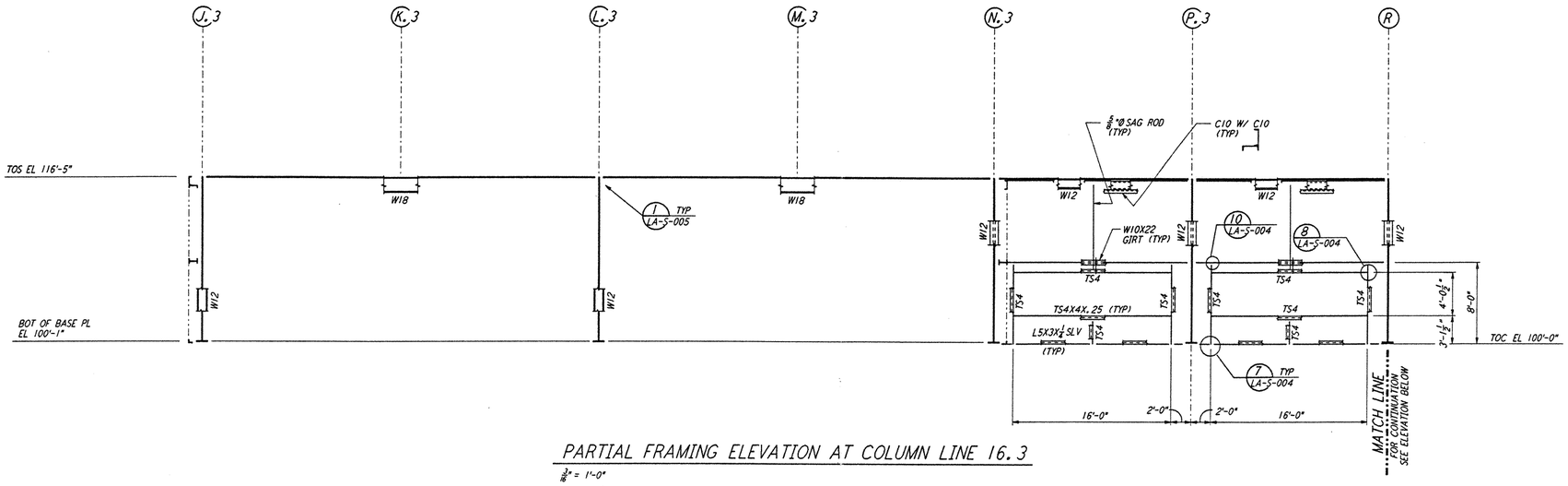

PARTIAL FRAMING ELEVATION AT COLUMN LINE 16.3

3/16" = 1'-0"

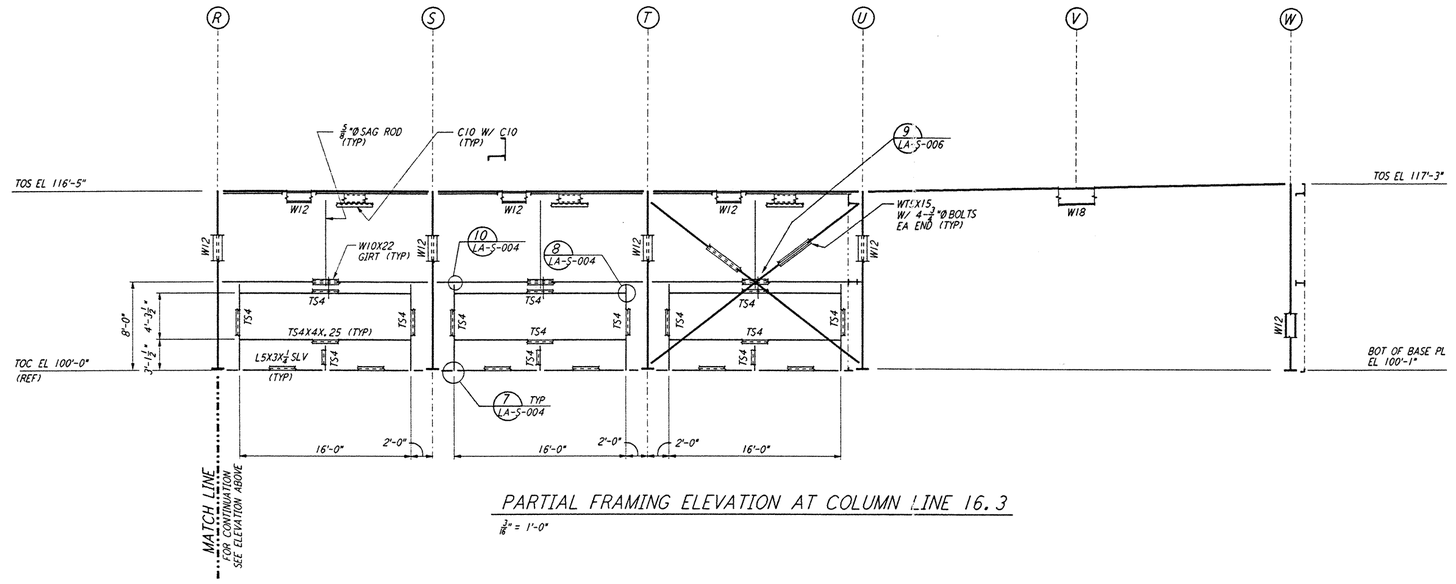

PARTIAL FRAMING ELEVATION AT COLUMN LINE 16.3

3/16" = 1'-0"

NOTES:

1. FOR GENERAL NOTES, ABBREVIATIONS AND SYMBOLS SEE DRAWING LA-S-001.
2. FOR CHANNEL, GIRT AND EAVE STRUT CONNECTION DETAILS SEE DRAWING LA-S-005.
3. FOR W BEAM TO COLUMN WEB/FLANGE CONNECTIONS, SEE DETAILS 6/LA-S-004, 3/LA-S-007 & 4/LA-S-007 TYPICAL UNLESS OTHERWISE NOTED.
4. FOR BASE ANGLE (L5X3) CONNECTIONS, SEE SECTION A/LA-S-003.
5. FOR VERT BRCG CONNECTIONS SEE 2/LA-S-006 8/LA-S-006 1/LA-S-007 2/LA-S-007 TYP UON.

0 4 8 12 16 20FT
3/16" = 1'-0"

LIGO-D960938-B-O

REFERENCES		REVISIONS						
DRAWING NO.	DESCRIPTION	NO.	DATE	BY	CHKD	ENGR	PROJ	DESCRIPTION
		B	6-14-96	MCS				FINAL DESIGN REVIEW
		A	10-31-95				TDM	PRELIMINARY DESIGN REVIEW

DRAWN	MCS
CHECKED	
ENGINEER	
PROJ	

PARSONS
100 WEST WALNUT STREET
PASADENA, CALIFORNIA

LIGO
CALIFORNIA INSTITUTE OF TECHNOLOGY
MASSACHUSETTS INSTITUTE OF TECHNOLOGY

LASER INTERFEROMETER
GRAVITATIONAL-WAVE OBSERVATORY
SITE NO. 2 - LIVINGSTON, LOUISIANA

TITLE: STRUCTURAL CORNER STATION OSB FRAMING ELEVATIONS SHEET 6

SCALE: AS NOTED | CONTRACT NUMBER: PP150969 | PROJECT NUMBER: 8094

SHEET NUMBER: LA-S-122 | REVISIONS: B

LIGOLAF.BDR

This document and the design it covers are the property of PARSONS. They are loaned only with the borrower's expressed written agreement that they will not be reproduced, copied, loaned, exhibited, or used in any other way, except by written consent from PARSONS to the borrower.