This document and the design it covers are the property of PARSONS. They are loaned only with the borrower's expressed written agreement that they will not be reproduced, copied, loaned, exhibited, or used in any other way, except by written consent from PARSONS to the borrower.

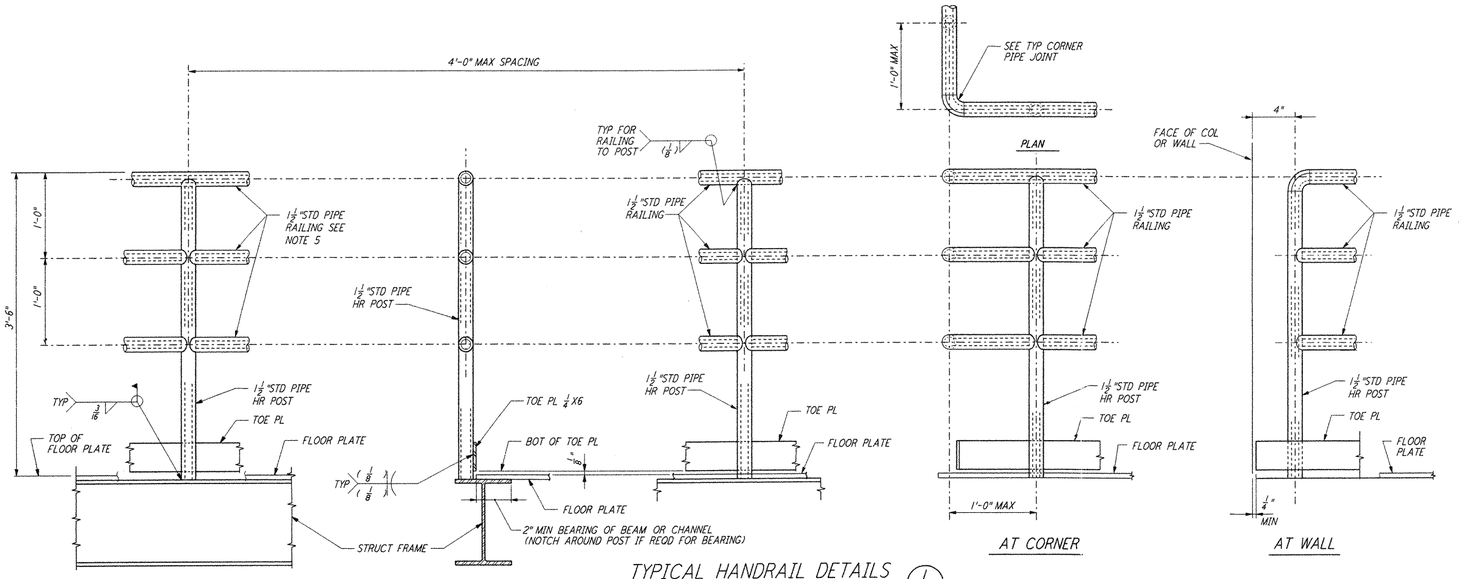

TYPICAL HANDRAIL DETAILS 1

NOTES:

1. FOR GENERAL NOTES, ABBREVIATIONS AND SYMBOLS SEE DRAWING LA-S-001.
2. SEE DESIGN DRAWINGS FOR STRUCTURAL MEMBER SIZE AND DIMENSIONS.
3. ALL EXPOSED SHARP EDGES AND CORNERS SHALL BE GROUND SMOOTH.
4. GALVANIZED MEMBER TO BE FIELD WELDED SHALL BE LEFT UNGALVANIZE A DISTANCE OF ONE INCH FROM AREA OF WELDING. THESE AREAS SHALL BE PAINTED WITH GALVANIZE COATING AFTER WELDING.
5. SHOP-WELDED HANDRAIL SECTIONS SHALL NOT EXCEED 20'-0" IN LENGTH.
6. ALL MISCELLANEOUS STEEL SHOWN ON THIS DRAWING SHALL BE GALVANIZED UNLESS OTHERWISE NOTED ON DESIGN DRAWINGS.
7. PROVIDE CLOSURE PL BETWEEN STAIR TREADS.

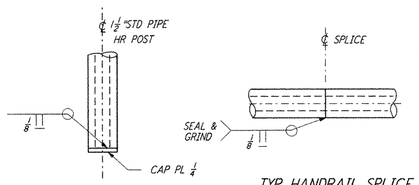

CAP PLATE

TYP HANDRAIL SPLICE

DETAIL 2

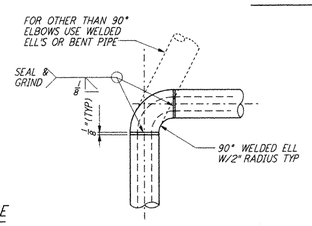

TYP CORNER PIPE JOINT

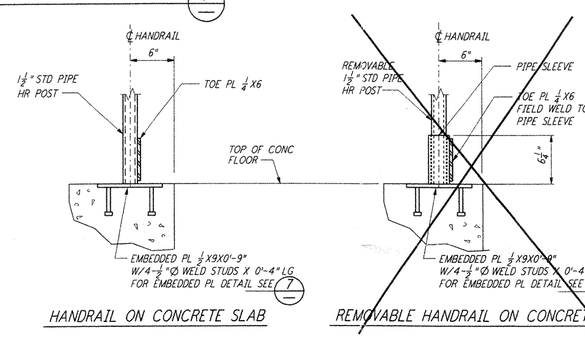

HANDRAIL ON CONCRETE SLAB

REMOVABLE HANDRAIL ON CONCRETE SLAB

DETAIL 3

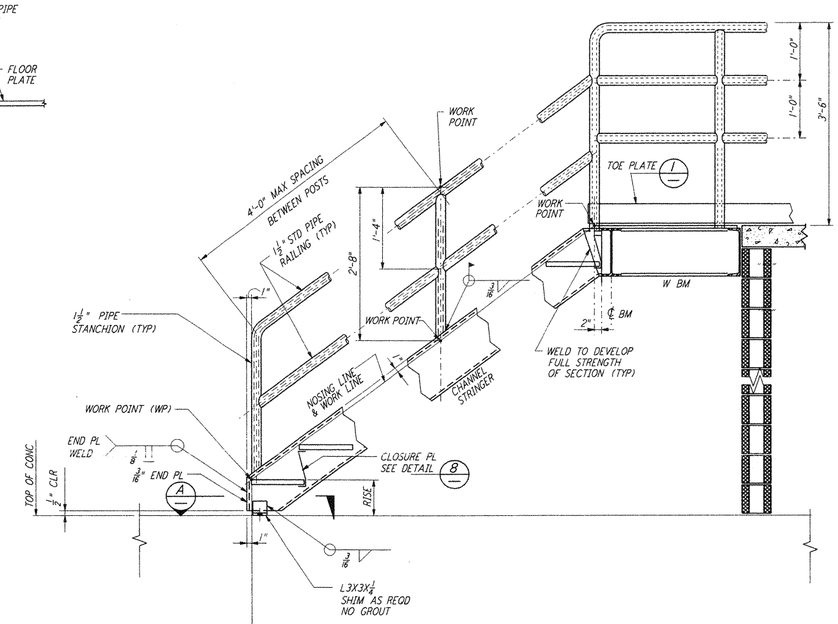

TYPICAL STAIR DETAILS 4

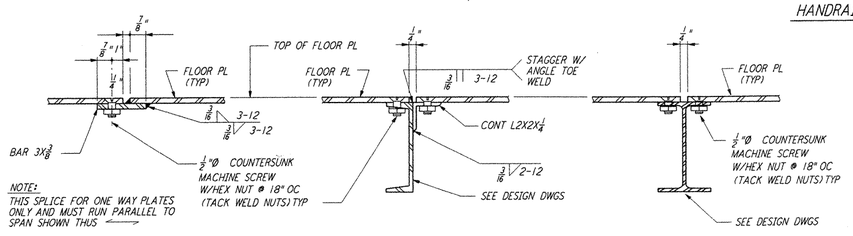

TYP SPLICE CONN AT REMOVABLE FLOOR OR CHECKERED PLATE 5

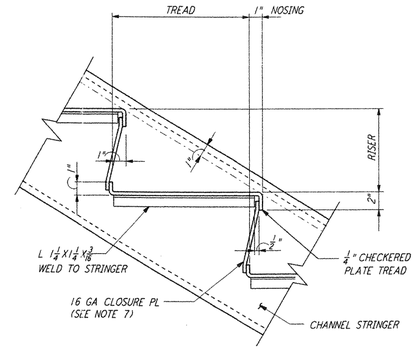

CHECKERED PLATE TREAD DETAIL 8

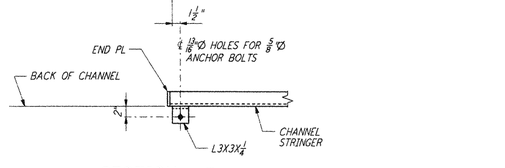

SECTION A

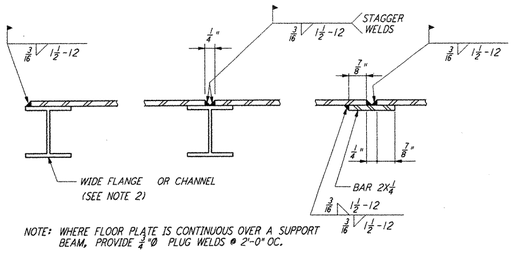

TYP FIXED FLOOR OR CHECKERED PLATE 6

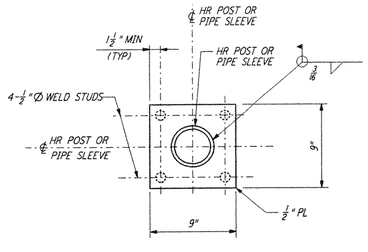

EMBEDDED PLATE DETAIL 7

LIGO-D960915-01-O

REFERENCES		REVISIONS						
DRAWING NO.	DESCRIPTION	NO.	DATE	BY	CHKD	ENGR	PROJ	DESCRIPTION
		1	08-07-98	WA				ISSUED FOR AS-BUILT

ISSUED FOR CONSTRUCTION		
DRAWN	MCS	11-15-96
CHECKED	DDM	11-15-96
ENGINEER	BP	11-15-96
PROJ	TDM	11-15-96

AS-BUILT DRAWINGS

PARSONS
100 WEST WALNUT STREET
PASADENA, CALIFORNIA

LIGO
CALIFORNIA INSTITUTE OF TECHNOLOGY
MASSACHUSETTS INSTITUTE OF TECHNOLOGY

LASER INTERFEROMETER
GRAVITATIONAL-WAVE OBSERVATORY
SITE NO. 2 - LIVINGSTON, LOUISIANA

TITLE: STRUCTURAL STANDARD STRUCTURAL STEEL STAIR & HANDRAIL DETAILS

SCALE	CONTRACT NUMBER	PROJECT NUMBER
NONE	PP150969	8094

SHEET NUMBER: LA-S-009 REVISIONS: 1

LIGOLAF.BDR

Thu Aug 13 1324:16 1998 C:\PLOT\QUES\S3-V3682.OCF 52085 K:\V3682\+100%.prf