This document and the design it covers are the property of PARSONS. They are loaned only with the borrower's expressed written agreement that they will not be reproduced, copied, loaned, exhibited, or used in any other way, except by written consent from PARSONS to the borrower.

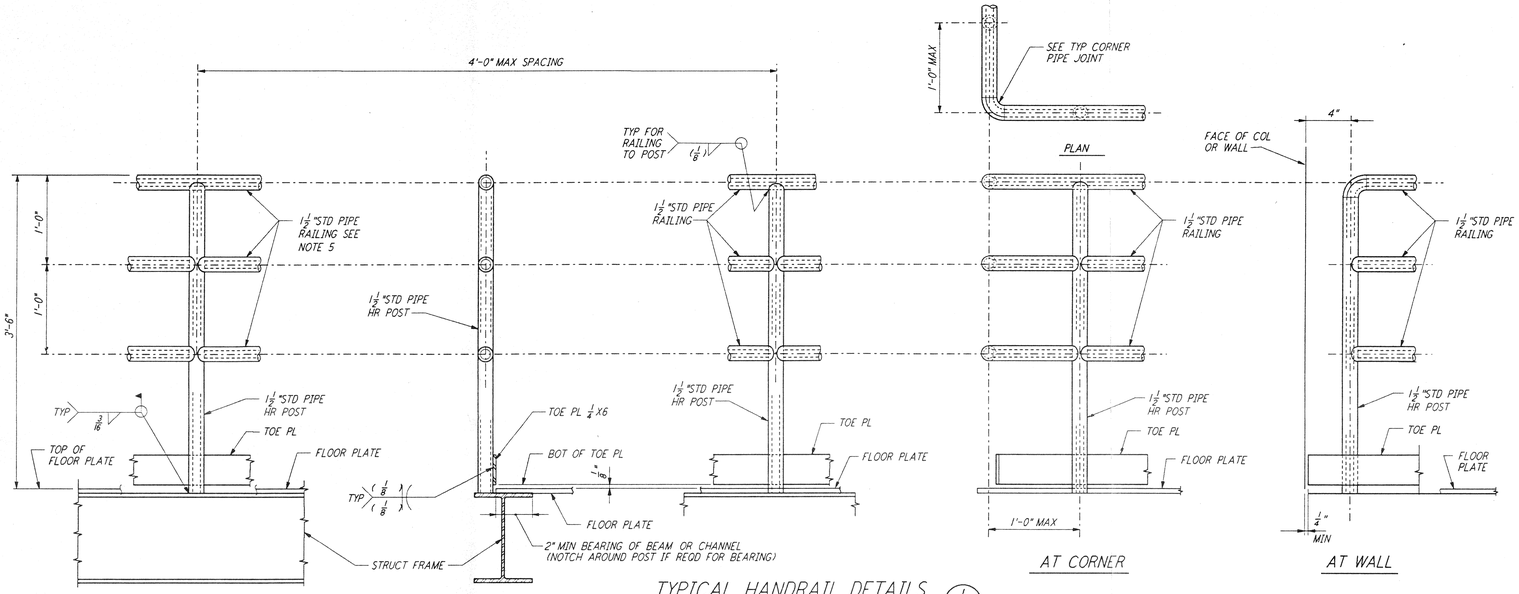

AT CORNER

AT WALL

TYPICAL HANDRAIL DETAILS (1)

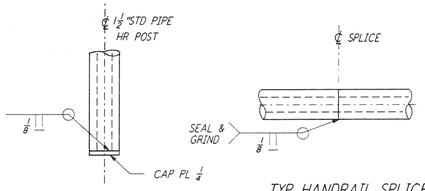

CAP PLATE

TYP HANDRAIL SPLICE

DETAIL (2)

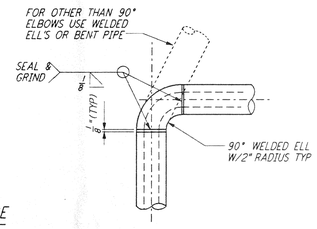

TYP CORNER PIPE JOINT

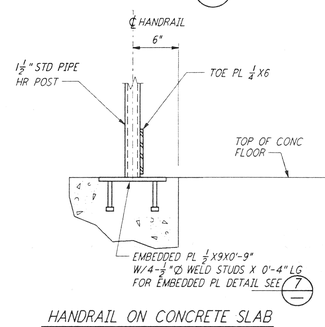

HANDRAIL ON CONCRETE SLAB

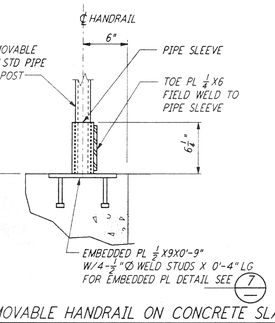

REMOVABLE HANDRAIL ON CONCRETE SLAB

DETAIL (3)

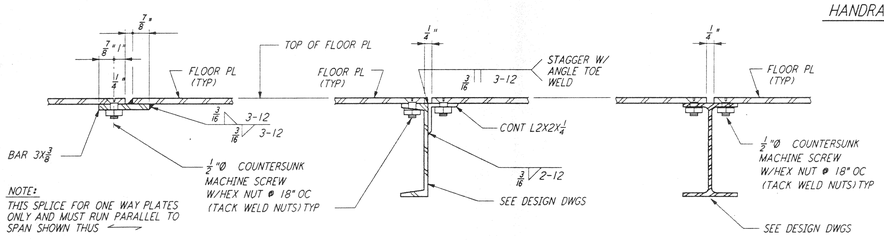

NOTE: THIS SPLICE FOR ONE WAY PLATES ONLY AND MUST RUN PARALLEL TO SPAN SHOWN THUS ⟶

TYP SPLICE CONN AT REMOVABLE FLOOR OR CHECKERED PLATE (5)

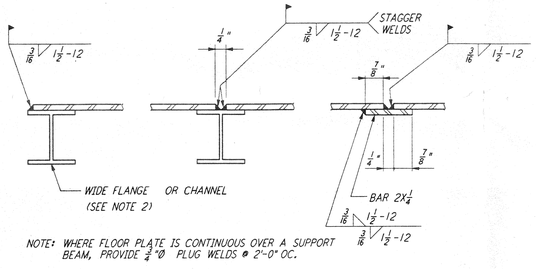

NOTE: WHERE FLOOR PLATE IS CONTINUOUS OVER A SUPPORT BEAM, PROVIDE ¾"Ø PLUG WELDS @ 2'-0" OC.

TYP FIXED FLOOR OR CHECKERED PLATE (6)

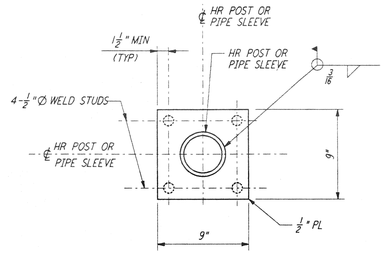

EMBEDDED PLATE DETAIL (7)

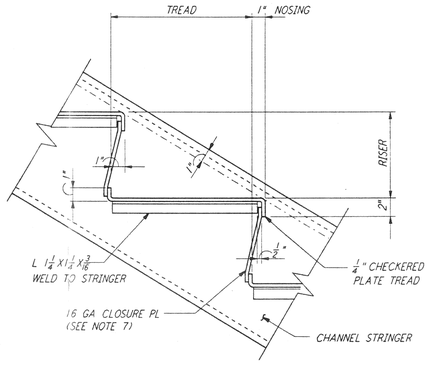

CHECKERED PLATE TREAD DETAIL (8)

NOTES:

1. FOR GENERAL NOTES, ABBREVIATIONS AND SYMBOLS SEE DRAWING LA-S-001.
2. SEE DESIGN DRAWINGS FOR STRUCTURAL MEMBER SIZE AND DIMENSIONS.
3. ALL EXPOSED SHARP EDGES AND CORNERS SHALL BE GROUND SMOOTH.
4. GALVANIZED MEMBER TO BE FIELD WELDED SHALL BE LEFT UNGALVANIZE A DISTANCE OF ONE INCH FROM AREA OF WELDING. THESE AREAS SHALL BE PAINTED WITH GALVANIZE COATING AFTER WELDING.
5. SHOP-WELDED HANDRAIL SECTIONS SHALL NOT EXCEED 20'-0" IN LENGTH.
6. ALL MISCELLANEOUS STEEL SHOWN ON THIS DRAWING SHALL BE GALVANIZED UNLESS OTHERWISE NOTED ON DESIGN DRAWINGS.
7. PROVIDE CLOSURE PL BETWEEN STAIR TREADS.

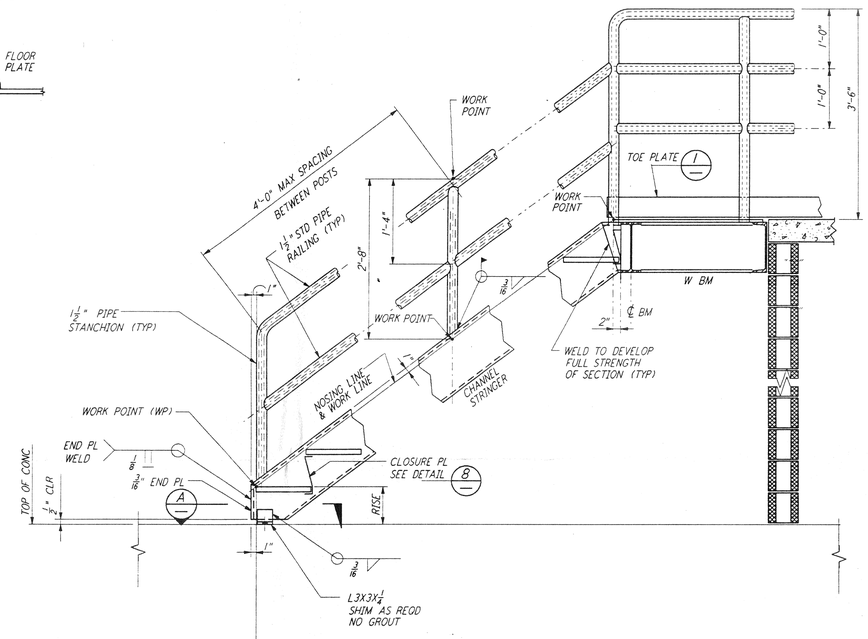

TYPICAL STAIR DETAILS (4)

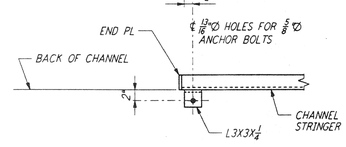

SECTION (A)

REFERENCES		REVISIONS						
DRAWING NO.	DESCRIPTION	NO.	DATE	BY	CHKD	ENGR	PROJ	DESCRIPTION

ISSUED FOR CONSTRUCTION		
DRAWN	MCS	11-15-96
CHECKED		11-15-96
ENGINEER		11-15-96
PROJ		11/15/96

STATE OF LOUISIANA — JAMES A. LAUTREC JR. — REG. NO. 23857 — PROFESSIONAL ENGINEER IN CIVIL ENGINEERING — 11-15-96

PARSONS
100 WEST WALNUT STREET
PASADENA, CALIFORNIA

LIGO
CALIFORNIA INSTITUTE OF TECHNOLOGY
MASSACHUSETTS INSTITUTE OF TECHNOLOGY

LASER INTERFEROMETER GRAVITATIONAL-WAVE OBSERVATORY
SITE NO. 2 - LIVINGSTON, LOUISIANA

TITLE: STRUCTURAL STANDARD STRUCTURAL STEEL STAIR & HANDRAIL DETAILS

SCALE	CONTRACT NUMBER	PROJECT NUMBER
NONE	PP150969	8094

SHEET NUMBER: LA-S-009 — REVISIONS: 0