DATE: 10/23/96 TIME: 09:18:43
DESIGN FILE: I:\ligo\site2\ce\lac007.dgz

This document and the design it covers are the property of **PARSONS**. They are loaned only with the borrower's expressed written agreement that they will not be reproduced, copied, loaned, exhibited, or used in any other way, except by written consent from **PARSONS** to the borrower.

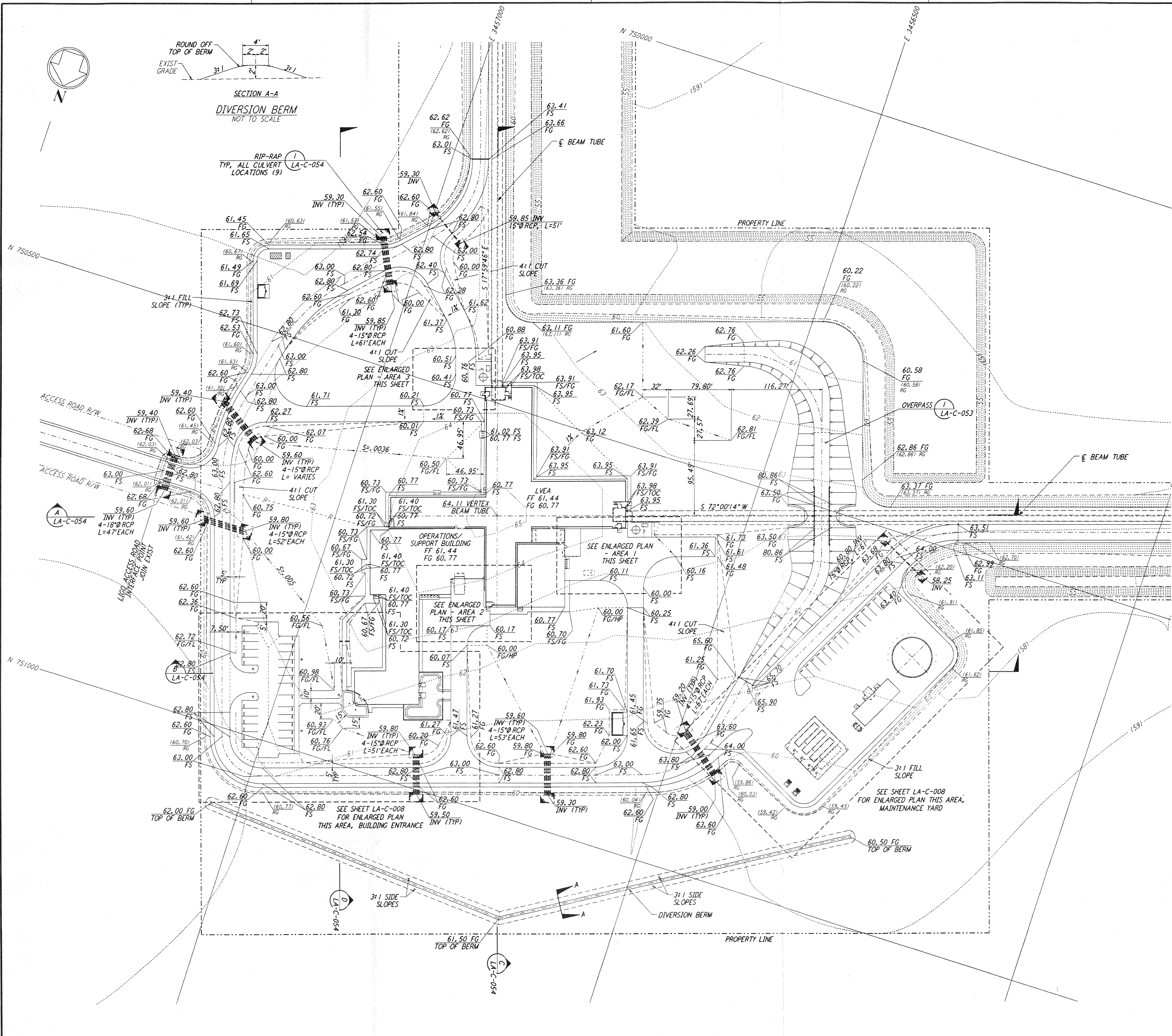


## NOTES:

1. SEE SHEET LA-C-002 FOR GENERAL NOTES, LEGEND AND ABBREVIATIONS.

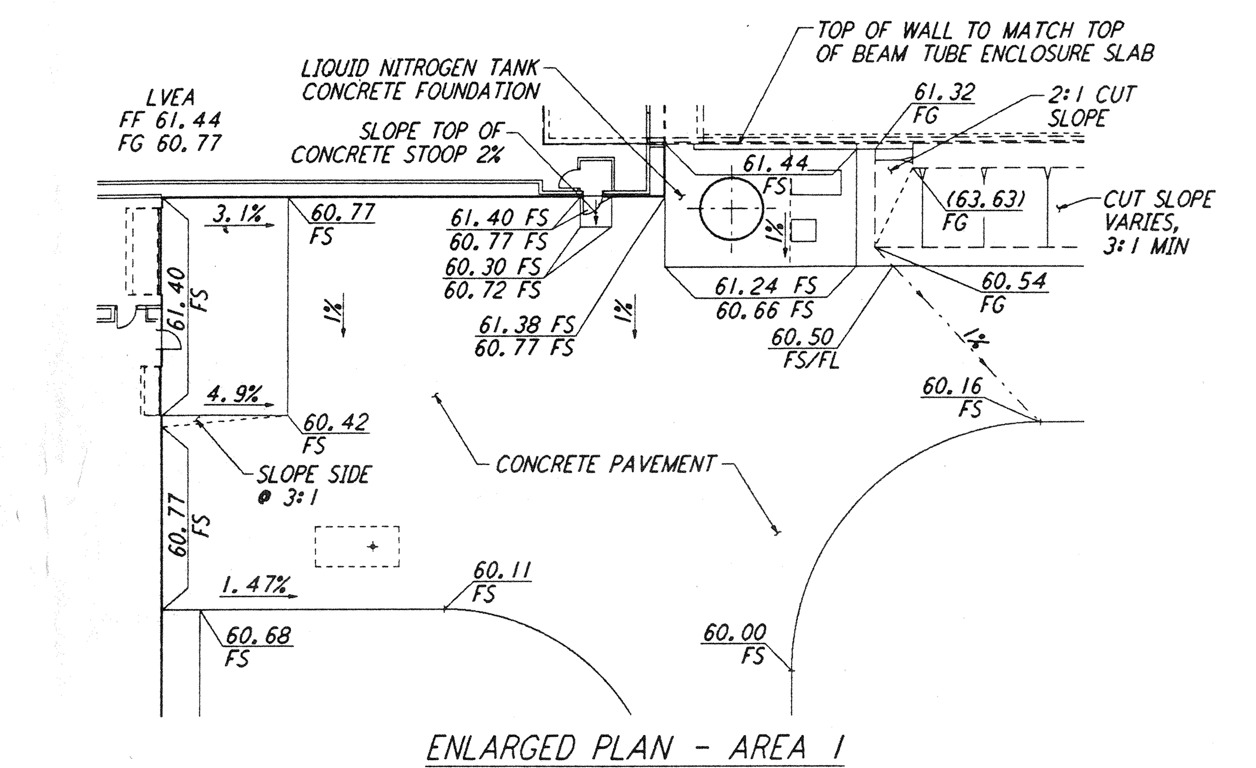


ENLARGED PLAN - AREA 1
SCALE: 1" = 20'

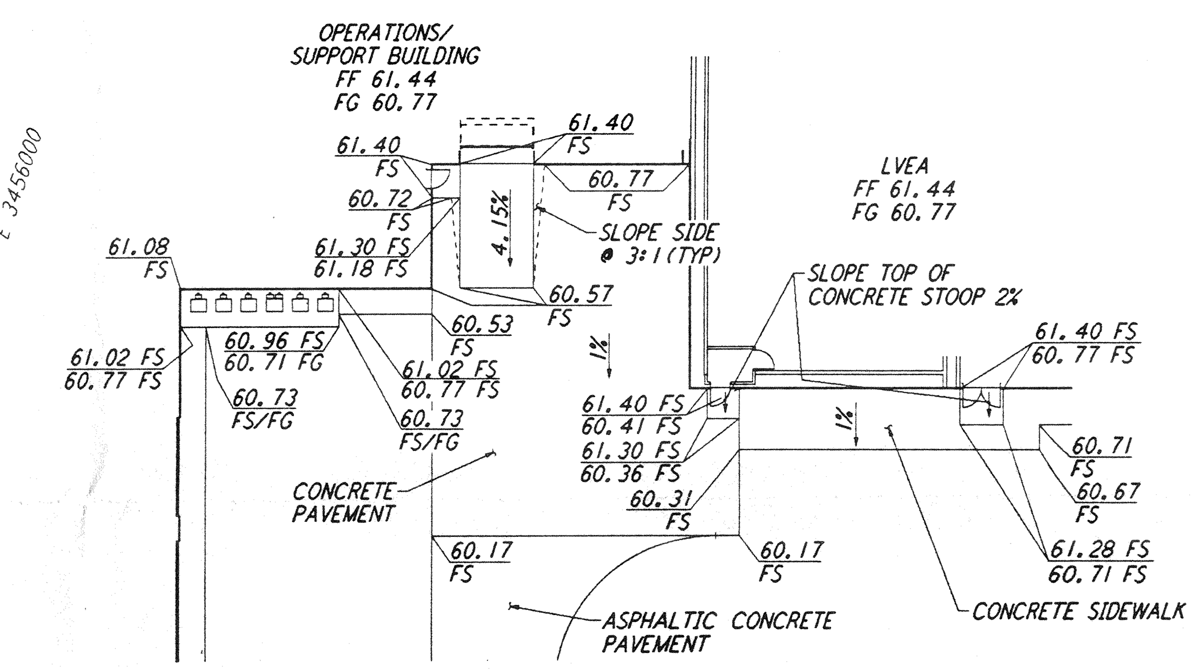


ENLARGED PLAN - AREA 2
SCALE: 1" = 20'

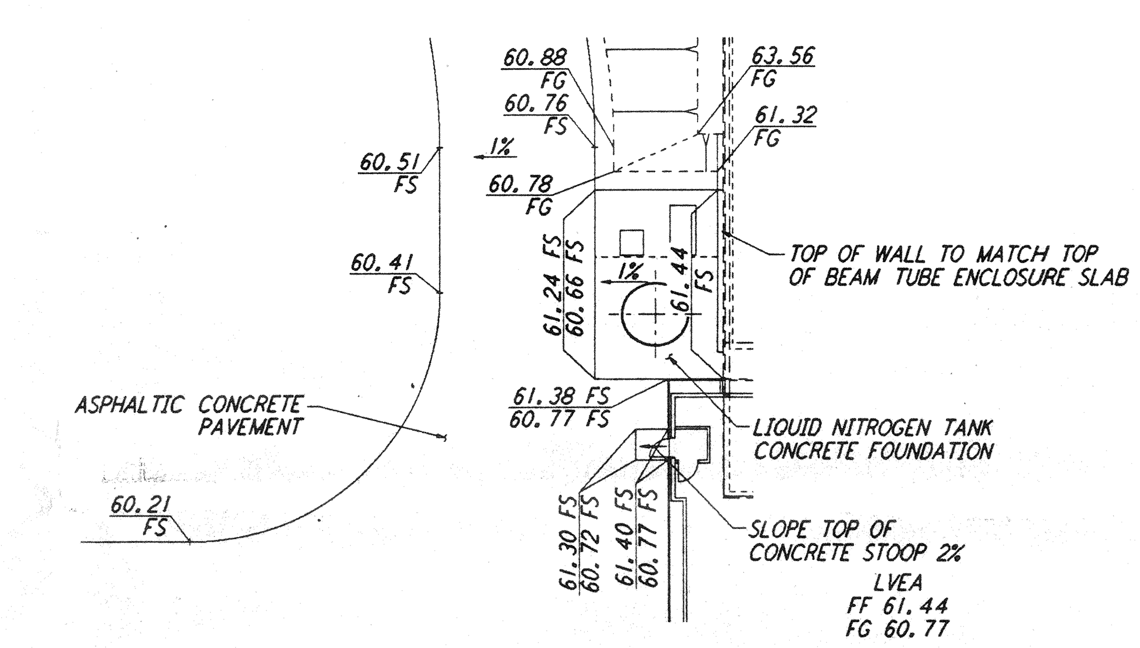


ENLARGED PLAN - AREA 3
SCALE: 1" = 20'

GRAPHIC SCALE 0 50 100 150 200
SCALE: 1" = 50'

| REFERENCES | |
|---|---|
| DRAWING NO. | DESCRIPTION |

| REVISIONS | | | | | | |
|---|---|---|---|---|---|---|
| NO. | DATE | BY | CHKD | ENGR | PROJ | DESCRIPTION |

| △0 ISSUED FOR CONSTRUCTION | | |
|---|---|---|
| DRAWN | WRB | 11-15-96 |
| CHECKED | ML | 11-15-96 |
| ENGINEER | JB | 11/15/96 |
| PROJ | [illegible] | 11/15/96 |

PARSONS
100 WEST WALNUT STREET
PASADENA, CALIFORNIA

LIGO
CALIFORNIA INSTITUTE OF TECHNOLOGY
MASSACHUSETTS INSTITUTE OF TECHNOLOGY

LASER INTERFEROMETER
GRAVITATIONAL-WAVE OBSERVATORY
SITE NO. 2 - LIVINGSTON, LOUISIANA

TITLE: CIVIL CORNER STATION GRADING PLAN

| SCALE | CONTRACT NUMBER | PROJECT NUMBER |
|---|---|---|
| 1" = 50' | PP150969 | 8094 |

SHEET NUMBER: LA-C-007 REVISIONS: △0

LIGO-D960825-00-C