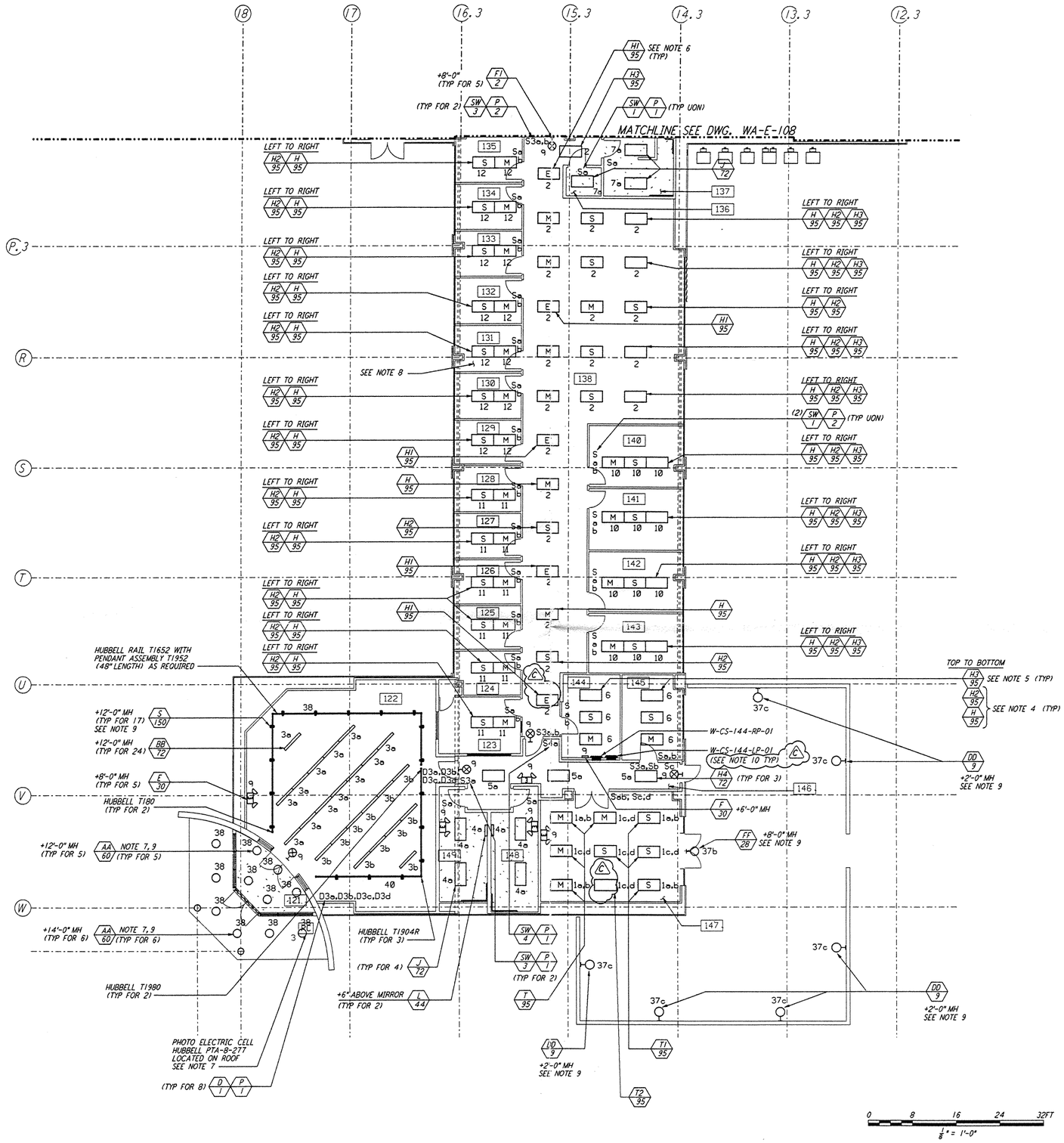

NOTES:

1. FOR ABREVIATIONS AND ACRONYMS SEE DWG. WA-E-001.
2. FOR SYMBOLS SEE DWG. WA-E-002.
3. FOR GENERAL NOTES, SEE DWG. WA-E-102.
4. FIXTURES H-95 AND H2-95 HAVE A FLEXIBLE CABLE (BY VENDOR) CONNECTS WIRES FROM "MASTER" BALLAST TO "SATELLITE" PLUG-IN CONNECTOR. BOTH BALLASTS ARE IN THE "MASTER" UNIT.
5. FIXTURES H3-95 SHALL HAVE ITS BALLASTS PARALLEL SWITCHED FROM ASSOCIATED MASTER FIXTURE H-95.
6. FIXTURES H1-95 SHALL HAVE ITS 2-LAMP BALLAST PARALLEL SWITCH FROM ASSOCIATED MASTER FIXTURE, AND ITS 1-LAMP BALLAST SHALL NOT BE SWITCHED.
7. LIGHTING FIXTURES LOCATION IN VESTIBULE 121 AND AT ENTRY SHALL BE PHOTO ELECTRIC CONTROL VIA PHOTO CELL LOCATED ON ROOF.
8. ALL CIRCUITS SHOWN ON THIS DRAWING ARE FROM PANEL W-CS-144-LP-01 UNLESS OTHERWISE NOTED.
9. CIRCUIT SHOWN FEEDING THESE LIGHTING FIXTURES IS FROM PANEL W-CS-144-RP-01.
10. FOR ALL PANEL FEEDER CONDUIT AND WIRE SIZES SEE SINGLE LINE DIAGRAM DWG WA-E-006. (C)

REFERENCE DRAWINGS:

WA-E-001 ELECTRICAL SYMBOLS, ABBREVIATION & ACRONYMS
WA-E-002 ELECTRICAL STANDARD PLAN SYMBOLS
WA-E-102 ELECTRICAL CS LVEA LIGHTING PLAN
WA-E-115 LIGHTING AND POWER PANEL SCHEDULES
WA-E-116 LIGHTING AND POWER PANEL SCHEDULES

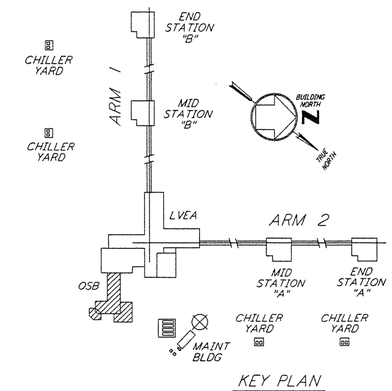

KEY PLAN

LIGO-D960396-C-O

REFERENCES		REVISIONS						
DRAWING NO.	DESCRIPTION	NO.	DATE	BY	CHKD	ENGR	PROJ	DESCRIPTION
		C	5-22-96	RAF			TDM	BID ADDENDUM #2
		B	4-19-96				TDM	FINAL DESIGN REVIEW & BID
		A	10-31-95				TDM	PRELIMINARY DESIGN REVIEW

DRAWN	J. G.
CHECKED	
ENGINEER	
PROJ	

PARSONS
100 WEST WALNUT STREET
PASADENA, CALIFORNIA

LIGO
CALIFORNIA INSTITUTE OF TECHNOLOGY
MASSACHUSETTS INSTITUTE OF TECHNOLOGY

LASER INTERFEROMETER
GRAVITATIONAL-WAVE OBSERVATORY
SITE NO. 1 - HANFORD, WASHINGTON

TITLE: ELECTRICAL CORNER STATION OSB OFFICE AREA LIGHTING PLAN

SCALE	CONTRACT NUMBER	PROJECT NUMBER
AS NOTED	PP150969	8094

SHEET NUMBER: WA-E-107
REVISIONS: C

LIGOWAF3.BOR

This document and the design it covers are the property of PARSONS. They are loaned only with the borrower's expressed written agreement that they will not be reproduced, copied, loaned, exhibited, or used in any other way, except by written consent from PARSONS to the borrower.