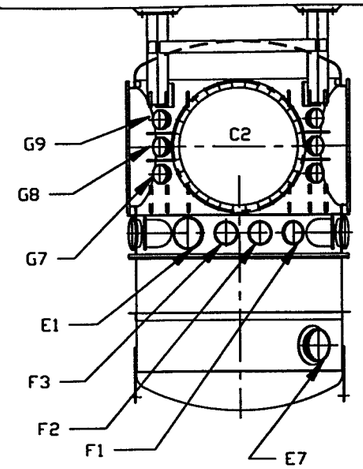

SIDE VIEW

NOTES:

1) BAKEOUT BLANKET VENDOR SHALL PROVIDE SEPARATE REMOVABLE ZONES FOR EACH OF THE FOLLOWING PORTS: E1, E2, F1, F2, F3, F4, F5 & F6

2) PORT SIZE ARE:
   "D & E" PORTS: 14" O.D. TUBE WITH 16 1/2" O.D. CONFLAT FLANGES
   "F" PORTS: 10" O.D. TUBE WITH 12" O.D. CONFLAT FLANGES
   "G" PORTS: 8" O.D. TUBE WITH 10" O.D. CONFLAT FLANGES

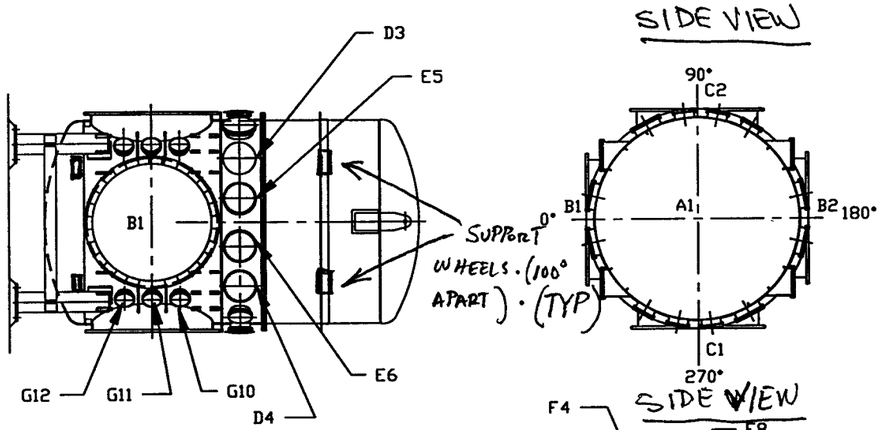

BOTTOM VIEW

SIDE VIEW

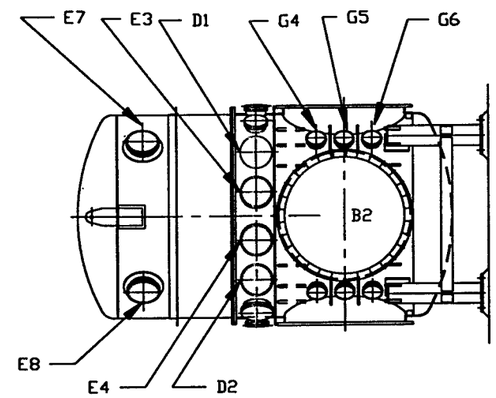

TOP VIEW

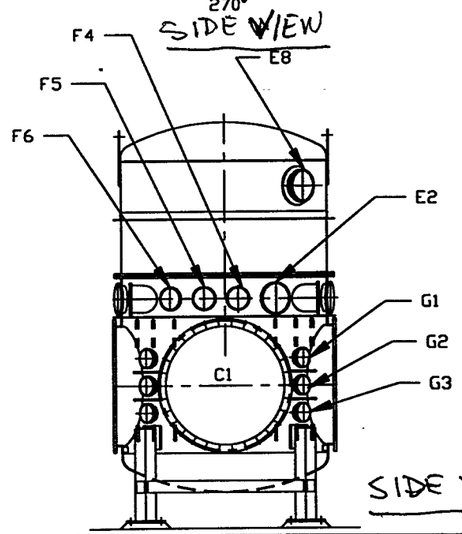

SIDE VIEW

BSC PROTOTYPE PORT DESIGNATIONS

PORT	DESCRIPTION
A1	104" PORT
B1	60" PORT
B2	60" PORT
C1	60" PORT
C2	60" PORT
D1	LIGO SUPPORT BEAMS
D2	LIGO SUPPORT BEAMS
D3	LIGO SUPPORT BEAMS
D4	LIGO SUPPORT BEAMS
E1	RGA/PT PE (VACUUM GAUGES)
E2	ELECTRICAL FEED TE/V1
E3	
E4	
E5	
E6	
E7	
E8	
F1	LN2 TRAP
F2	
F3	10N 500 L/S
F4	TURBO
F5	CLEAN AIR VENT
F6	10N 500 L/S
G1	X
G2	X
G3	X
G4	X
G5	X
G6	X
G7	X
G8	X
G9	X
G10	X
G11	X
G12	X

APR 30 1996

PROPRIETARY AND CONFIDENTIAL

THIS DOCUMENT CONTAINS PROPRIETARY INFORMATION BELONGING TO PROCESS SYSTEMS INTERNATIONAL, INC. OR ITS AFFILIATED COMPANIES AND SHALL BE USED ONLY FOR THE PURPOSE FOR WHICH IT WAS SUPPLIED. IT SHALL NOT BE COPIED, REPRODUCED OR OTHERWISE USED, NOR SHALL SUCH INFORMATION BE FURNISHED IN WHOLE OR IN PART TO OTHERS EXCEPT IN ACCORDANCE WITH THE TERMS OF ANY AGREEMENT UNDER WHICH IT WAS SUPPLIED OR WITH THE PRIOR WRITTEN CONSENT OF PROCESS SYSTEMS INTERNATIONAL, INC. AND SHALL BE RETURNED UPON REQUEST.

DWG. NO.	DESCRIPTION	DWG. NO.	DESCRIPTION

REFERENCE DRAWINGS

EQUIP. THIS DWG.

UNLESS OTHERWISE SPECIFIED
DIMENSIONS ARE IN INCHES
TOLERANCES:
FRACTIONAL ±
ANGULAR: MACH ±0°-30' BEND ±1°
TWO PLACE DECIMAL ± .03
THREE PLACE DECIMAL ± .005
FINISHED SURFACE RMS
BREAK CORNERS IN OUT
REMOVE ALL BURRS

DO NOT SCALE THIS DRAWING

USED ON

NEXT ASS'Y

REV	DESCRIPTION	CHKD	DRWN	DATE	DEOR
P1	PRELIMINARY DESIGN		PV	9.26.95	

ISSUE DESCRIPTION

PROCESS SYSTEMS INTERNATIONAL, INC.
30 WALKUP DR. WESTBOROUGH, MASSACHUSETTS 01581 USA

BSC
PROTOTYPE PORT DESIGNATIIONS

CAD FILE	SIZE	DWG. NO.	REV.
V0494044	D	V049-4-044	P1

SCALE NONE — SHEET 1 OF 1

LIGO-D950231-P1-V