REVISIONS											
LTR	ZONE	DESCRIPTION	DWN	CHK	P-ENG	CONFIG	ME	STRS	MATL	PROJ	QA	RELEASE DATE
A		INITIAL RELEASE									

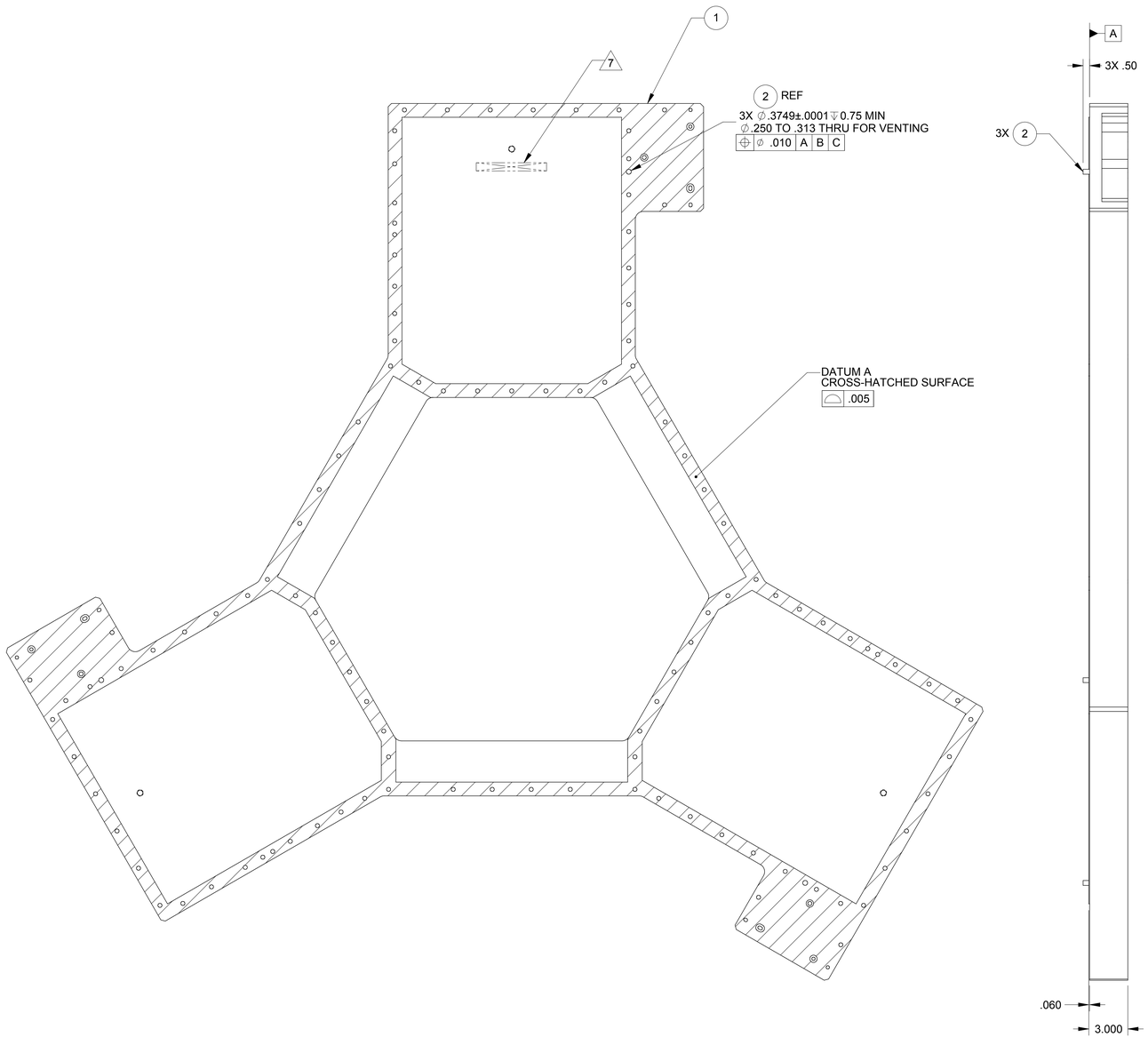

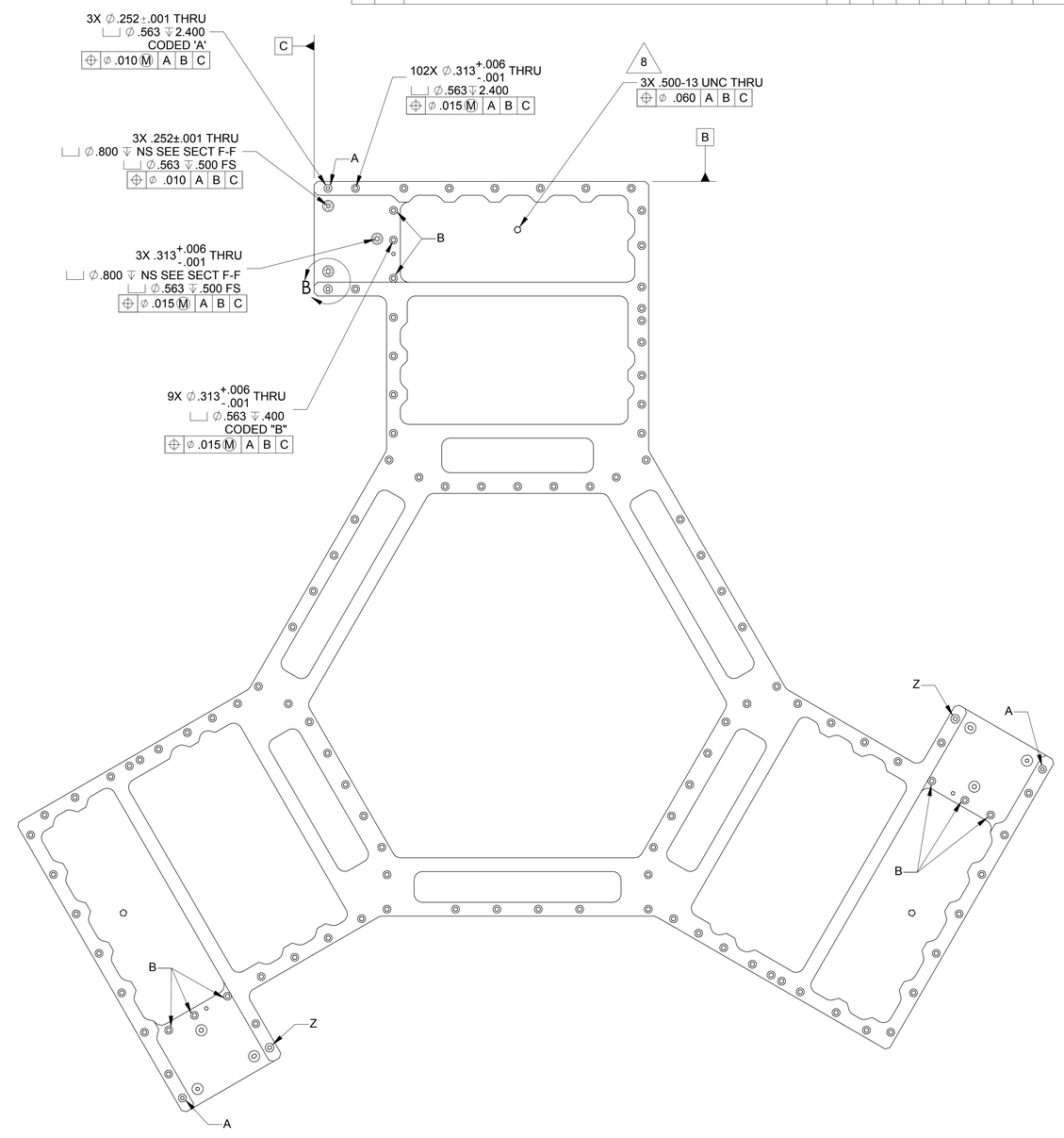

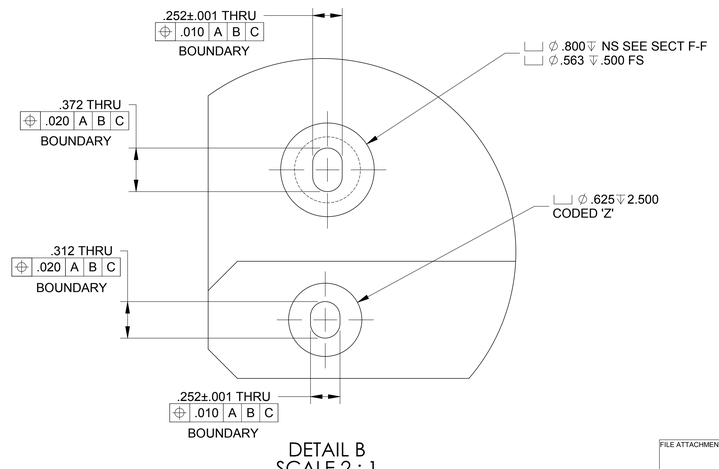

DETAIL B
SCALE 2 : 1
3 PLACES

NOTES: UNLESS OTHERWISE SPECIFIED.

1. ALL PARTS SHALL BE MANUFACTURED IN ACCORDANCE WITH ASI SPECIFICATION 20008225 (LIGO E048225).
2. THIS PART IS TO BE PRODUCED USING THE CAD MODEL. IF THERE ARE DISCREPANCIES BETWEEN THIS DRAWING AND THE MODEL DATABASE THE MODEL DATABASE WILL TAKE PRECEDENCE.
3. PART SHALL BE CHECKED USING THE MODEL DATABASE.
4. SURFACES WITH PROFILE CONTROL ARE LOCATED BASIC WITH RESPECT TO REFERENCED DATUM(S). A SURFACE PROFILE TOLERANCE OF .025 SHALL APPLY TO THE ENTIRE PART UNLESS SPECIFICALLY TOLERANCED ELSEWHERE ON THE DRAWING.
5. REMOVE ALL BURRS AND SHARP EDGES .005-.015.
6. MACHINE FILLET RADII .003-.015.
7. MARK PART AND SERIAL NUMBER IN LOCATION APPROXIMATELY AS SHOWN USING 0.13-INCH HIGH CHARACTERS IN ACCORDANCE WITH 20006686, TYPE I, CLASSES 4, 5, OR 6. SERIAL NUMBERS START AT 001 FOR FIRST PART AND PROCEED CONSECUTIVELY. PARTS TOO SMALL TO MARK SHALL BE IDENTIFIED IN ACCORDANCE WITH 20006686, TYPE II.
8. THREADED HOLES SHALL BE PRODUCED TO A .004-.006 OVERSIZE CONDITION ON THE PITCH DIAMETER BASED ON A 2B CONDITION. THIS DOES NOT APPLY TO THREADED INSERT HOLES.
9. COUNTERSINK 82° ALL TAPPED HOLES TO MAJOR DIAMETER +.015/-.000.
10. COUNTERSINK 82° ALL DRILLED HOLES .015-.030 DEEP BOTH SIDES.
11. RECORD WEIGHT TO NEAREST 0.1 LB ON INSPECTION REPORT AFTER FINAL MACHINING. ESTIMATED WEIGHT IS 232.6 LBS.

THIS DOCUMENT MAY CONTAIN ITAR CONTROLLED INFORMATION AND/OR COMMERCE CONTROLLED INFORMATION EXPORT RESTRICTIONS MAY APPLY

QTY REQD	ITEM NO	REF DES	CAGE NO	PART OR IDENTIFYING NO	NOMENCLATURE OR DESCRIPTION	SPECIFICATION	MATERIAL OR NOTE	ZONE
3	2		3AO54	98380A624	PIN, .3752 DIA, 1.00 L	MCMASTER-CARR	CRES	
1	1			20007835-101	BASE PLATE, STAGE 1	AMS-QQ-A-250/11	AL 6061-T651	
-1								

PARTS LIST

CONTRACT NO

UNLESS OTHERWISE SPECIFIED
DIMENSIONS ARE IN INCHES
TOLERANCES
DECIMALS .XX ±.03 .XXX ±.010
ANGLES ±10'
MACHINE FINISH 125
DO NOT SCALE DRAWING
INTERPRET DWG PER ASME Y14.5M - 1994
MATERIAL
SEE PARTS LIST

RELEASED
10/07/2004

THIS DRAWING IS PRODUCED AND NOT UNDER CONFIGURATION CONTROL UNTIL RELEASED

DWN KEVIN J SPINK 07/12/04
PROJ ENGR
STRS
CHK
MATL
CONFIG
PROJ
ME
QA

ALLIANCE SPACESYSTEMS, INC.
1250 Lincoln Ave., Suite 100
Pasadena, CA 91103

CLOSEOUT PLATE
STAGE 1
LIGO-D047835-A

SIZE	CAGE CODE		REV
E	1KNU9	20007835	A
SCALE 1:4		UNCLASSIFIED	SHEET 1 OF 2

FILE ATTACHMENTS
20007835.x_t

20007825	1388
NEXT ASSEMBLY	PROJECT CODE

APPLICATION

REV 7/04

THIS DRAWING IS PRELIMINARY AND NOT UNDER CONFIGURATION CONTROL UNLESS A REV RELEASED
RELEASED
10/6/2004

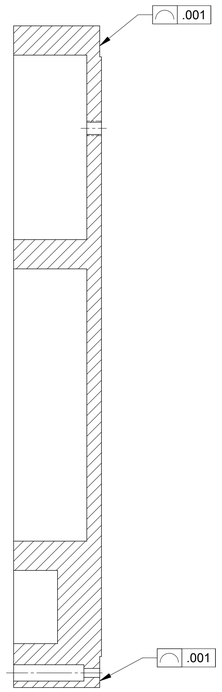

SECTION G-G
SCALE 1 : 2
3 PLACES

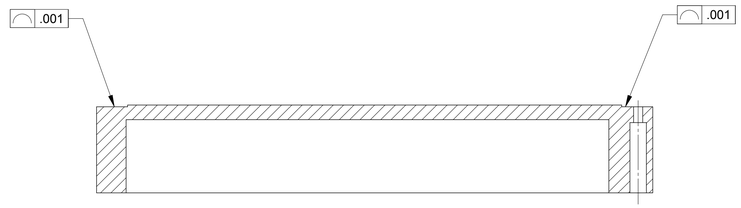

SECTION D-D
SCALE 1 : 2
3 PLACES

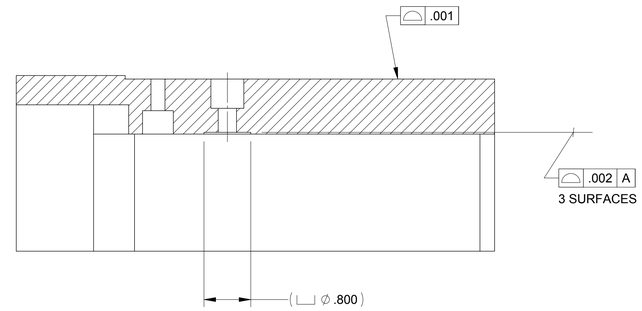

SECTION F-F
SCALE 1 : 1
3 PLACES

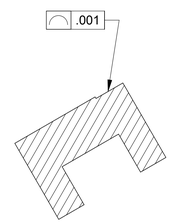

SECTION E-E
SCALE 1 : 2
3 PLACES

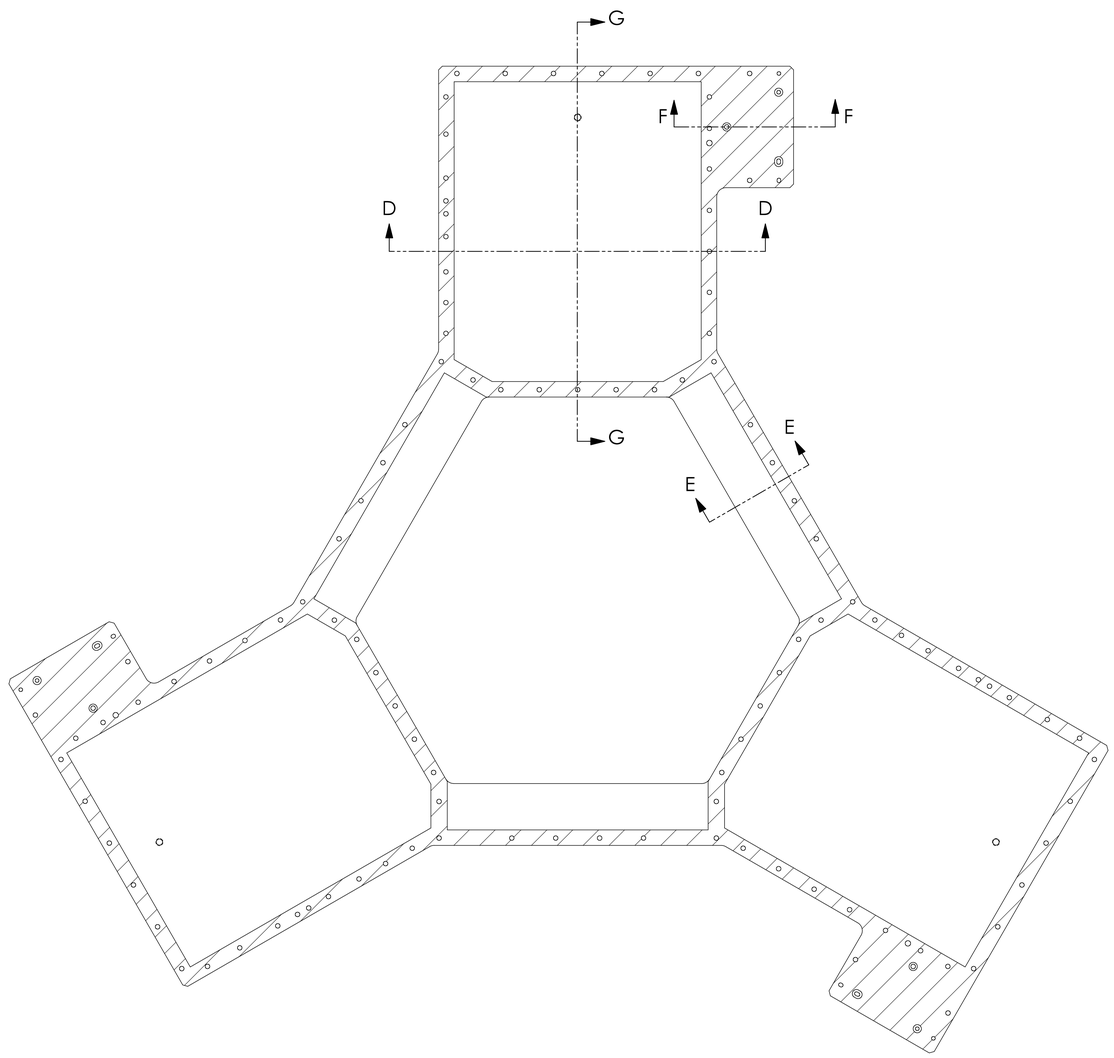

THIS DOCUMENT MAY CONTAIN ITAR CONTROLLED INFORMATION
AND/OR COMMERCE CONTROLLED INFORMATION
EXPORT RESTRICTIONS MAY APPLY

ALLIANCE SPACESYSTEMS, INC.
1250 Lincoln Ave., Suite 100
Pasadena, CA 91103

SIZE	CAGE CODE		REV
E	1KNU9	20007835	A
SCALE 1:4	UNCLASSIFIED	SHEET 2 OF 2	

REV 3/03