REVISIONS											
LTR	ZONE	DESCRIPTION	DWN	CHK	ENGR	STRESS	MATL	THRM	ME	PROJ	QA	RELEASE DATE
A		INITIAL RELEASE										

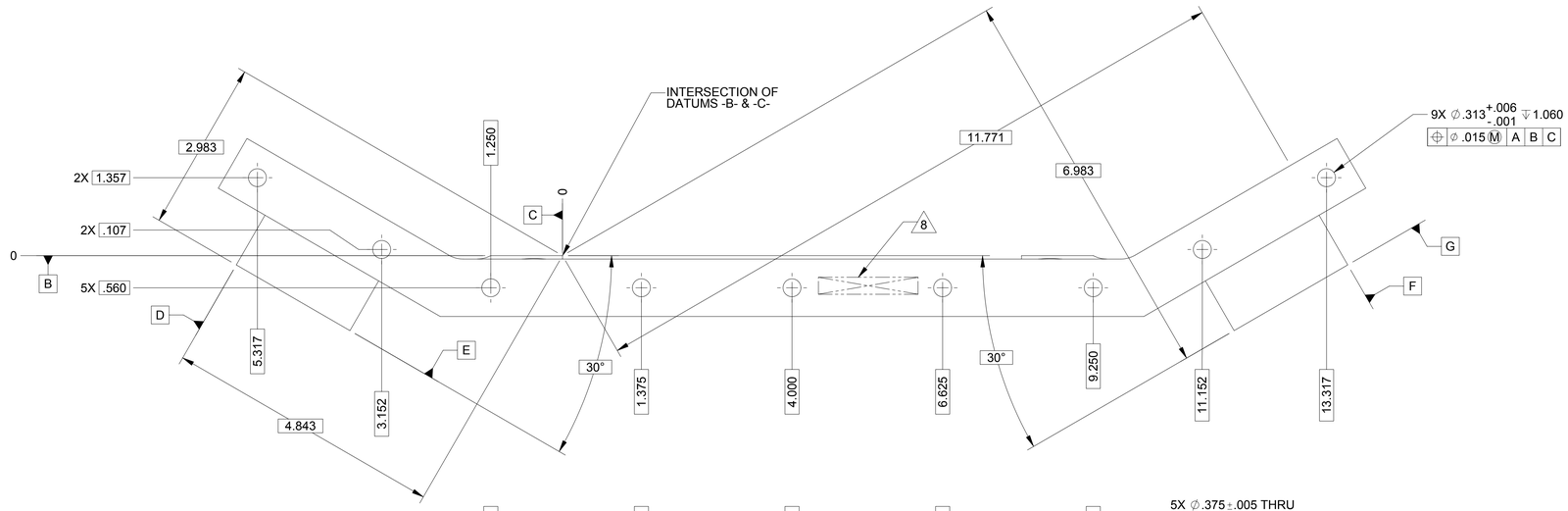

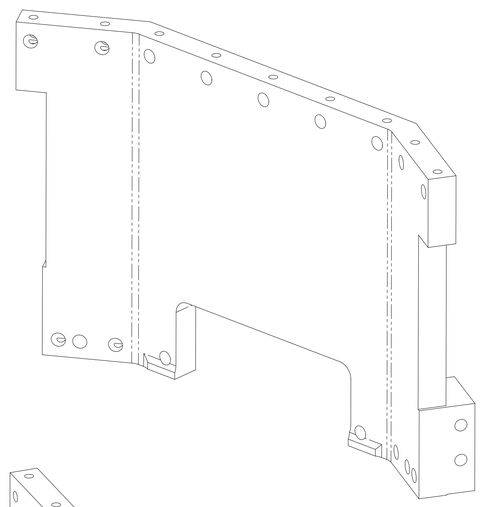

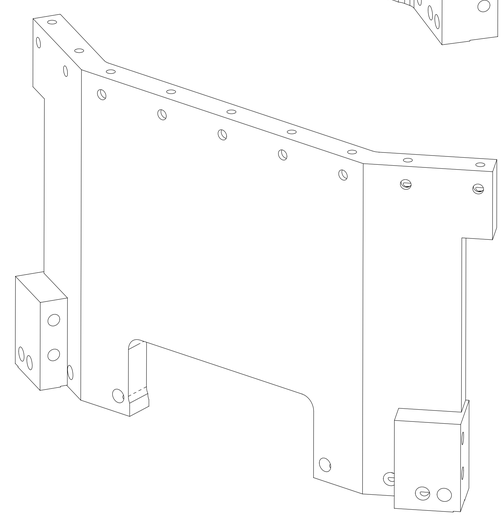

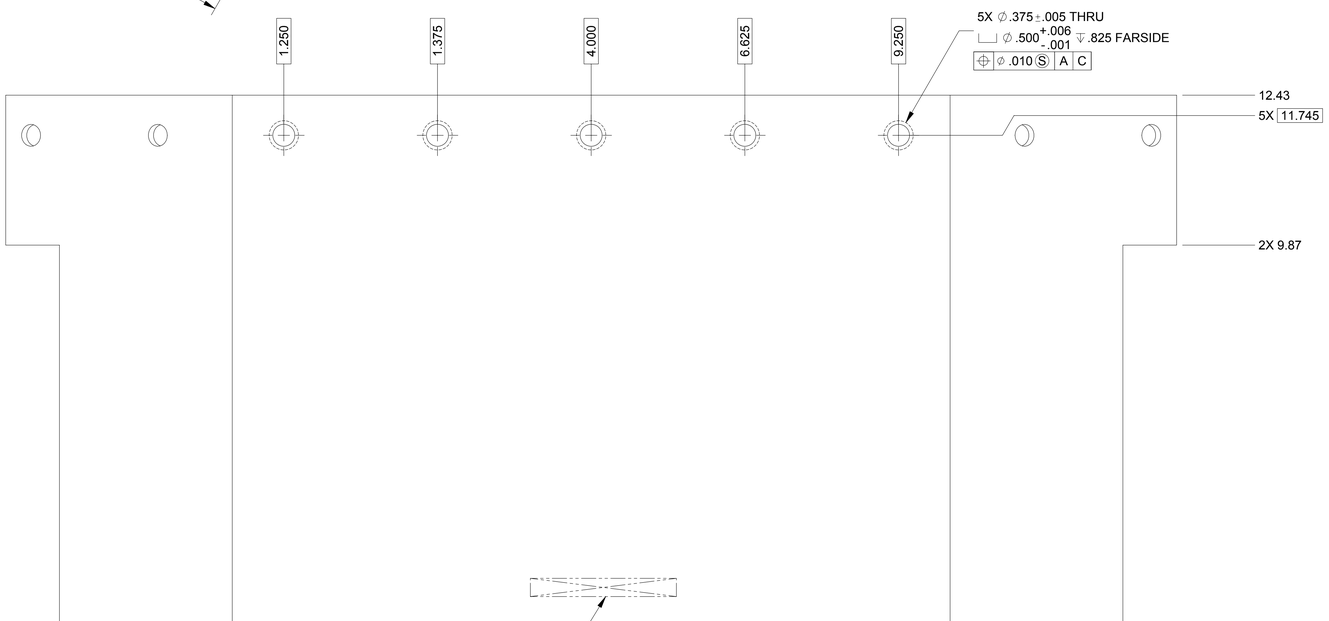

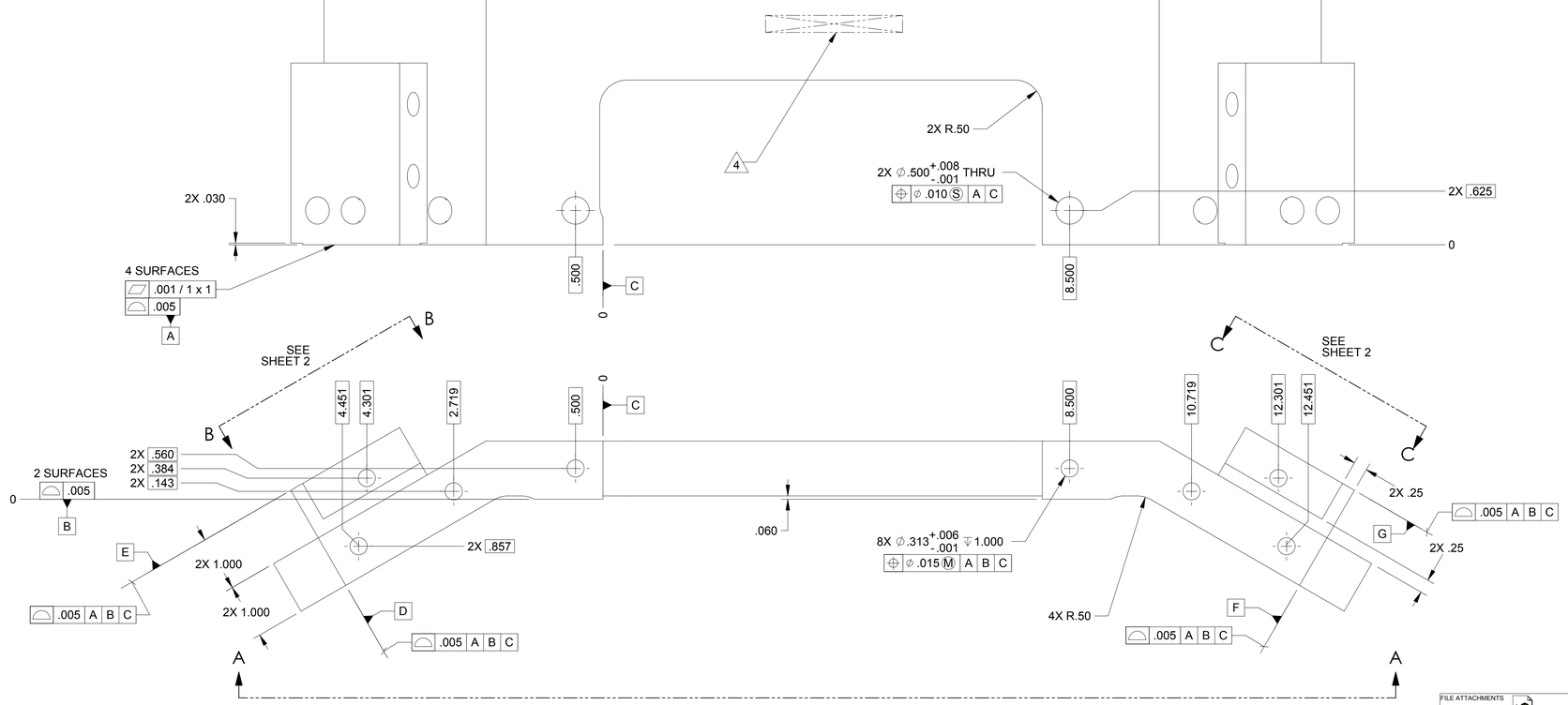

NOTES: UNLESS OTHERWISE SPECIFIED.

1. ALL PARTS SHALL BE MANUFACTURED IN ACCORDANCE WITH ASI SPECIFICATION 20008225 (LIGO E048225).
2. REMOVE ALL BURRS AND SHARP EDGES .005-.015.
3. MACHINE FILLET RADII .003-.015.
4. MARK PART AND SERIAL NUMBER IN LOCATION APPROXIMATELY AS SHOWN USING 0.07-INCH HIGH CHARACTERS IN ACCORDANCE WITH 20006686, TYPE I, CLASSES 4, 5, OR 6. SERIAL NUMBERS START AT 001 FOR FIRST PART AND PROCEED CONSECUTIVELY. PARTS TOO SMALL TO MARK SHALL BE IDENTIFIED IN ACCORDANCE WITH 20006686, TYPE II.
5. COUNTERSINK 82° ALL TAPPED HOLES TO MAJOR DIAMETER +.015/-.000.
6. COUNTERSINK 82° ALL DRILLED HOLES .015-.030 DEEP BOTH SIDES.
7. RECORD WEIGHT TO NEAREST 0.1 LB ON INSPECTION REPORT AFTER FINAL MACHINING. ESTIMATED WEIGHT IS 21.7 LBS.
8. MARK PART NUMBER AND DASH NUMBER WITH THE LETTER P AFTER THE DASH NUMBER IN APPROXIMATE LOCATION SHOWN. USA ANY METHOD THAT WILL NOT RUB OFF OR SMUDGE UNDER NORMAL HANDLING. THIS MARKING DOES NOT NEGATE NOTE 4 AND WILL BE REMOVED DURING SUBSEQUENT OPERATIONS DEPICTED IN DRAWING 20007838.

20007827-1P

QTY REQD	ITEM NO	REF DES	CAGE NO	PART OR IDENTIFYING NO	NOMENCLATURE OR DESCRIPTION	SPECIFICATION	MATERIAL OR NOTE	ZONE

PARTS LIST

CONTRACT NO

NEXT ASSEMBLY	PROJECT CODE
20007838	1388

APPLICATION

UNLESS OTHERWISE SPECIFIED
DIMENSIONS ARE IN INCHES
TOLERANCES
DECIMALS .XX ±.03 .XXX ±.010 ANGLES ±1/2°
MACHINE FINISH 125
DO NOT SCALE DRAWING
INTERPRET DWG PER ASME Y14.5M - 1994

MATERIAL
AL ALY 6061-T651
PER AMS-QQ-A-250/11

RELEASED
THIS DRAWING IS RELEASED AND NOT UNDER CONFIGURATION CONTROL UNTIL RELEASED
JUL 07 2005

DWN KEVIN J SPINK 07/12/04
PROJ ENGR
STRS
CHK
MATL
CONFIG
PROJ
ME
QA

ALLIANCE SPACESYSTEMS, INC.
1250 Lincoln Ave., Suite 100
Pasadena, CA 91103

ANGLED HEX WALL
STAGE 1
LIGO-D047827-A

SIZE	CAGE CODE		REV
E	1KNU9	20007827	A
SCALE 1:2		UNCLASSIFIED	SHEET 1 OF 2

REV 7/04

FILE ATTACHMENTS
20007827.x_t

THIS DOCUMENT MAY CONTAIN ITAR CONTROLLED INFORMATION AND/OR COMMERCE CONTROLLED INFORMATION
EXPORT RESTRICTIONS MAY APPLY

RELEASED
THIS DRAWING IS RELEASED AND NOT UNDER CONFIGURATION CONTROL UNLESS A CRD RELEASED
11/17/2005

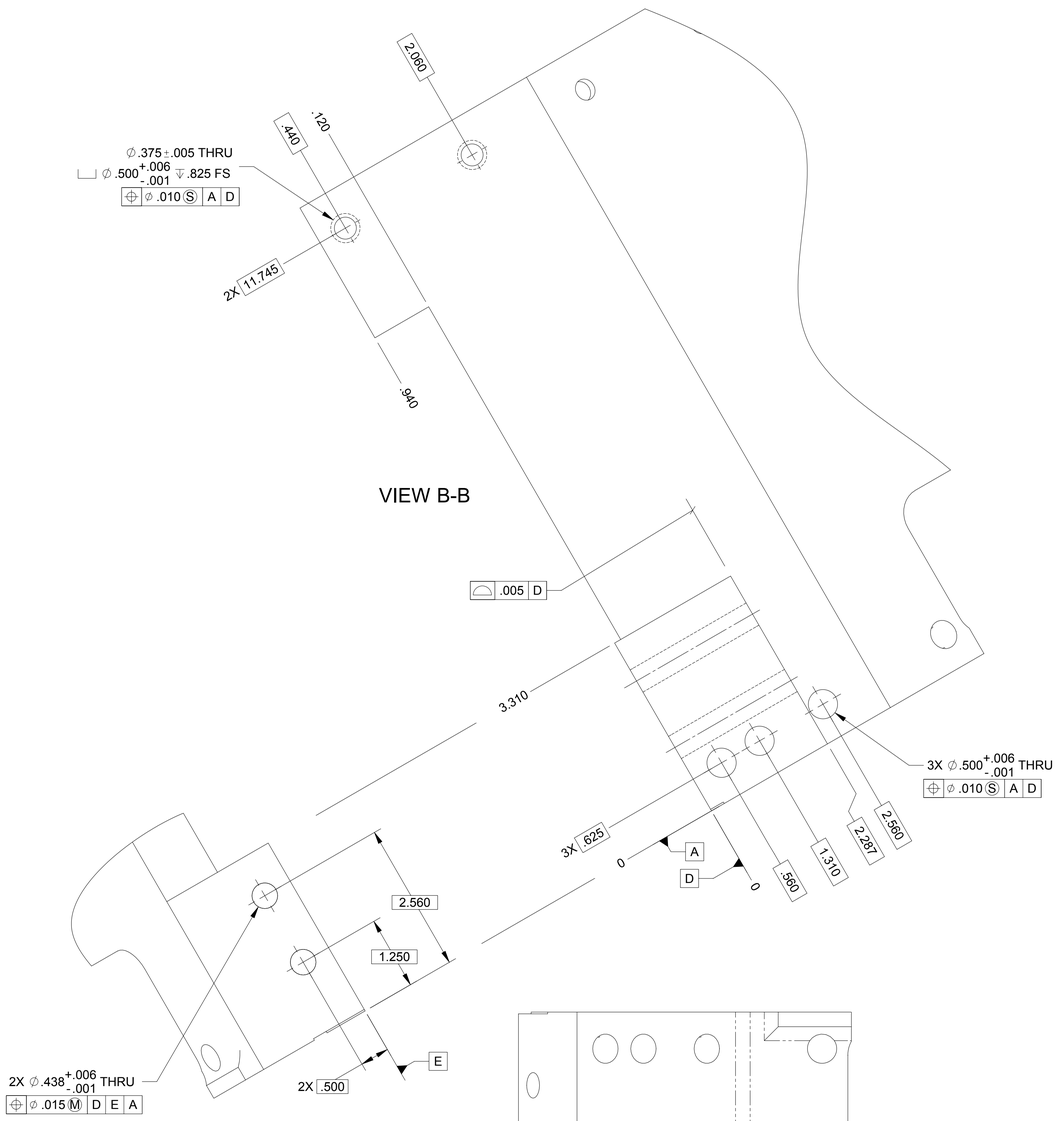

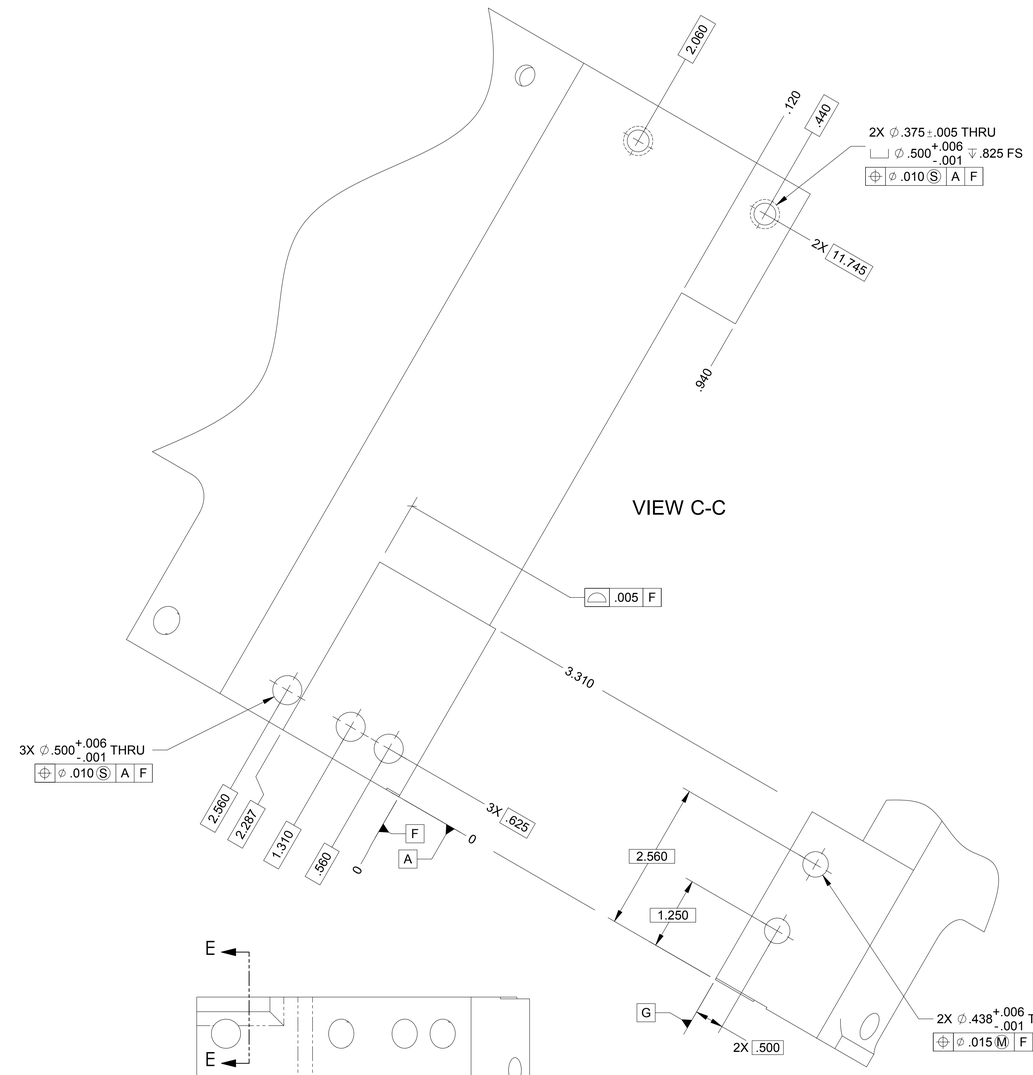

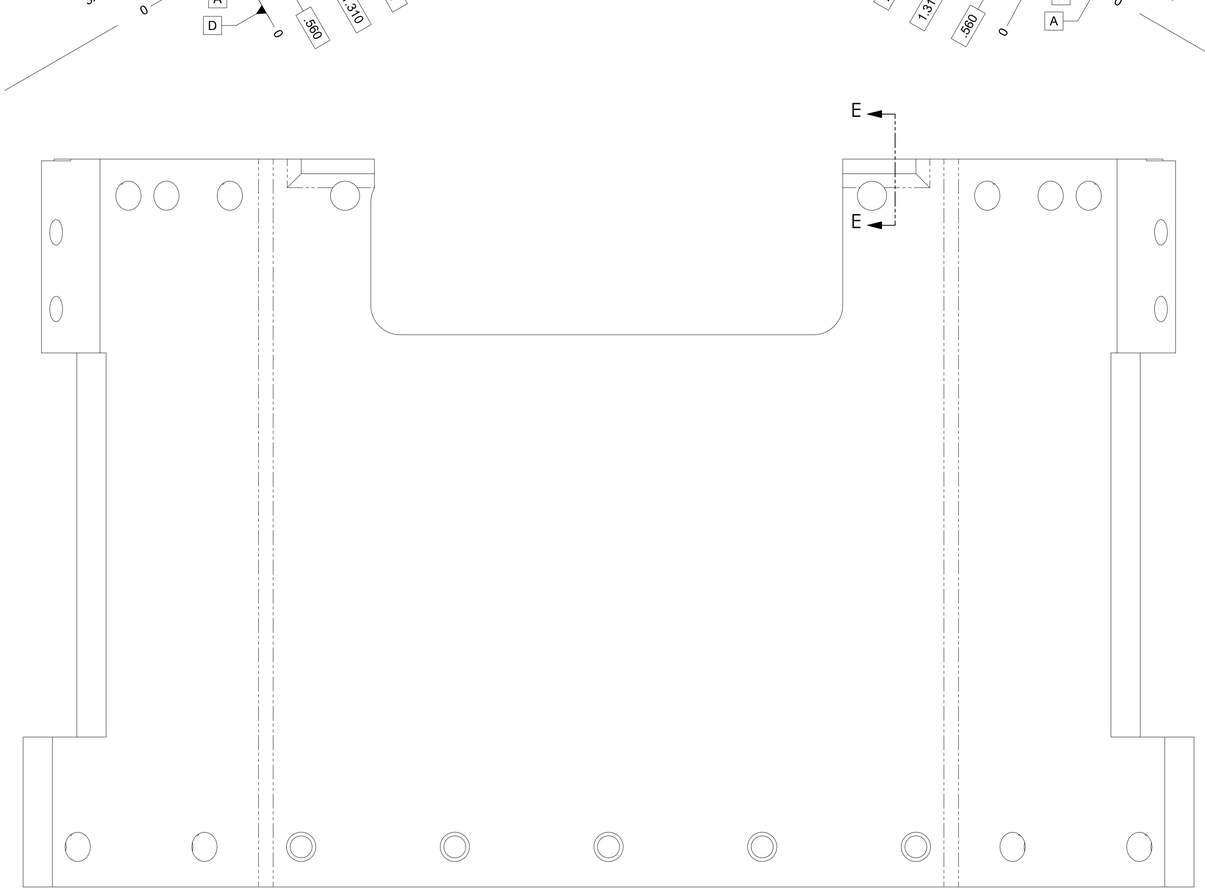

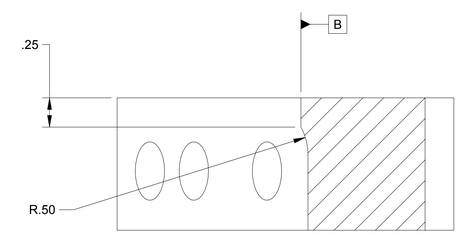

SECTION E-E
SCALE 2 : 1
TYP 2 PLACES

THIS DOCUMENT MAY CONTAIN ITAR CONTROLLED INFORMATION
AND/OR COMMERCE CONTROLLED INFORMATION
EXPORT RESTRICTIONS MAY APPLY

ALLIANCE SPACESYSTEMS, INC.
1250 Lincoln Ave., Suite 100
Pasadena, CA 91103

SIZE	CAGE CODE		REV
E	1KNU9	20007827	A
SCALE 1:2	UNCLASSIFIED	SHEET 2 OF 2	

REV 3/03