REFER TO DCN # E040217-00-D

NOTES: (UNLESS OTHERWISE SPECIFIED)

REV.	DATE	DCN #	DRAWING TREE #

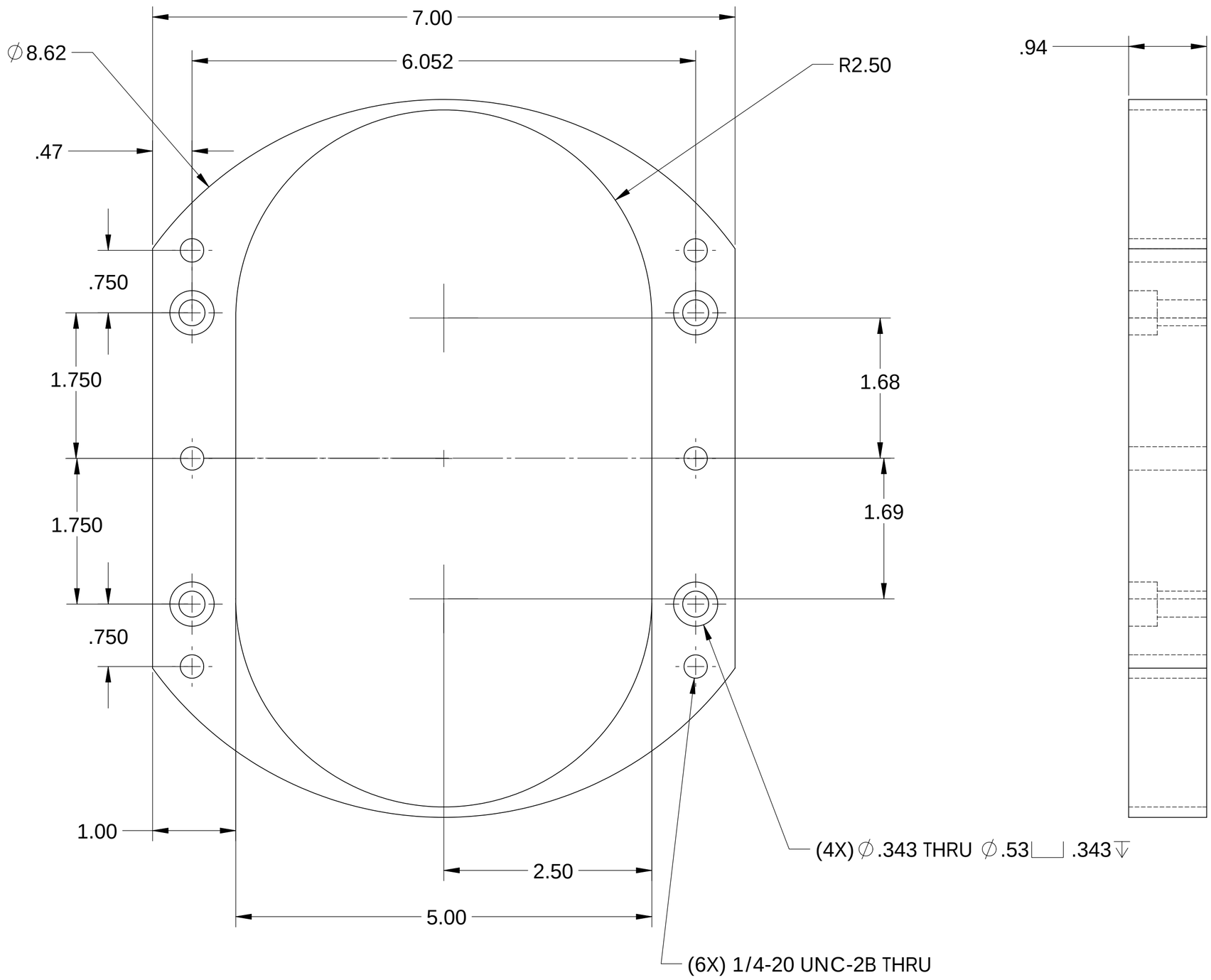

ITEM NO.	REQ.	SPARE	TOT.	PART NUMBER	DESCRIPTION	SUPPLIER
	QUANTITY					

PARTS LIST

UNLESS OTHERWISE SPECIFIED:
DIMENSIONS ARE IN INCHES
TOLERANCES:
.XX ± .01
.XXX ± .005
ANGULAR ± 1 DEG

MATERIAL: 6061-T6 AL
FINISH: CLEAR ANODIZE

		DATE	NAME
DRAWN	KMASON	1/8/04	
CHECKED			

COMMENTS:

LIGO — CALIFORNIA INSTITUTE OF TECHNOLOGY
MASSACHUSETTS INSTITUTE OF TECHNOLOGY

SYSTEM
SUB-SYSTEM
NEXT ASSY: LASER THERMAL COMPENSATOR
PART NAME: VIEWPORT ADAPTER

SIZE: C
DWG. NO.: D040010-A-D
REV: A
SCALE:
SHEET 1 OF 1

FILE NAME/LOCATION: