NOTES: (UNLESS OTHERWISE SPECIFIED)

REV.	DATE	DCN #	DRAWING TREE #
A	-	-	-

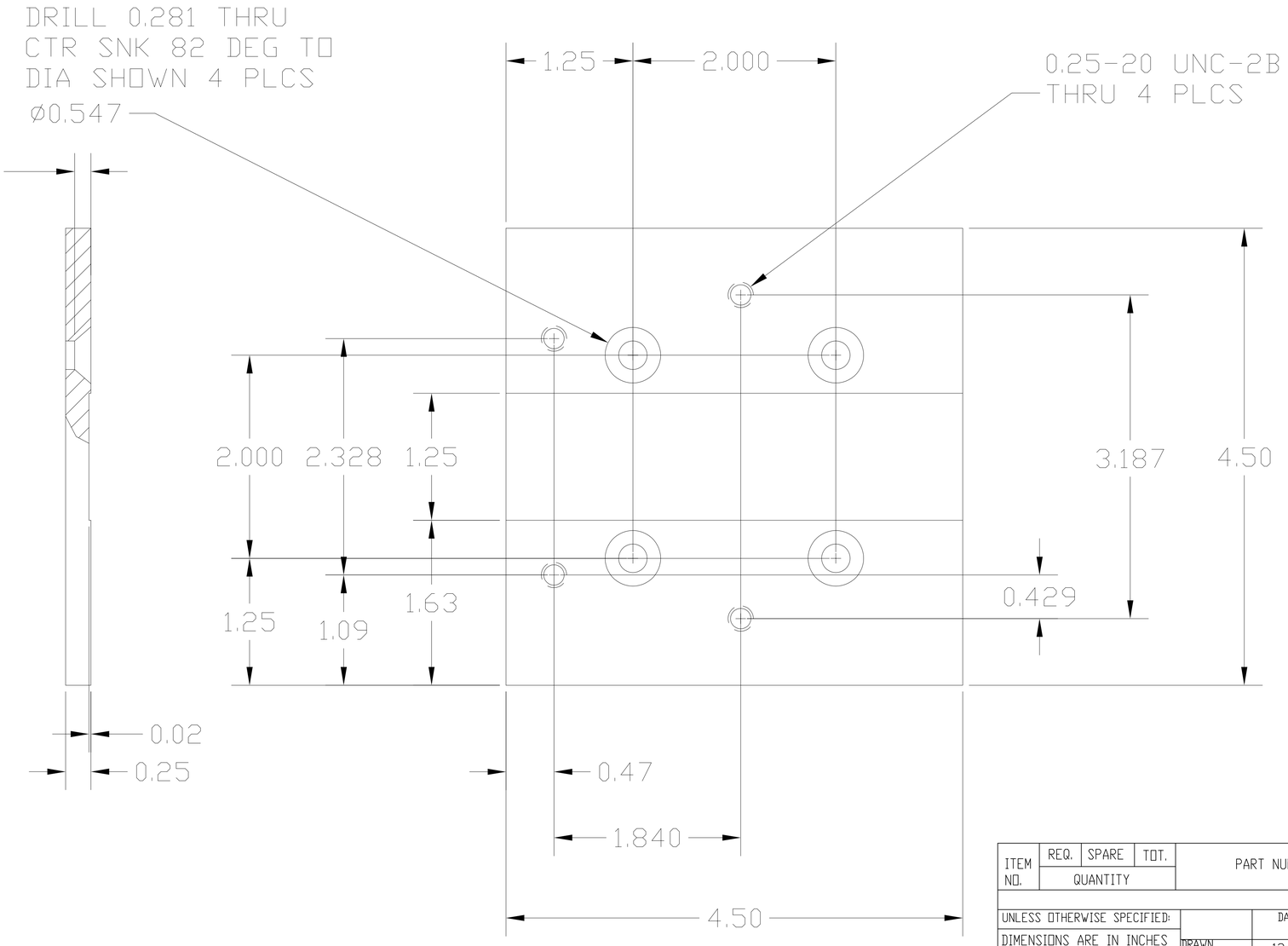

ITEM NO.	REQ.	SPARE	TOT.	PART NUMBER	DESCRIPTION	SUPPLIER
	QUANTITY					

PARTS LIST

UNLESS OTHERWISE SPECIFIED:

DIMENSIONS ARE IN INCHES

TOLERANCES:
.XX ± 0.01
.XXX ± 0.005
ANGULAR:
X ± 1 DEG
X.X ± 0.2 DEG

MATERIAL:
ALUM 6061-T6

FINISH:
BLACK ANODIZE

	DATE	NAME
DRAWN	12-6-03	M.R. SMITH
CHECKED		

COMMENTS:
BREAK CORNERS AND EDGES
REMOVE ALL BURRS

CALIFORNIA INSTITUTE OF TECHNOLOGY
MASSACHUSETTS INSTITUTE OF TECHNOLOGY

THERMAL COMPENSATION

CO2 LASER MASK PROJECTOR

BACKING PLATE 4.5 IN

SIZE B | DWG. NO. D030804-01-D | REV 01

SCALE: | SHEET 1 OF 1

\LIGO II\Thermal comp\CO2_TEL\co2telescope.dwg