NOTES: (UNLESS OTHERWISE SPECIFIED)

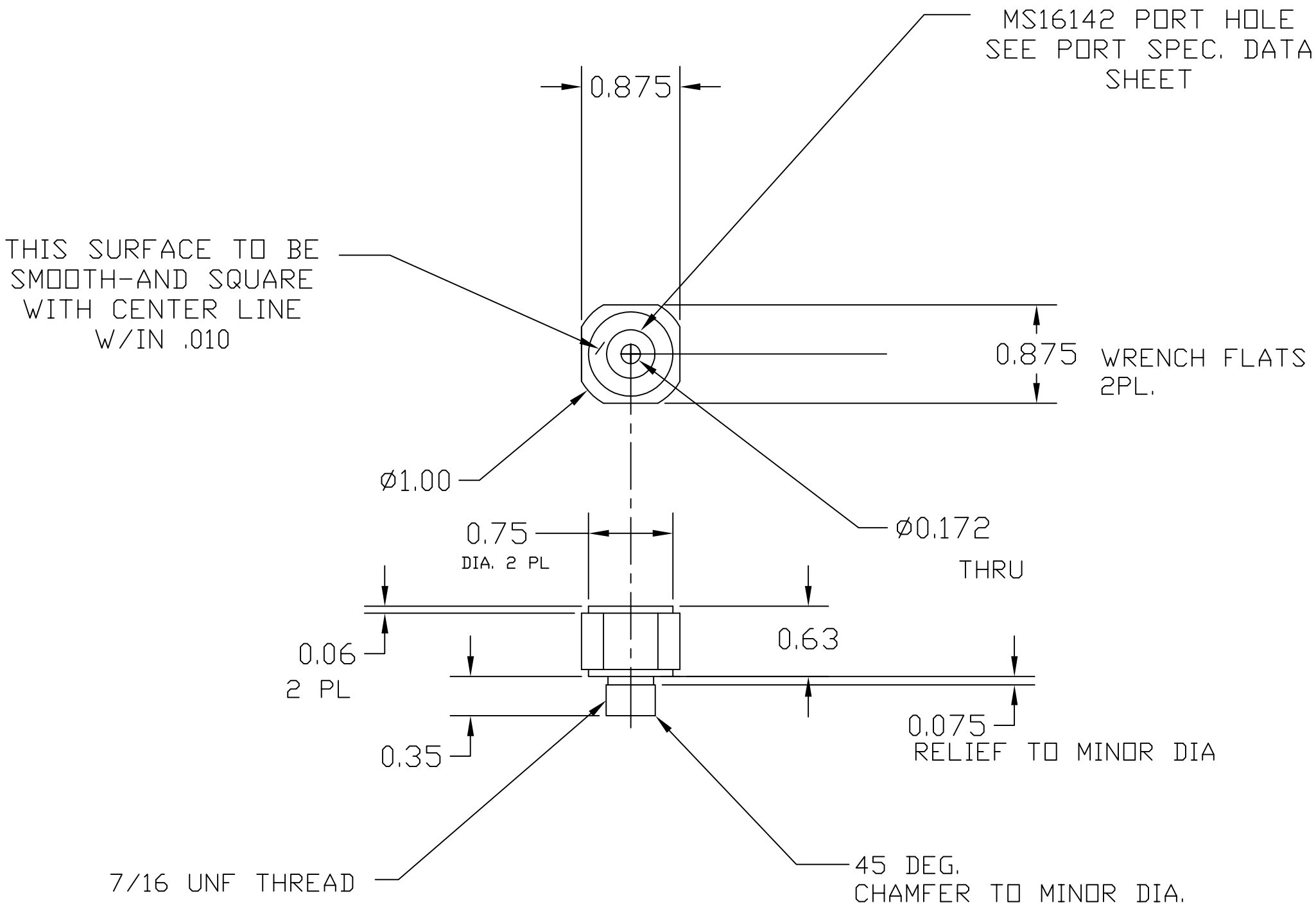

MAKE 10 TOTAL

REF	QTY	PART or DRWG No.	DESCRIPTION	MATERIAL

PARTS and MATERIAL LIST

UNLESS OTHERWISE SPECIFIED
DIMENSIONS ARE IN INCHES

TOLERANCES:
FRACTIONAL ± 1/16
ANGULAR ± .25°
~~ANGULARMACH & BEND ±~~
TWO PLACE DECIMAL ± .01
THREE PLACE DECIMAL ± .005
FINISHED SURFACE RMS 63
BREAK CORNERS IN: .015 OUT: .015
REMOVE ALL BURRS

DWG. NO.	DESCRIPTION
XXX	XXX

REFERENCE DRAWINGS

MATERIAL: BLK DELRIN
HEAT TREAT:
FINISH:

USED ON: XXX
NEXT ASS'Y: XXX

REV	DESCRIPTION	DCN NUMBER		APPR'D	CHECK	DRWN	DATE
A	NEW-RELEASE	LIGO-E020807-00-R				KENM	8-12-02

ISSUE DESCRIPTION

LIGO CALIFORNIA INSTITUTE OF TECHNOLOGY
MASSACHUSETTS INSTITUTE OF TECHNOLOGY

ADAPTOR,
SENSOR
INSOLATING

CAD FILE: D020430-A
SIZE: D
DWG. NO.: D020430-A
SCALE: 1 : 1
SHEET: 1 OF 1