NOTES: (UNLESS OTHERWISE SPECIFIED)

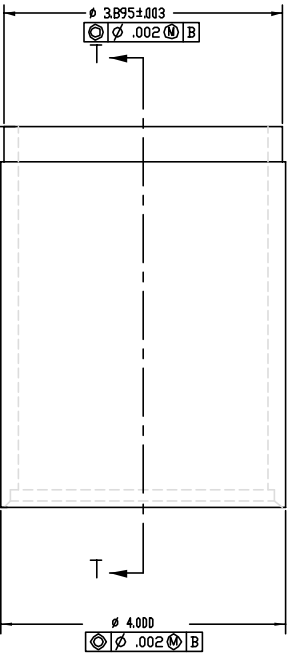

Top Bellow Slug
D020291-1
(1) required
per ass'y

SECTION T-T

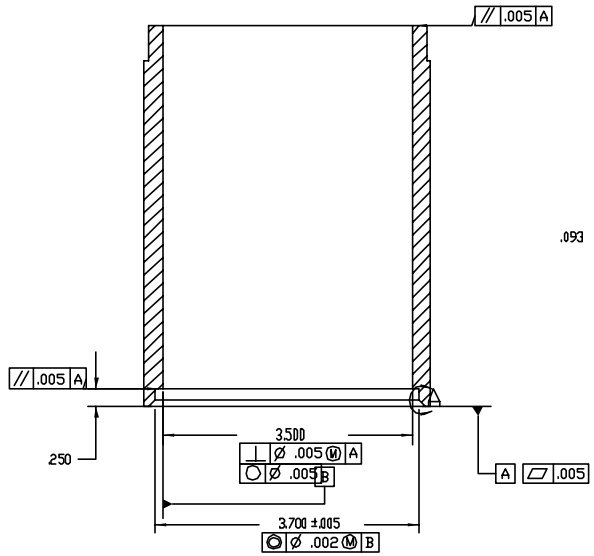

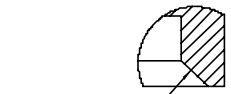

DETAIL A
SCALE 4 : 1

DETAIL AD
SCALE 4 : 1

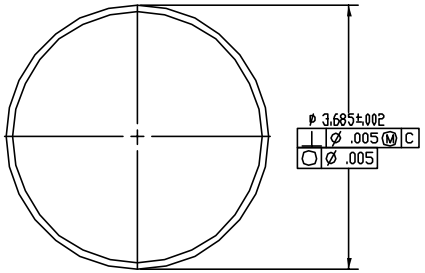

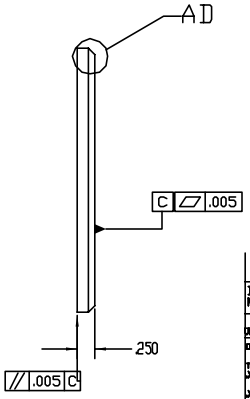

Top Bellow Cap
D020291-2
(1) required
per ass'y

ITEM NO.	REQ.	SPARE	TOT. QUANTITY	PART NUMBER	DESCRIPTION	SUPPLIER
1						

PARTS LIST

UNLESS OTHERWISE SPECIFIED
DIMENSIONS ARE IN INCHES
TOLERANCES
.XX ± 0.02"
.XXX ± 0.005"
MATERIAL 304 L

	DATE	NAME
DRAWN		4/99
REVIEWED	5/19/99	
CHECKED	5/17/02	

CALIFORNIA INSTITUTE OF TECHNOLOGY
MASSACHUSETTS INSTITUTE OF TECHNOLOGY

LIGO

SUB-SYSTEM HEPI

NEXT ASSY

PART NAME Top Bellow Slug & Cap

SIZE C DWG. NO. D020291-01-E REV

SCALE SHEET 17 OF 38

FILE NAME/LOCATION

1 Required for each actuator