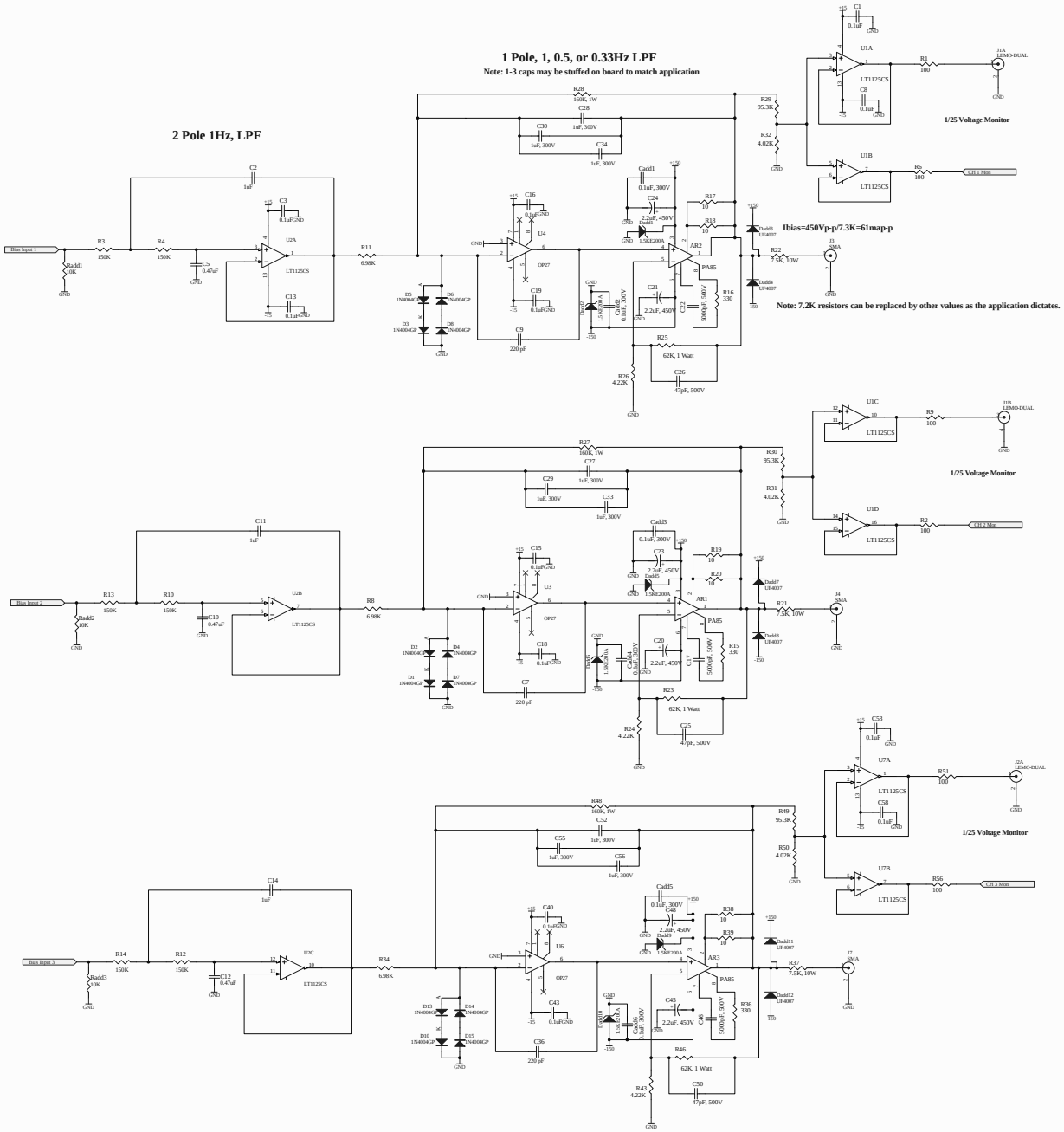

Title: *LOS Bias Module*		LIGO Laboratory, California Institute of Technology, Massachusetts Institute of Technology	LIGO
Size: D	DCC Number: D000341	SCH / PCB Revision: A4	Engineer: P. Hefner
File: C:\Documents and Settings\pjr\Desktop\LOSBiasModuleRevA3\LOSBiasModule1.Sch			Date: 8/3/2005
			Time: 8:43:13 AM
			Sheet 1 of 2

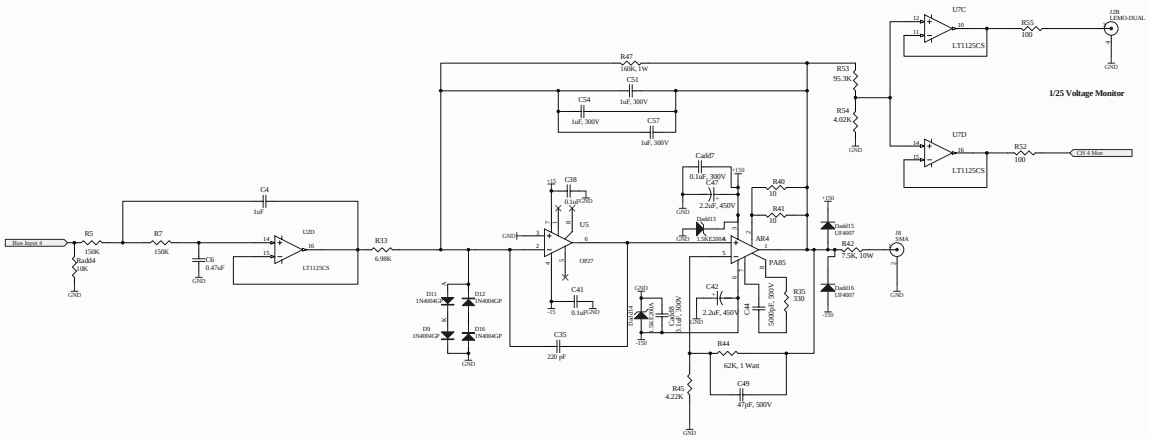

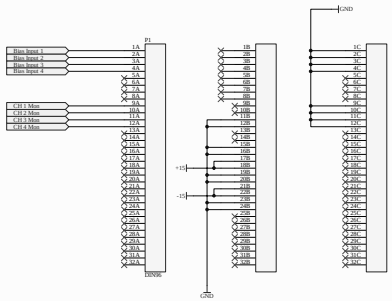

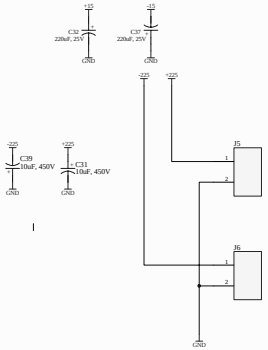

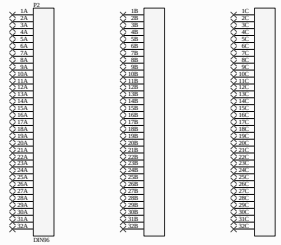

Rev	Description	Date
A	Initial Release	11/00
A1	1. Changed LT1028 to OP27 2. Changed C25, C26, C49, C50 to 47pF, 500V	7/01
A2	Added Radd1, Radd2, Radd3, Radd4 to terminate baord bias inputs.	4/04
A3	DCN E050154-00 changes the compensation components on the PA-85 driver stages from 47pF/10 ohms to 5000pF/330 ohms to cure an observed oscillation in the 7 to 8 MHz band	6/05
A4	Added Dadd1 through Dadd16 and Cadd1 through Cadd8 for PA85 protection. DCN E050202 -00-C	8/05

Title: ***LOS Bias Module***

LIGO Laboratory
California Institute of Technology
Massachusetts Institute of Technology

LIGO

Size: D	DCC Number: D000341	SCH / PCB Revision: A4	Engineer: P. Hefner	Date: 8/3/2005
File: C:\Documents and Settings\pir\Desktop\LOSBiasModuleRevA3\LOSBiasModule2.Sch				Time: 8:43:13 AM
				Sheet 2 of 2