REV.	DATE	DCN #	DRAWING TREE #
v1	07 JAN 2011	-	-
v2	09 FEB 2011	E1100099	-
-	-	-	-

NOTES CONTINUED:

5. SCRIBE, ENGRAVE, LASER MARK OR MECHANICALLY STAMP (NO DYES OR INKS) A UNIQUE THREE DIGIT SERIAL NUMBER & REVISION NUMBER ON EACH PART. SERIAL NUMBERS START AT 001 FOR THE FIRST ARTICLE AND PROCEED CONSECUTIVELY. BAG AND TAG PARTS WITH THEIR DRAWING PART NUMBER, REVISION, VARIANT OR "TYPE" (IF APPLICABLE), AND QUANTITY. IF PARTS ARE TOO SMALL TO SCRIBE, BAGGING AND TAGGING ALONE IS SUFFICIENT.
   EXAMPLE (PART): 001-v1
   EXAMPLE (TAG): DXXXXXXX-VY, TYPE-XX, QTY: TBD

6. VICTREX 450G. VIRGIN PEEK RESIN. NO OTHER ADDITIVES.

7. APPROXIMATE WEIGHT = .0005 LBS.

8. MACHINE ALL SURFACES TO REMOVE OXIDES AND MILL FINISH, USE OF ABRASIVE REMOVAL TECHNIQUES IS NOT ALLOWED. REFER TO LIGO-E0900364

9. ALL MATERIAL IS TO BE VIRGIN MATERIAL (i.e. NO WELD REPAIRS, PLUGS OR RECYCLED MATERIAL). NO REPAIRS SHALL BE MADE UNLESS APPROVED IN ADVANCE, AND IN WRITING, BY LIGO LABORATORY. REFER TO LIGO-E0900364.

10. SURFACE FINISH TO BE AS-PROCESSED FROM MILL/SUPPLIER, FREE FROM SCRATCHES OR GOUGES.

11. MUST BE MACHINED DRY. NO COOLENENT, OILS, CUTTING FLUIDS. ALL TOOLS AND WORKHOLDINGS MUST BE CLEANED WITH SOLVENT TO PREVENT CONTACT WITH OILS AND CUTTING FLUIDS.

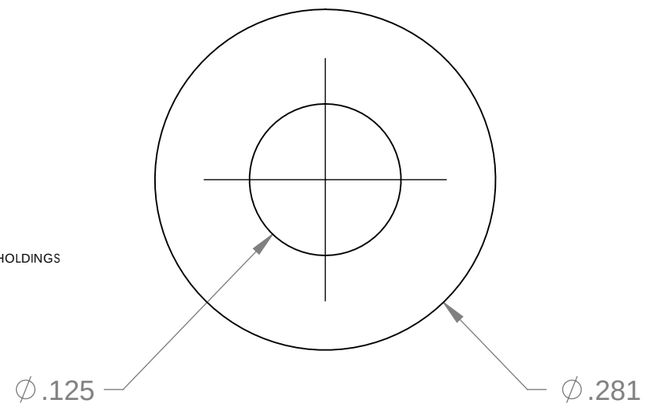

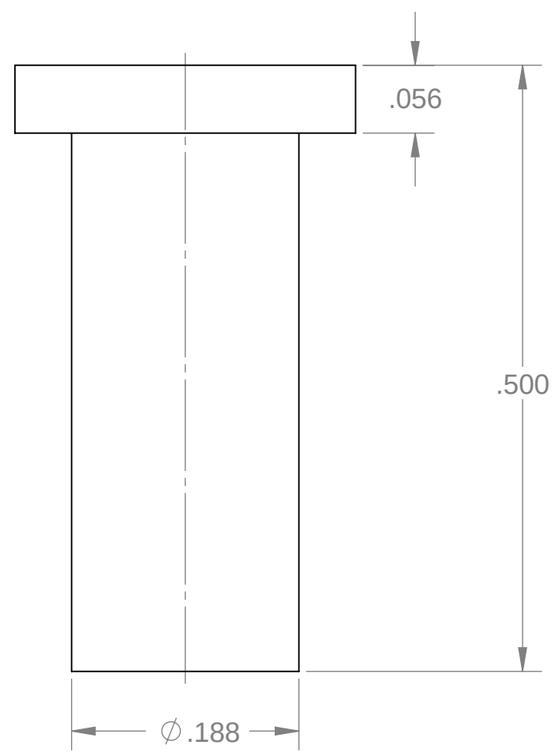

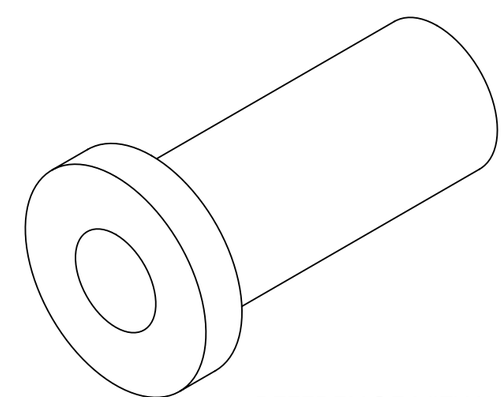

REFERENCE VIEW
SCALE: NONE

NOTES AND TOLERANCES: (UNLESS OTHERWISE SPECIFIED)

DIMENSIONS ARE IN INCHES

TOLERANCES:
.XX ± .05
.XXX ± .005

ANGULAR ± 0.5°

1. INTERPRET DRAWING PER ASME Y14.5-1994.
2. REMOVE ALL SHARP EDGES, .005-.015. FOR MACHINED PARTS. ROUND ALL EDGES APPROXIMATLEY R.02 FOR SHEET METAL PARTS.
3. DO NOT SCALE FROM DRAWING.
4. MACHINE DRY. NO FLUIDS SHALL BE USED.

MATERIAL: PEEK 6

FINISH: 63 σinch

LIGO — CALIFORNIA INSTITUTE OF TECHNOLOGY, MASSACHUSETTS INSTITUTE OF TECHNOLOGY

SYSTEM: ADVANCED LIGO

SUB-SYSTEM: SYS

NEXT ASSY: D1001346

PART NAME: aLIGO, CABLE BRACKET SCREW INSULATOR

DESIGNER	J. DAVIS	25 MAY 2010
DRAFTER	J. DAVIS	31 MAY 2010
CHECKER	S.SHANKLE	09 FEB 2011
APPROVAL		

SIZE: B

DWG. NO.: D1001344

REV.: v2

SCALE: 8:1

PROJECTION:

SHEET 1 OF 1

D1001344 - aLIGO, CABLE BRACKET, SCREW INSULATOR, PART PDM REV: X-008, DRAWING PDM REV: X-001