REV.	DATE	DCN #	DRAWING TREE #
v1	01 Mar. 2010	E1000115	E1000025
v2	20 July 2010	E1000263	E1000025
v3	19 Aug 2010	E1000339	E1000025

NOTES CONTINUED:

5. SCRIBE, ENGRAVE, OR MECHANICALLY STAMP (NO INKS OR DYES) DRAWING PART NUMBER, REVISION (AND VARIENT OR "TYPE" IF APPLICABLE ON NOTED SURFACE OF PART FOLLOWED ON THE NEXT LINE WITH A THREE DIGIT SERIAL NUMBER. SERIAL NUMBERS START AT 001 FOR THE FIRST ARTICLE AND PROCEED CONSECUTIVELY. USE MINIMUM 0.12 HIGH CHARACTERS, UNLESS THE SIZE OF THE PART DICTATES SMALLER CHARACTERS. A VIBRATORY TOOL MAY BE USED. EXAMPLE DXXXXXXX-VY, TYPE-XX, S/N XXX.
6. APPROXIMATE WEIGHT = 1.1 LB.
7. MACHINE ALL SURFACES TO REMOVE OXIDES AND MILL FINISH, USE OF ABRASIVE REMOVAL TECHNIQUES IS NOT ALLOWED.
8. ALL PARTS SHALL BE MANUFACTURED IN ACCORDANCE WITH LIGO SPECIFICATION E0900364.
9. ALL THREADED INSERTS TO BE INSTALLED BY LIGO PERSONNEL, AFTER DELIVERY OF FINSIHED PARTS, USE NITRONIC 60 THREADED INSERTS.
10. A TAPPED HOLE PITCH DIAMETER LIMIT OF H11 APPLIES.
11. A TRUE POSITION TOLERANCE OF ∅.010 IS ~ THE SAME AS A CONVENTIONAL TOLERANCE OF ±.005.

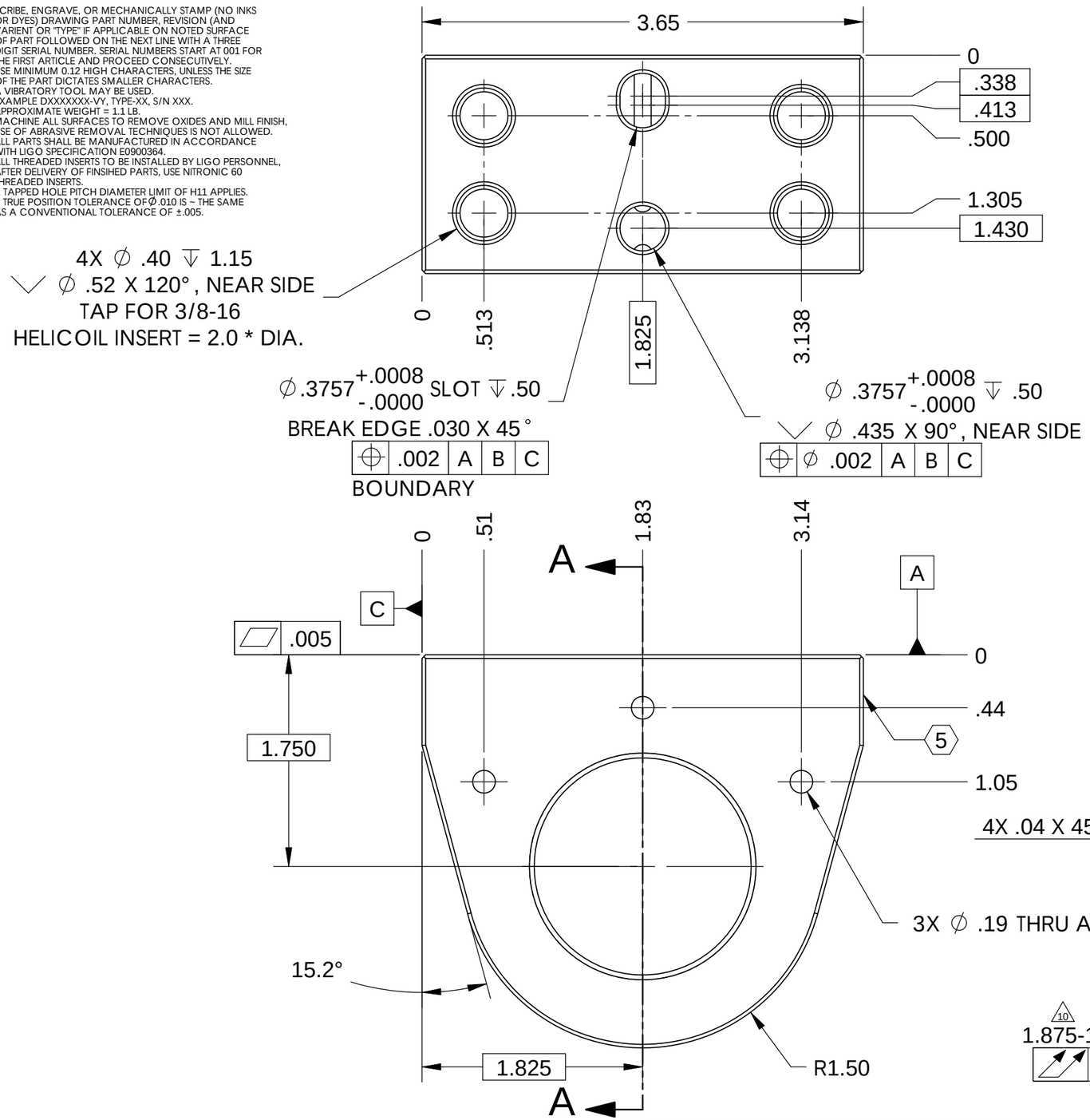

SECTION A-A

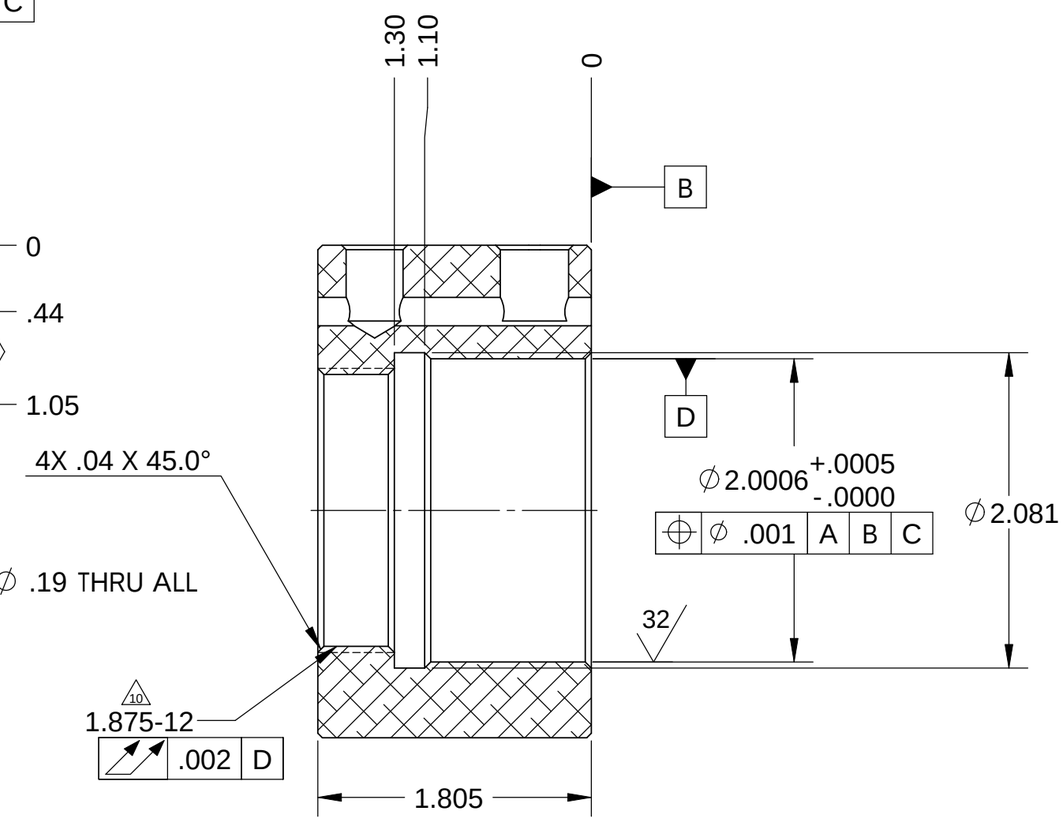

NOTES AND TOLERANCES: (UNLESS OTHERWISE SPECIFIED)

DIMENSIONS ARE IN INCHES

TOLERANCES:
.XX ± .015
.XXX ± .005

ANGULAR ± .5°

1. INTERPRET DRAWING PER ASME Y14.5-1994.
2. REMOVE ALL SHARP EDGES, R.02 MIN.
3. DO NOT SCALE FROM DRAWING.
4. ALL MACHINING FLUIDS MUST BE FULLY SYNTHETIC, FULLY WATER SOLUBLE AND FREE OF SULFUR, SILICONE, AND CHLORINE.

MATERIAL: 2024-T351 Al
FINISH: 63 µinch

LIGO — CALIFORNIA INSTITUTE OF TECHNOLOGY / MASSACHUSETTS INSTITUTE OF TECHNOLOGY

SYSTEM: ADVANCED LIGO
SUB-SYSTEM: SEI
NEXT ASSY: D1000854, D1000855

PART NAME: HOUSING LOCKER SLEEVE, aLIGO BSC ISI

DESIGNER	A.STEIN	01 Mar. 2010	
DRAFTER	M.HILLARD	01 Mar. 2010	
CHECKER	F.MATICHARD	01 Mar. 2010	
APPROVAL	K.MASON	01 Mar. 2010	

SIZE: B
DWG. NO.: D1000908
REV.: v3
SCALE: 1:1
PROJECTION:
SHEET 1 OF 1

D1000908 HOUSING LOCKER SLEEVE, aLIGO BSC ISI, PART PDM REV: X-008, DRAWING PDM REV: X-009