REV.	DATE	DCN #	DRAWING TREE #
v1	01 Mar. 2010	E1000115	E1000025

NOTES CONTINUED:

(5) SCRIBE, ENGRAVE, OR MECHANICALLY STAMP (NO INKS OR DYES) DRAWING PART NUMBER, REVISION (AND VARIENT OR "TYPE" IF APPLICABLE ON NOTED SURFACE OF PART FOLLOWED ON THE NEXT LINE WITH A THREE DIGIT SERIAL NUMBER. SERIAL NUMBERS START AT 001 FOR THE FIRST ARTICLE AND PROCEED CONSECUTIVELY. USE MINIMUM 0.12 HIGH CHARACTERS, UNLESS THE SIZE OF THE PART DICTATES SMALLER CHARACTERS. A VIBRATORY TOOL MAY BE USED. EXAMPLE DXXXXXXX-VY, TYPE-XX, S/N XXX.

6. APPROXIMATE WEIGHT = 1.148 LB.
7. MACHINE ALL SURFACES TO REMOVE OXIDES AND MILL FINISH, USE OF ABRASIVE REMOVAL TECHNIQUES IS NOT ALLOWED.
8. ALL PARTS SHALL BE MANUFACTURED IN ACCORDANCE WITH LIGO SPECIFICATION E0900364.
9. BEFORE FINAL MACHINING HEAT TREAT TO RC57 PER AMS-H-6875A.
10. COAT ALL SURFACES WITH OERLIKON BALINIT C-WC/C. DIMENSIONS APPLY AFTER COATING.

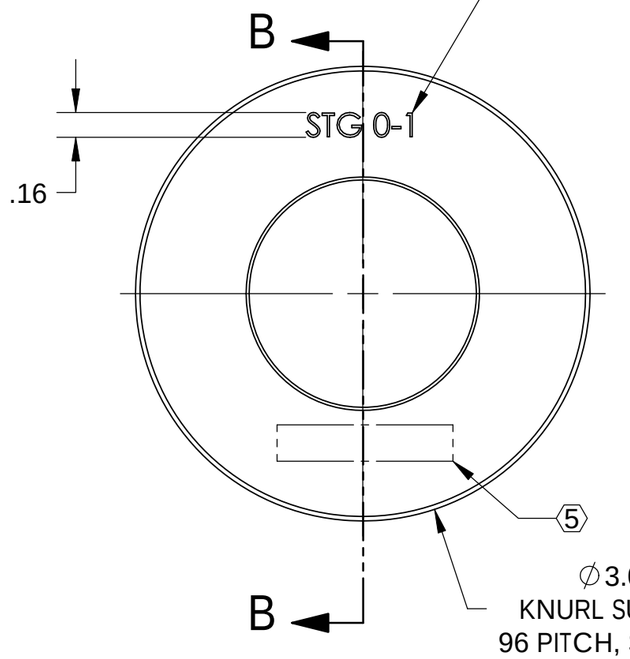

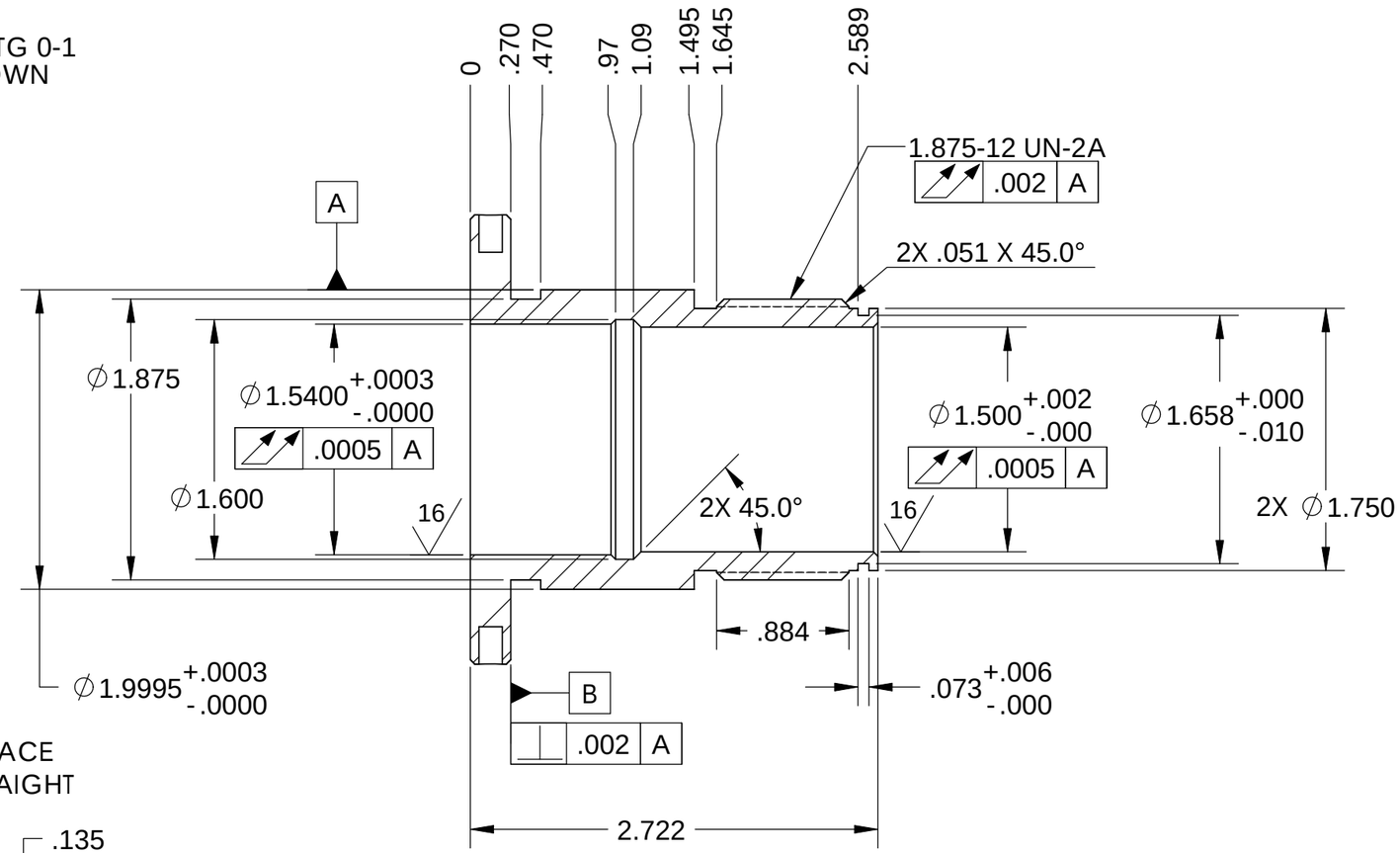

SECTION B-B

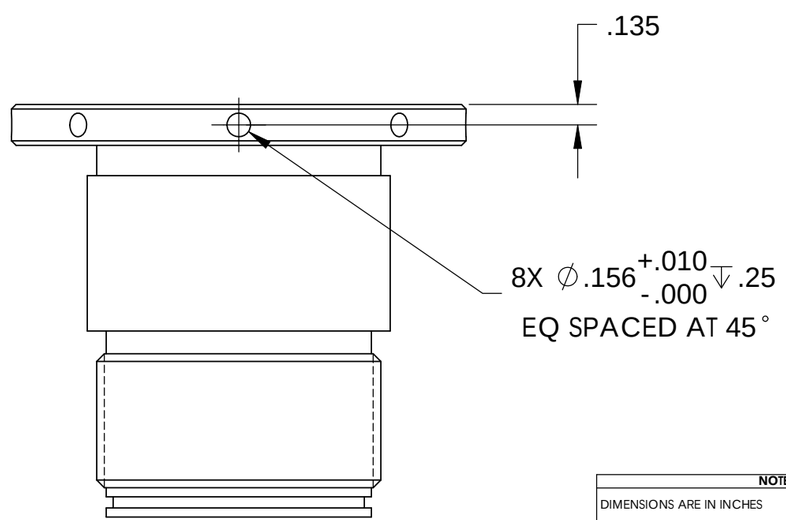

NOTES AND TOLERANCES: (UNLESS OTHERWISE SPECIFIED)

DIMENSIONS ARE IN INCHES

TOLERANCES:
.XX ± .015
.XXX ± .005

ANGULAR ± .5°

1. INTERPRET DRAWING PER ASME Y14.5-1994.
2. REMOVE ALL SHARP EDGES, R.02 MIN.
3. DO NOT SCALE FROM DRAWING.
4. ALL MACHINING FLUIDS MUST BE FULLY SYNTHETIC, FULLY WATER SOLUBLE AND FREE OF SULFUR, SILICONE, AND CHLORINE.

MATERIAL: AISI 440C PER AMS 5630
FINISH: 63 µinch

LIGO — CALIFORNIA INSTITUTE OF TECHNOLOGY, MASSACHUSETTS INSTITUTE OF TECHNOLOGY

SYSTEM: ADVANCED LIGO
SUB-SYSTEM: SEI
NEXT ASSY: D1000854

PART NAME: SLEEVE, STAGE 0-1 LOCKER, aLIGO BSC-ISI

DESIGNER	A.STEIN	01 Mar. 2010
DRAFTER	M.HILLARD	01 Mar. 2010
CHECKER	F.MATICHARD	01 Mar. 2010
APPROVAL	K.MASON	01 Mar. 2010

SIZE: B
DWG. NO.: D1000860
REV.: v1
SCALE: 1:1
PROJECTION:
SHEET 1 OF 1

D1000860, Stage 0-1 Locker, aLIGO BSC-ISI, PART PDM REV: X-007, DRAWING PDM REV: X-006