REV.	DATE	DCN #	DRAWING TREE #

NOTES CONTINUED:

11. SCRIBE, ENGRAVE, OR MECHANICALLY STAMP (NO INKS OR DYES) DRAWING PART NUMBER AND REVISION ON NOTED SURFACE FOLLOWED ON THE NEXT LINE BY A THREE DIGIT SERIAL NUMBER. SERIAL NUMBERS START AT 001 FOR THE FIRST ARTICLE AND PROCEED CONSECUTIVELY. USE .07" HIGH CHARACTERS. EXAMPLE: DXXXXXXX-YY, S/N 001. VIBRATORY TOOL MAY BE USED.
12. APPROXIMATE WEIGHT = X.XXX LB.
13. MACHINE ALL SURFACES TO REMOVE OXIDES AND MILL FINISH, USE OF ABRASIVE REMOVAL TECHNIQUES IS NOT ALLOWED. REFER TO LIGO-E0900364
14. ALL PARTS SHALL BE MANUFACTURED IN ACCORDANCE WITH LIGO SPECIFICATION E0900364.
15. ALL HELI-COIL HOLES TO BE PREPARED ACCORDING TO EMHART HELI-COIL PRODUCT CATALOG, HC2000, REV 4
16. ALL HELI-COIL INSERTS TO BE INSTALLED BY LIGO PERSONNEL, AFTER DELIVERY OF FINISHED PARTS. USE NITRONIC 60 THREADED INSERTS.
17. ALL MATERIAL IS TO BE VIRGIN MATERIAL (i.e. NO WELD REPAIRS, PLUGS OR RECYCLED MATERIAL). NO REPAIRS SHALL BE MADE UNLESS APPROVED IN ADVANCE, AND IN WRITING, BY LIGO LABORATORY. REFER TO LIGO-E0900364.
18. SURFACE FINISH TO BE AS-PROCESSED FROM MILL/SUPPLIER, FREE FROM SCRATCHES OR GOUGES.
19. PART WILL BE PORCELAIN COATED PER LIGO SPECIFICATION E1000083 AFTER FABRICATION. THE INDICATED HOLES WILL BE MASKED PRIOR TO PORCELAIN COATING TO APPROXIMATELY 2.5-3X HOLE DIAMETER CENTERED ON BOTH SIDES OF THE HOLE.
20. DIMENSIONS APPLY BEFORE PORCELAIN COATING UNLESS SPECIFIED.
21. BEND RADIUS: UNLESS OTHERWISE NOTED, THE BEND RADIUS SHOULD BE THE MINIMUM REQUIRED TO FORM WITHOUT CRACKING OR REQUIRING ADDITIONAL WORK WHEN FORMING. IN PARTICULAR F SHEET METAL IS TO BE PORCELAIN COATED, THE BEND RADIUS SHALL BE A MINIMUM OF .12" OUTSIDE RADIUS OF BEND UNLESS OTHERWISE NOTED.

NOTES 13 and 14 DO NOT APPLY TO THIS PART

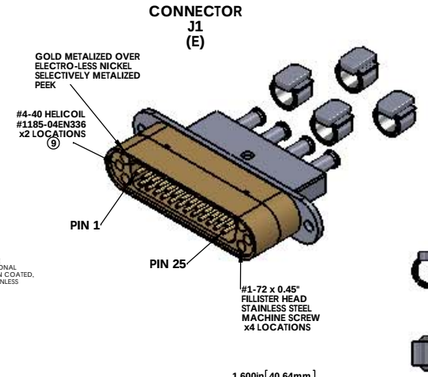

V25N-8-5-8-5 CABLE ASSEMBLY CIRCUIT SUMMARY
V-DB25 M/S1-8,5,8,5-4_u9D F/S

FROM

CONNECTOR J1 - 25 PIN MALE SUBMINI_D CONNECTOR (METALIZED PEEK)

PIN	WIRE NAME	LENGTH	TWISTED PAIR
1, SHELL	(SHIELD)		
1, SHELL	(SHIELD)	CABLE 1 (A) 8in. *	(SHIELD)
14	**(CABLE 1) WIRE 14**		**TP-1**
2	**(CABLE 1) WIRE 2**		
15	(CABLE 1) WIRE 15		TP-2
3	(CABLE 1) WIRE 3		
16	**(CABLE 1) WIRE 16**		**TP-3**
4	**(CABLE 1) WIRE 4**		
1, SHELL	(SHIELD)	CABLE 2 (B) 5in. *	(SHIELD)
17	(CABLE 2) WIRE 17		TP-4
5	(CABLE 2) WIRE 5		
18	**(CABLE 2) WIRE 18**		**TP-5**
6	**(CABLE 2) WIRE 6**		
19	(CABLE 2) WIRE 19		TP-6
7	(CABLE 2) WIRE 7		
1, SHELL	(SHIELD)	CABLE 3 (C) 8in. *	(SHIELD)
20	**(CABLE 3) WIRE 20**		**TP-7**
8	**(CABLE 3) WIRE 8**		
21	(CABLE 3) WIRE 21		TP-8
9	(CABLE 3) WIRE 9		
22	**(CABLE 3) WIRE 22**		**TP-9**
10	**(CABLE 3) WIRE 10**		
1, SHELL	(SHIELD)	CABLE 4 (D) 5in. *	(SHIELD)
23	(CABLE 4) WIRE 23		TP-10
11	(CABLE 4) WIRE 11		
24	**(CABLE 4) WIRE 24**		**TP-11**
12	**(CABLE 4) WIRE 12**		
25	(CABLE 4) WIRE 25		TP-12
13	(CABLE 4) WIRE 13		

TEST LIST			TEST LIST			TEST LIST			TEST LIST	
FROM	TO		FROM	TO		FROM	TO		FROM	TO
J1	J2		J1	J3		J1	J4		J1	J5
PIN	PIN		PIN	PIN		PIN	PIN		PIN	PIN
J1 - 1, SHELL	J2 - SHELL		J1 - 1, SHELL	J3 - SHELL		J1 - 1, SHELL	J4 - SHELL		J1 - 1, SHELL	J5 - SHELL
J1 - 14	J2 - 1		J1 - 17	J3 - 1		**J1 - 20**	J4 - 1		J1 - 23	J5 -1
J1 - 2	J2 - 6		J1 - 5	J3 - 6		**J1 - 8**	J4 - 6		J1 - 11	J5 -6
J1 - 15	J2 - 2		**J1 - 18**	J3 - 2		J1 - 21	J4 - 2		**J1 - 24**	J5 -2
J1 - 3	J2 - 7		**J1 - 6**	J3 - 7		J1 - 9	J4 - 7		**J1 - 12**	J5 -7
J1 - 16	J2 - 4		J1 - 19	J3 - 4		**J1 - 22**	J4 - 4		J1 - 25	J5 -4
J1 - 4	J2 - 9		J1 - 7	J3 - 9		**J1 - 10**	J4 - 9		J1 - 13	J5 -9

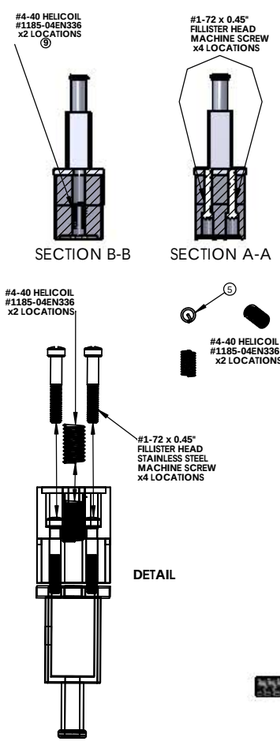

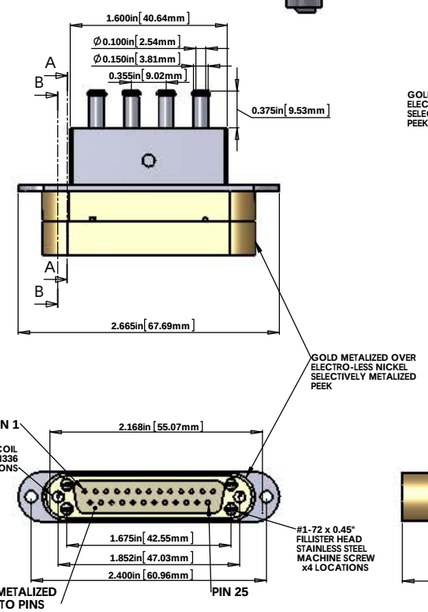

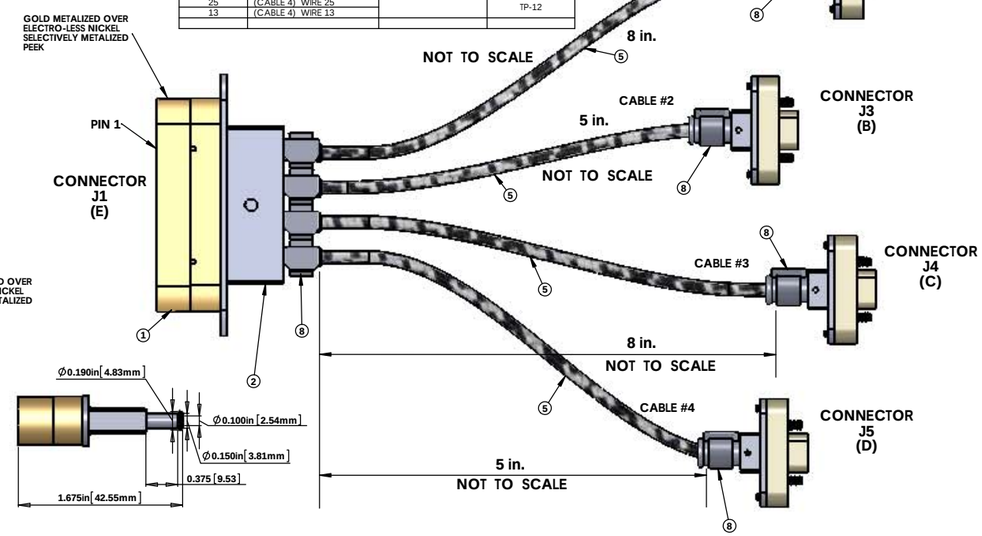

V25N-8-5-8-5 CABLE ASSEMBLY CIRCUIT SUMMARY

TO

CONNECTOR J2 - 9 PIN FEMALE MICRO_D CONNECTOR (PEEK)

PIN	WIRE NAME	SIGNAL
SHELL	SHIELD	SHIELD
1	(CABLE 1) WIRE 14	PHOTO DIODE CATHODE - (PD-K)
6	(CABLE 1) WIRE 2	PHOTO DIODE ANODE + (PD-A)
2	(CABLE 1) WIRE 15	LED ANODE + (LED-A)
7	(CABLE 1) WIRE 3	LED CATHODE - (LED-K)
4	(CABLE 1) WIRE 16	FN
9	(CABLE 1) WIRE 4	ST

V25N-8-5-8-5 CABLE ASSEMBLY CIRCUIT SUMMARY

TO

CONNECTOR J3 - 9 PIN FEMALE MICRO_D CONNECTOR (PEEK)

PIN	WIRE NAME	SIGNAL
SHELL	SHIELD	SHIELD
1	(CABLE 2) WIRE 17	PHOTO DIODE CATHODE - (PD-K)
6	(CABLE 2) WIRE 5	PHOTO DIODE ANODE + (PD-A)
2	(CABLE 2) WIRE 18	LED ANODE + (LED-A)
7	(CABLE 2) WIRE 6	LED CATHODE - (LED-K)
4	(CABLE 2) WIRE 19	FN
9	(CABLE 2) WIRE 7	ST

V25N-8-5-8-5 CABLE ASSEMBLY CIRCUIT SUMMARY

TO

CONNECTOR J4 - 9 PIN FEMALE MICRO_D CONNECTOR (PEEK)

PIN	WIRE NAME	SIGNAL
SHELL	SHIELD	SHIELD
1	(CABLE 3) WIRE 20	PHOTO DIODE CATHODE - (PD-K)
6	(CABLE 3) WIRE 8	PHOTO DIODE ANODE + (PD-A)
2	(CABLE 3) WIRE 21	LED ANODE + (LED-A)
7	(CABLE 3) WIRE 9	LED CATHODE - (LED-K)
4	(CABLE 3) WIRE 22	FN
9	(CABLE 3) WIRE 10	ST

V25N-8-5-8-5 CABLE ASSEMBLY CIRCUIT SUMMARY

TO

CONNECTOR J5 - 9 PIN FEMALE MICRO_D CONNECTOR (PEEK)

PIN	WIRE NAME	SIGNAL
SHELL	SHIELD	SHIELD
1	(CABLE 4) WIRE 23	PHOTO DIODE CATHODE - (PD-K)
6	(CABLE 4) WIRE 11	PHOTO DIODE ANODE + (PD-A)
2	(CABLE 4) WIRE 24	LED ANODE + (LED-A)
7	(CABLE 4) WIRE 12	LED CATHODE - (LED-K)
4	(CABLE 4) WIRE 25	FN
9	(CABLE 4) WIRE 13	ST

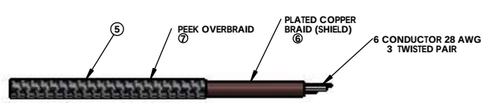

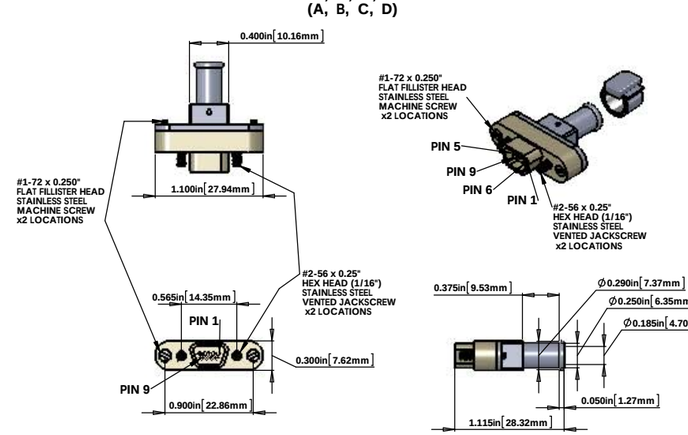

BILL OF MATERIALS

ITEM NO.	PART NUMBER	DESCRIPTION	QTY.	LENGTH
①	TICOR #TS0149-25CG20BS4-100F (OR EQUIVALENT)	DB25 MALE CONNECTOR (J1) FOR UHV (GOLD METALIZED PEEK)	1	
②		DB25 CONNECTOR BACKSHELL FOR UHV (STAINLESS)		
③	TICOR #TS009 WITH FLYING LEADS (OR EQUIVALENT)	DB9 (DE9) FEMALE CONNECTOR (J2,J3,J4,J5) FOR UHV (PLAIN PEEK)	4	
④		DB9 CONNECTOR BACKSHELL FOR UHV (STAINLESS)		
⑤	CABLE INCLUDING COONER WIRE # C21105 + ⑥ + ⑦	6 COND. (3 TWISTED PAIR) CABLE (WITH ⑥ COPPER BRAID (SHIELD). AND ⑦ PEEK OVERBRAID) .	4	CABLE 1 8in.* CABLE 2 5in.* CABLE 3 8in.* CABLE 4 5in.*
⑥	CONTINENTAL PART #24x3x40BC	COPPER BRAID - CONTINENTAL CORDAGE PART #24x3x40BC	4	
⑦	PART #6759	PEEK BRAID - PART #6759 MANUFACTURED WITH ZEUS 0.016" BLACK PEEK DRAWN MONOFILAMENT	4	
⑧	GLENAIR # 600-052 or BAND-IT # A10086	GLENAIR # 600-052 STANDARD BRAID CLAMP or BAND-IT PART # A10086 (0.240" WIDE) ("BAG OF 100" # A10089)	8	
⑨	HELICOIL #1185-04EN336	#4-40 Nitronic 60® HELICOIL 0.336" LENGTH	2	

* NOTE: THE OVERALL LENGTH IS MEASURED FROM BAND CLAMP ("CABLE SIDE" EDGE) (25 PIN) TO BAND CLAMP ("CABLE SIDE" EDGE) (9 PIN) OF THE CABLE. USE WHATEVER LENGTH IS NECESSARY FOR THE INTERNAL WIRING OF THE CONNECTORS AND STRIP LENGTH TO ACHIEVE THE CORRECT OVERALL LENGTH.

ELECTRICAL NOTES: (UNLESS OTHERWISE SPECIFIED)

A. MATERIAL:
a. J1 CONNECTOR SHELL - GOLD OVER ELECTRO-LESS NICKEL SELECTIVELY METALIZED PEEK VICTREX 450GL30.
b. J2, J3, J4, J5 CONNECTOR SHELL - PEEK VICTREX 450GL30.
c. BACKSHELL - STAINLESS STEEL WITH 4 PORTS AND VENT HOLE.
d. CONTACTS - BERYLLIUM COPPER ALLOY C17300 0.000050 MIN. GOLD OVER NICKEL.
e. HARDWARE: STAINLESS STEEL, PASSIVATED.
f. PEEK BRAID - PEEK VICTREX GRADE TDS-450CA30 CARBON LOADED.

B. CABLE 6 COND. 28 AWG, (65 STRD 46 AWG) WITH WITH PFA INSULATION. 3 TWISTED PAIRS (4 TO 5 TWISTS PER INCH). OVERALL 40AWG COPPER BRAID 90% COVERAGE. OVERALL PEEK BRAID MIN. 50% COVERAGE. OVERALL CABLE O.D. WILL BE APPROX. 0.240 IN.

C. CONNECTORS WILL BE SUPPLIED WITH HARDWARE. THE SCREWS SHOULD BE THE PROPER LENGTH FOR MATING.

ISC TIP TILT CABLE
SEISMIC TABLE TO TIP TILT OSEMS
V-DB25 M/S1-8,5,8,5-4_u9D F/S

STANDARD USE FOR THIS CABLE

SUBSYSTEM	AIR/VAC	STANDARD USE
ISC	IN-VAC	TT TIP TILT OSEMS

NOTES AND TOLERANCES: (UNLESS OTHERWISE SPECIFIED)
1. INTERPRET DRAWING PER ASME Y14.5-1994.
2. REMOVE ALL SHARP EDGES, .005-.015. FOR MACHINED PARTS, ROUND ALL EDGES APPROXIMATELY R.02 FOR SHEET METAL PARTS.
3. DO NOT SCALE FROM DRAWING.
4. ALL MACHINING FLUIDS MUST BE FULLY SYNTHETIC, FULLY WATER SOLUBLE AND FREE OF SULFUR, SILICONE, AND CHLORINE.

DIMENSIONS ARE IN
TOLERANCES:
.XX ±
.XXX ±
ANGULAR± °

MATERIAL
FINISH µinch

LIGO CALIFORNIA INSTITUTE OF TECHNOLOGY MASSACHUSETTS INSTITUTE OF TECHNOLOGY

SYSTEM
SUB-SYSTEM ISC
NEXT ASSY

PART NAME
CUSTOM CABLE SPECIFICATION V25N-8-5-8-5

DESIGNER	R. ABBOTT	MAY/11/2012	SIZE E	DWG. NO. D1000228
DRAFTER	E. BROWN	MAY/11/2012		REV. v8
CHECKER				
APPROVAL			SCALE: 2:1	PROJECTION: SHEET 1 OF 1

D1000228-v8 - cable V25N-8_5_8_5_PART FROM REV - DR AWING FOR REV - 1/0000