REV.	DATE	DCN #	DRAWING TREE #
v1	22 Feb. 2010	E1000049	E1000025

NOTES CONTINUED:

5. SCRIBE, ENGRAVE, OR MECHANICALLY STAMP (NO INKS OR DYES) DRAWING PART NUMBER, REVISION (AND VARIANT OR "TYPE" IF APPLICABLE) ON NOTED SURFACE OF PART FOLLOWED ON THE NEXT LINE WITH A THREE DIGIT SERIAL NUMBER. SERIAL NUMBERS START AT 001 FOR THE FIRST ARTICLE AND PROCEED CONSECUTIVELY. USE MINIMUM 0.12" HIGH CHARACTERS, UNLESS THE SIZE OF THE PART DICTATES SMALLER CHARACTERS. A VIBRATORY TOOL MAY BE USED. EXAMPLE: DXXXXXXX-VY, TYPE-XX, S/N XXX
6. APPROXIMATE WEIGHT = 1.062 LB.
7. A TRUE POSITION TOLERANCE OF ∅.010 IS ~ THE SAME AS A CONVENTIONAL TOLERANCE OF ±.005.
8. MACHINE ALL SURFACES TO REMOVE OXIDES AND MILL FINISH, USE OF ABRASIVE REMOVAL TECHNIQUES IS NOT ALLOWED.
9. ALL THREADED INSERTS TO BE INSTALLED BY LIGO PERSONAL, AFTER DELIVERY OF FINISHED PARTS.
10. ALL PARTS SHALL BE MANUFACTURED IN ACCORDANCE WITH LIGO SPECIFICATION E0900364.

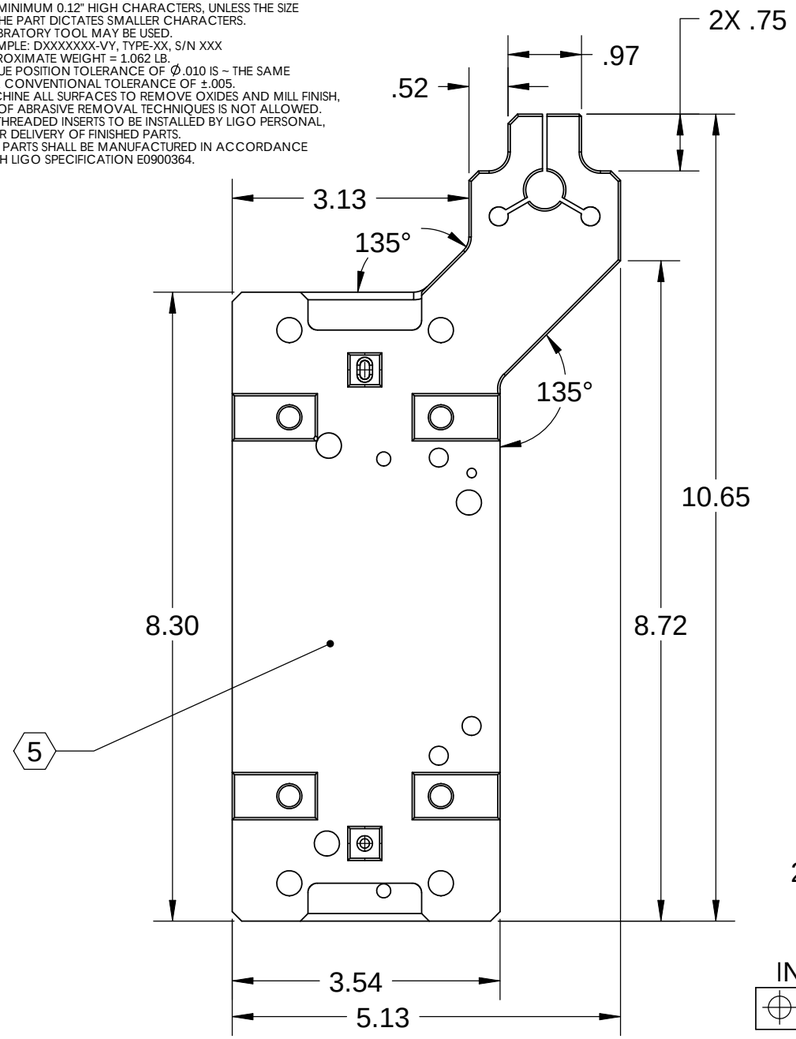

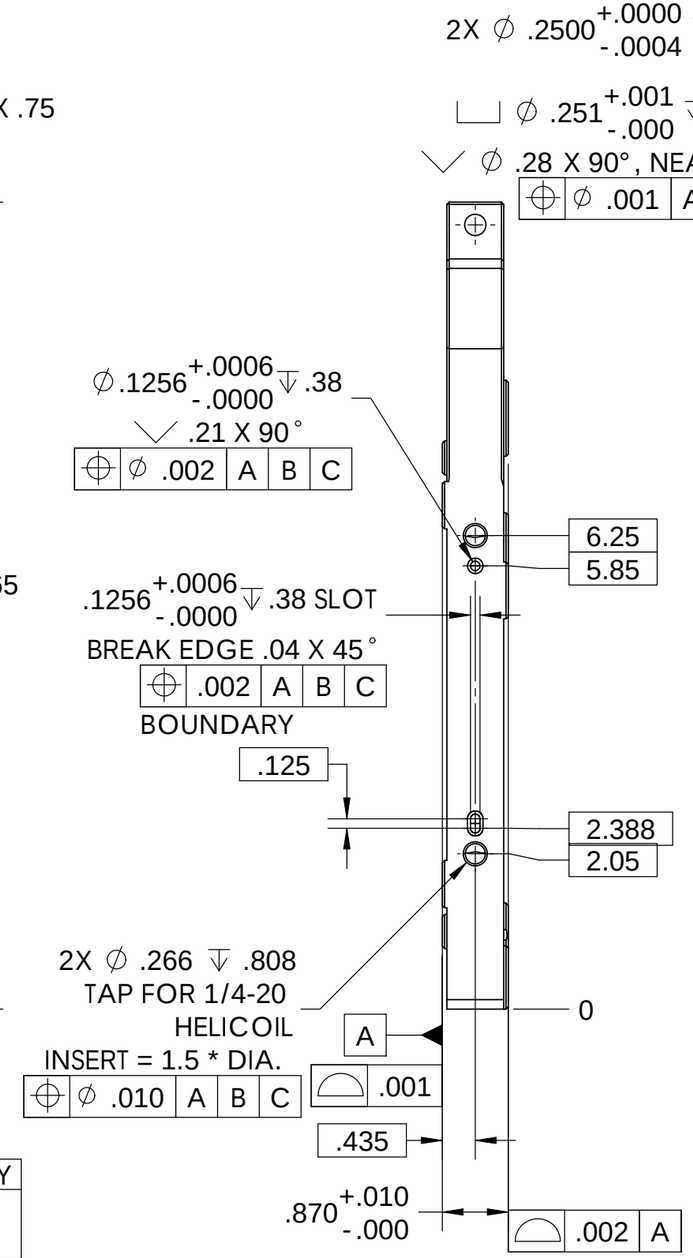

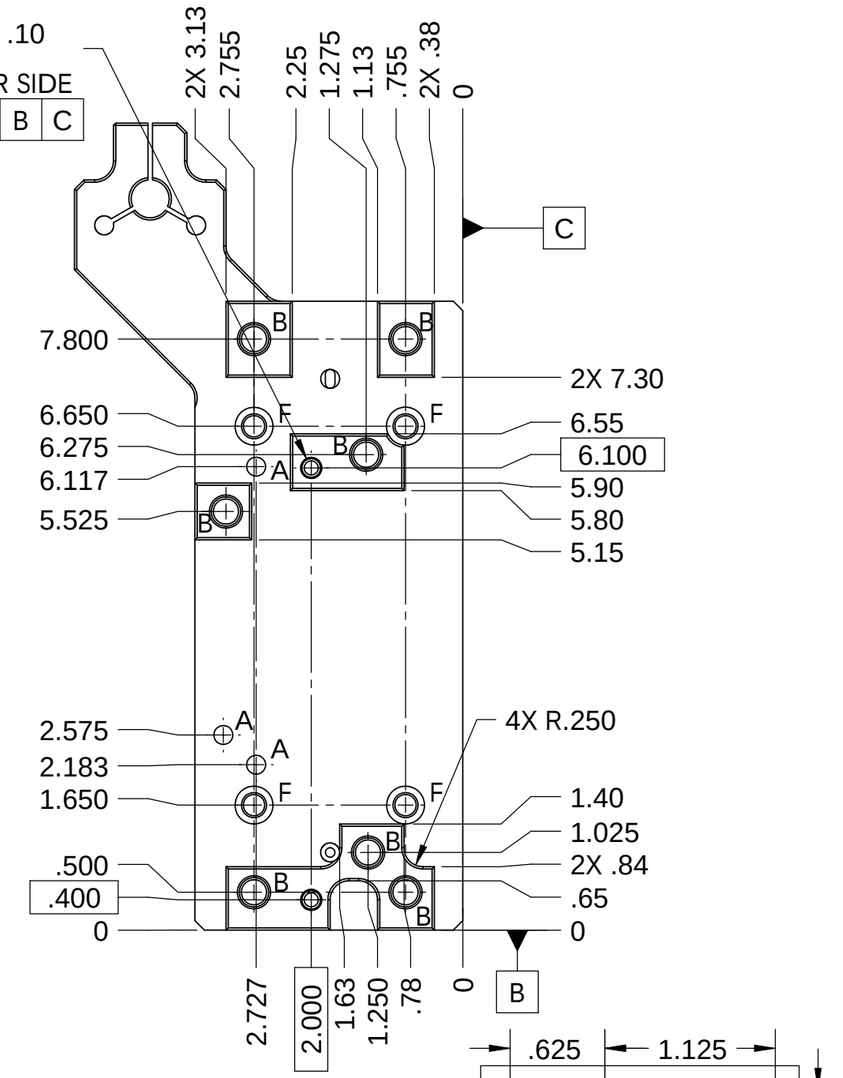

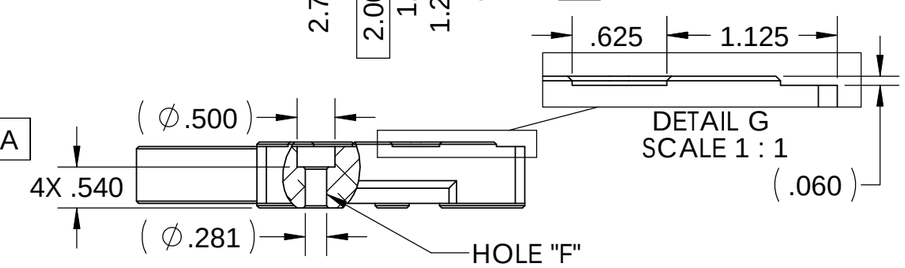

FRONT VIEW FOR BACKSIDE DETAILS VIEW SEE SHEET 2

TAG	SIZE	QTY
A	∅ .250 THRU ALL	3
B	∅ .332 THRU ALL ∨ ∅ .44 X 90°, NEAR SIDE TAP FOR 5/16-18 HELICOIL INSERT = 2.0 * DIA. ∨ ∅ .44 X 90°, FAR SIDE	7
F	∅ .281 THRU ALL ⌴ ∅ .500 (↧ .33) ∨ ∅ .331 X 82°, MID SIDE ∨ ∅ .331 X 82°, FAR SIDE	4

NOTES AND TOLERANCES: (UNLESS OTHERWISE SPECIFIED)

DIMENSIONS ARE IN INCHES

TOLERANCES:
.XX ± .015
.XXX ± .005

ANGULAR ± 0.5°

1. INTERPRET DRAWING PER ASME Y14.5-1994.
2. BREAK ALL CORNERS AND EDGES .03 X 45°.
3. DO NOT SCALE FROM DRAWING.
4. ALL MACHINING FLUIDS MUST BE FULLY SYNTHETIC, FULLY WATER SOLUBLE AND FREE OF SULFUR, SILICONE, AND CHLORINE.

MATERIAL: 6061-T6 Al
FINISH: 63 µinch

LIGO — CALIFORNIA INSTITUTE OF TECHNOLOGY, MASSACHUSETTS INSTITUTE OF TECHNOLOGY

SYSTEM: ADVANCED LIGO
SUB-SYSTEM: SEI
NEXT ASSY: D0901103 & D0901102

PART NAME: ACTUATOR MAGNET BRACKET, STAGE 0-1, aLIGO BSC ISI

DESIGNER	S.BARNUM	22 Feb. 2010	
DRAFTER	M.HILLARD	22 Feb. 2010	
CHECKER	F.MATICHARD	22 Feb. 2010	
APPROVAL	K.MASON	22 Feb. 2010	

SIZE: B
DWG. NO.: D0902310
REV.: v1
SCALE: 1:2
PROJECTION:
SHEET 1 OF 2

D0902310 Stage0-1 Horizontal Actuator Magnet Bracket, PART PDM REV: X-022, DRAWING PDM REV: X-010

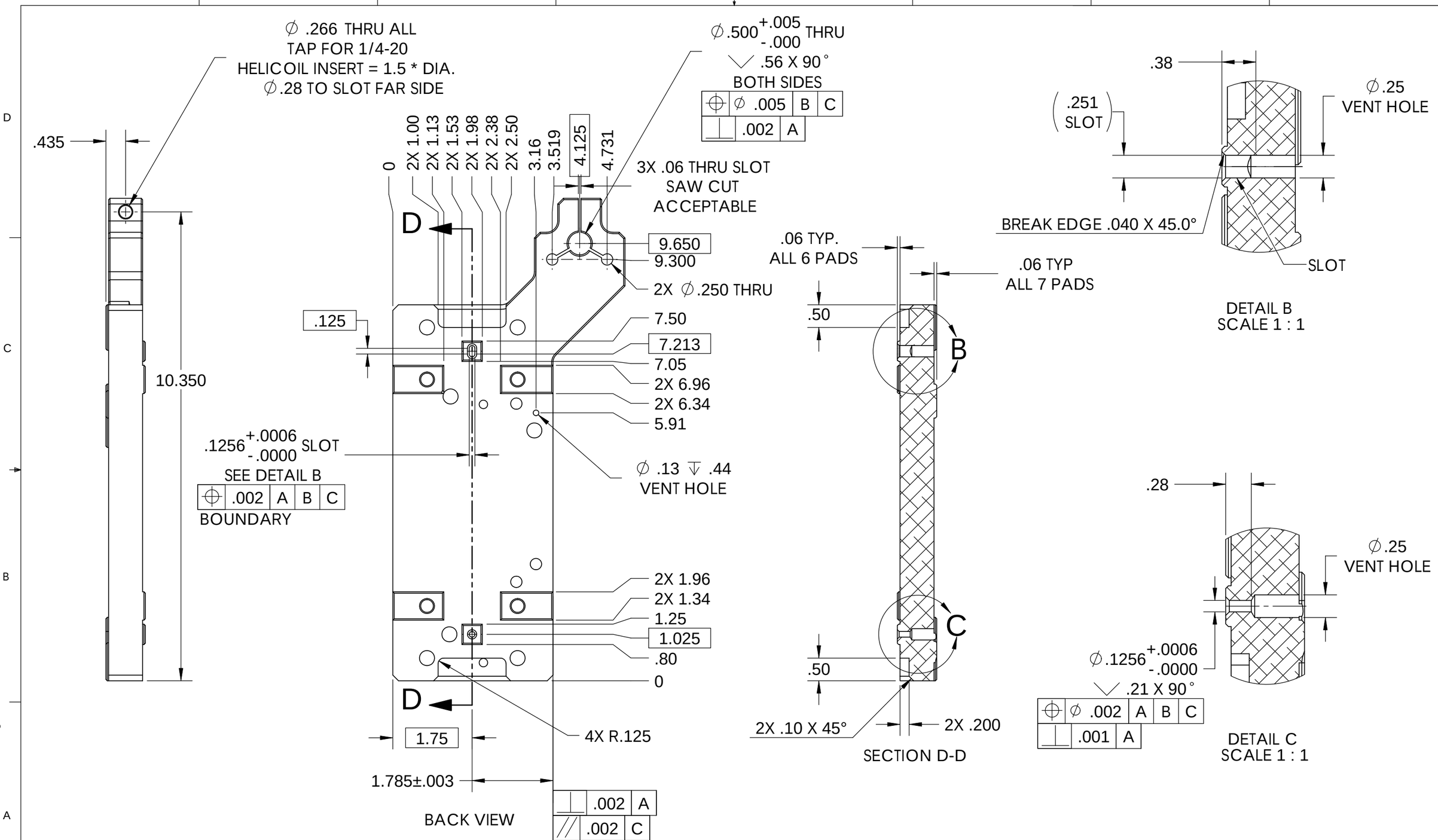

LIGO CALIFORNIA INSTITUTE OF TECHNOLOGY
MASSACHUSETTS INSTITUTE OF TECHNOLOGY

SIZE	DWG. NO.	REV.
B	D0902310	v1
SCALE: 1:2	PROJECTION:	SHEET 2 OF 2

D0902310 Stage0-1 Horizontal Actuator Magnet Bracket, PART PDM REV: X-022, DRAWING PDM REV: X-010