REV.	DATE	DCN #	DRAWING TREE #
v1	19 Mar. 2010	E1000049	E1000025

NOTES CONTINUED:

5. SCRIBE, ENGRAVE, OR MECHANICALLY STAMP (NO DYES OR INKS) A UNIQUE THREE DIGIT SERIAL NUMBER & REVISION NUMBER ON EACH PART. SERIAL NUMBERS START AT 001 FOR THE FIRST ARTICLE AND PROCEED CONSECUTIVELY. BAG AND TAG PARTS WITH THEIR DRAWING PART NUMBER, REVISION, VARIENT OR "TYPE" (IF APPLICABLE), AND QUANTITY. IF PARTS ARE TO SMALL TO SCRIBE, BAGGING AND TAGGING ALONE IS SUFFICIENT.
   EXAMPLE (PART): 001-V1
   EXAMPLE (TAG): DXXXXXXX-VY, TYPE-XX, QTY:TBD
6. APPROXIMATE WEIGHT = 0.012 LB.
7. MACHINE ALL SURFACES TO REMOVE OXIDES AND MILL FINISH, USE OF ABRASIVE REMOVAL TECHNIQUES IS NOT ALLOWED.
8. ALL PARTS SHALL BE MANUFACTURED IN ACCORDANCE WITH LIGO SPECIFICATION E0900364.
9. FINISH: ELECTROPOLISH ALL DIMS APPLY AFTER FINISHING.

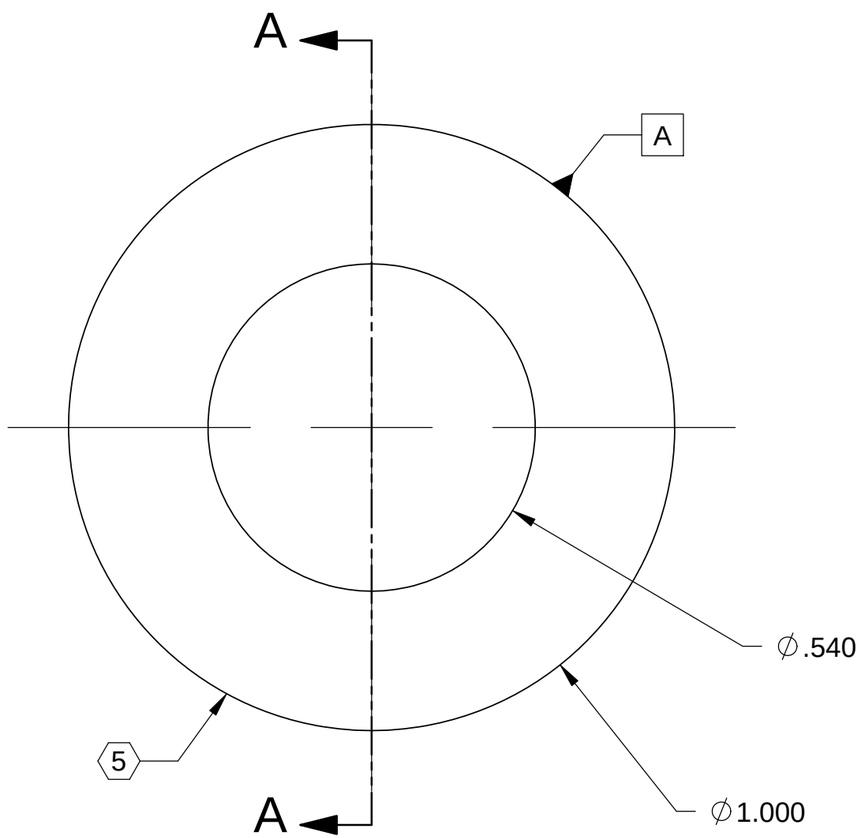

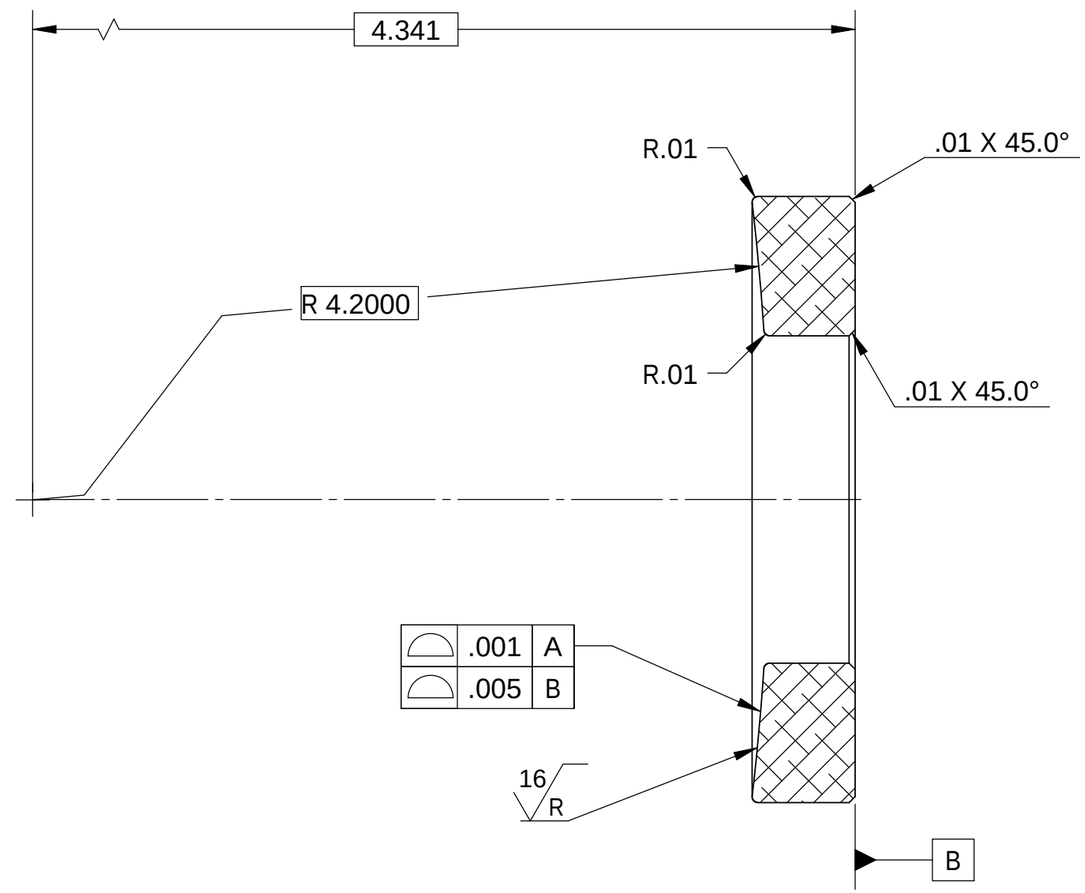

SECTION A-A

D0902157 Spherical Washer, 1 in OD Concave , aLIGO BSC ISI, PART PDM REV: X-006, DRAWING PDM REV: X-002

NOTES AND TOLERANCES: (UNLESS OTHERWISE SPECIFIED)

DIMENSIONS ARE IN INCHES

TOLERANCES:
.XX ± .015
.XXX ± .005

ANGULAR ± .5°

1. INTERPRET DRAWING PER ASME Y14.5-1994.
2. BREAK ALL EDGES AND CORNERS .03 X 45°.
3. DO NOT SCALE FROM DRAWING.
4. ALL MACHINING FLUIDS MUST BE FULLY SYNTHETIC, FULLY WATER SOLUBLE AND FREE OF SULFUR, SILICONE, AND CHLORINE.

MATERIAL: 304 SSTL

FINISH: 32 µinch

LIGO — CALIFORNIA INSTITUTE OF TECHNOLOGY, MASSACHUSETTS INSTITUTE OF TECHNOLOGY

SYSTEM: ADVANCED LIGO

SUB-SYSTEM: SEI

NEXT ASSY: D0902530, D0902531

PART NAME: SPHERICAL WASHER, 1 IN. OD CONCAVE, aLIGO BSC ISI

DESIGNER	S.BARNUM	19 Mar. 2010
DRAFTER	M.HILLARD	19 Mar. 2010
CHECKER	F.MATICHARD	19 Mar. 2010
APPROVAL	K.MASON	19 Mar. 2010

SIZE: B

DWG. NO.: D0902157

REV.: v1

SCALE: 4:1

PROJECTION:

SHEET 1 OF 1