REV.	DATE	DCN #	DRAWING TREE #
v1	19 Mar. 2010	E1000049	E1000025

NOTES CONTINUED:

5. SCRIBE, ENGRAVE, OR MECHANICALLY STAMP (NO INKS OR DYES) DRAWING PART NUMBER, REVISION (AND VARIENT OR "TYPE" IF APPLICABLE ON NOTED SURFACE OF PART FOLLOWED ON THE NEXT LINE WITH A THREE DIGIT SERIAL NUMBER. SERIAL NUMBERS START AT 001 FOR THE FIRST ARTICLE AND PROCEED CONSECUTIVELY. USE MINIMUM 0.12 HIGH CHARACTERS, UNLESS THE SIZE OF THE PART DICTATES SMALLER CHARACTERS. A VIBRATORY TOOL MAY BE USED. EXAMPLE DXXXXXXX-VY, TYPE-XX, S/N XXX.
6. APPROXIMATE WEIGHT = 0.19 LB.
7. MACHINE ALL SURFACES TO REMOVE OXIDES AND MILL FINISH, USE OF ABRASIVE REMOVAL TECHNIQUES IS NOT ALLOWED.
8. ALL PARTS SHALL BE MANUFACTURED IN ACCORDANCE WITH LIGO SPECIFICATION E0900364.

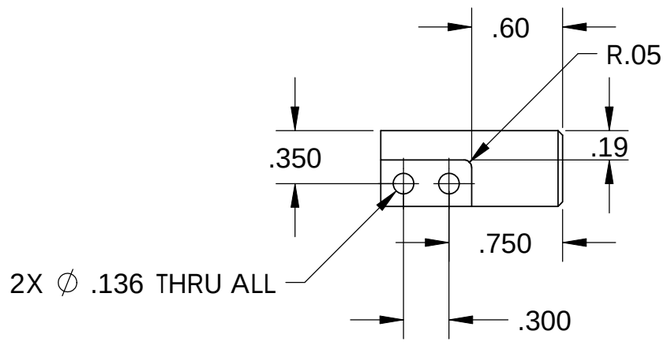

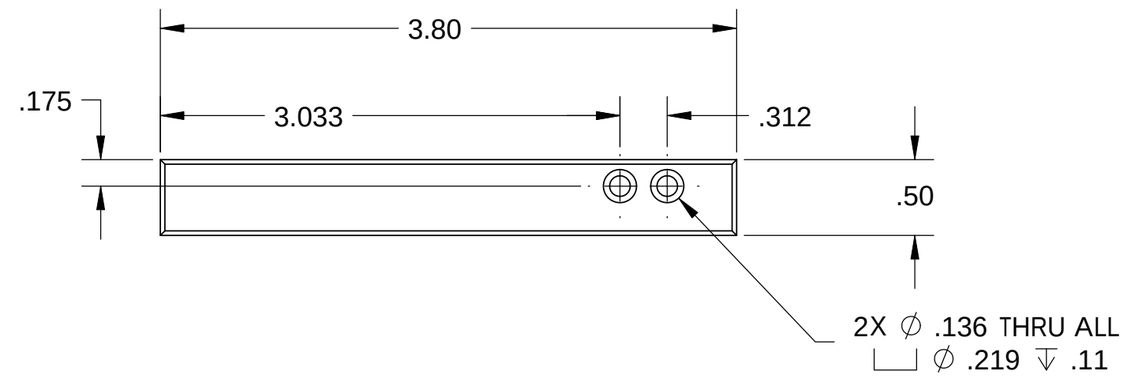

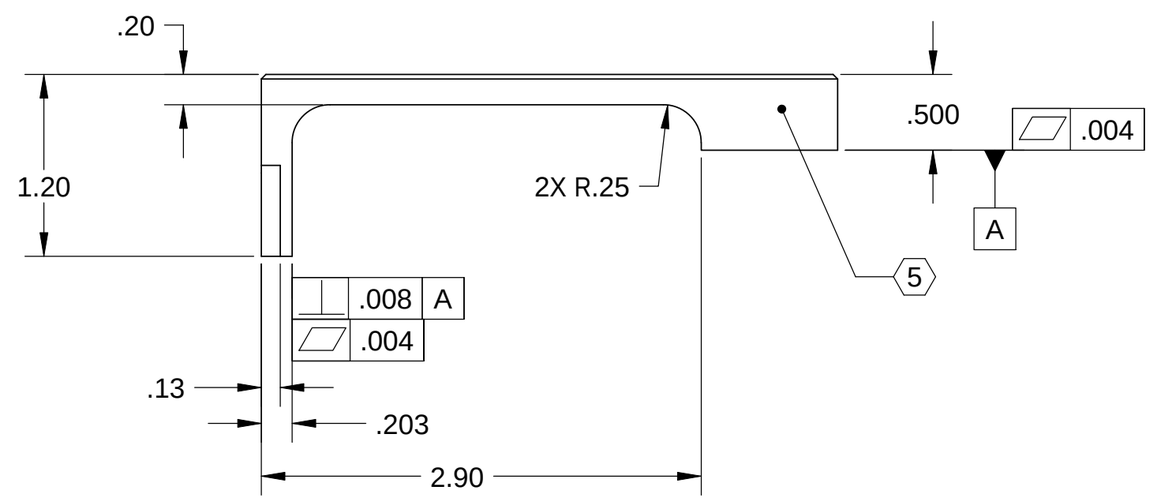

NOTES AND TOLERANCES: (UNLESS OTHERWISE SPECIFIED)		
DIMENSIONS ARE IN INCHES TOLERANCES: .XX ± .015 .XXX ± .005 ANGULAR ± .5°	1. INTERPRET DRAWING PER ASME Y14.5-1994. 2. BREAK ALL EDGES AND CORNERS .03 X 45°. 3. DO NOT SCALE FROM DRAWING. 4. ALL MACHINING FLUIDS MUST BE FULLY SYNTHETIC, FULLY WATER SOLUBLE AND FREE OF SULFUR, SILICONE, AND CHLORINE.	
	MATERIAL: COPPER	FINISH: 63 µinch

LIGO — CALIFORNIA INSTITUTE OF TECHNOLOGY, MASSACHUSETTS INSTITUTE OF TECHNOLOGY

SYSTEM: ADVANCED LIGO — SUB-SYSTEM: SEI — NEXT ASSY: D0902531

PART NAME: SMALL ACTUATOR THERMAL BAR RIGHT, aLIGO BSC ISI

DESIGNER	S.BARNUM	19 Mar. 2010
DRAFTER	M.HILLARD	19 Mar. 2010
CHECKER	F.MATICHARD	19 Mar. 2010
APPROVAL	K.MASON	19 Mar. 2010

SIZE: B — DWG. NO.: D0902153 — REV.: v1

SCALE: 1:1 — PROJECTION: — SHEET 1 OF 1

D0902153 Small Actuator Thermal Bar Right, PART PDM REV: X-009, DRAWING PDM REV: X-003