REV.	DATE	DCN #	DRAWING TREE #
A	13/OCT/06	E060239	.
B	19/DEC/07	E060239-B	.

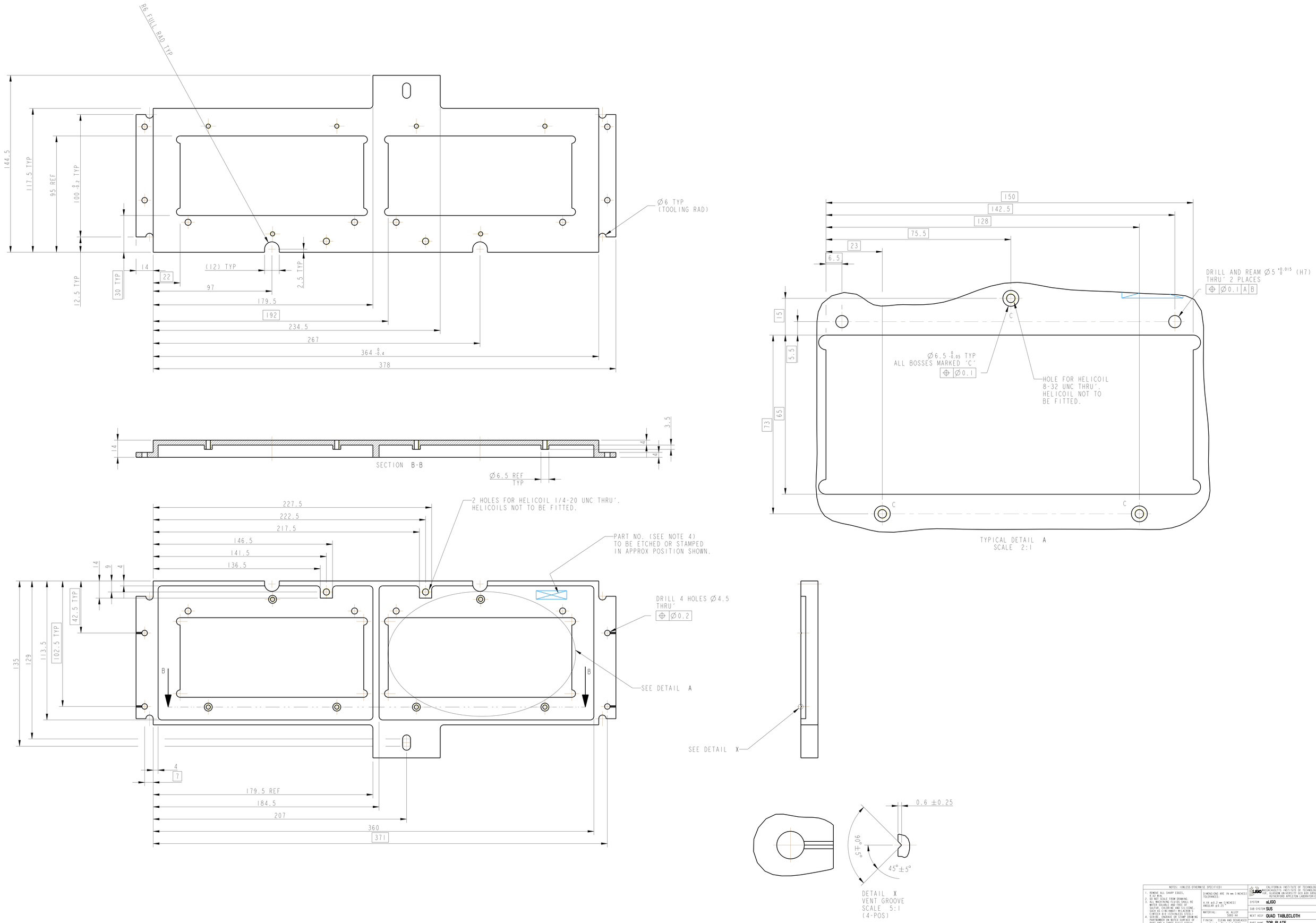

NOTES: (UNLESS OTHERWISE SPECIFIED)

1. REMOVE ALL SHARP EDGES, 0.02 MIN.
2. DO NOT SCALE FROM DRAWING.
3. ALL MACHINING FLUIDS SHALL BE WATER SOLUBLE AND FREE OF SULFUR, CHLORINE AND SILICONE, SUCH AS CINCINNATI WILACHON'S CHATTER KIDS (STAINLESS STEEL)
4. SCRIBE, ENGRAVE OR STAMP DRAWING PARTNUMBER ON NOTED SURFACE OF PART AND A THREE DIGIT SERIAL NUMBER. SERIAL NUMBERS START AT 001 FOR THE FIRST PART AND PROCEED CONSECUTIVELY. USE 07" HIGH CHARACTERS. EXAMPLE: D020180 001. A VIBRATORY TOOL MAY BE USED.

DIMENSIONS ARE IN mm [INCHES]
TOLERANCES:
X.XX ±0.2 mm [INCHES]
ANGULAR ±0.25°

MATERIAL: AL ALLOY 5083 H4

FINISH: CLEAN AND DEGREASED
m [µin] Ra = 1.6 [63]

	NAME	DATE
DRAWN	T WILMOT	03/10/06
CHECKED	MB	15/MAR/10
APPROVED	JOD	15/MAR/10

CALIFORNIA INSTITUTE OF TECHNOLOGY
MASSACHUSETTS INSTITUTE OF TECHNOLOGY
UNIV. GLASGOW UNIVERSITY GEO 600 GROUP
RUTHERFORD APPLETON LABORATORIES

SYSTEM: aLIGO
SUB-SYSTEM: SUS
NEXT ASSY: QUAD TABLECLOTH
PART NAME: TOP PLATE NOISE TABLECLOTH
SIZE: E
DRG. NO.: D060313
REV: C
SCALE 1:1 PROJECTION
SHEET 1 OF 1