REV.	DATE	DCN #	DRAWING TREE #
A	7/04	E040303-00	E030507-A

Rounded_SHCS.step

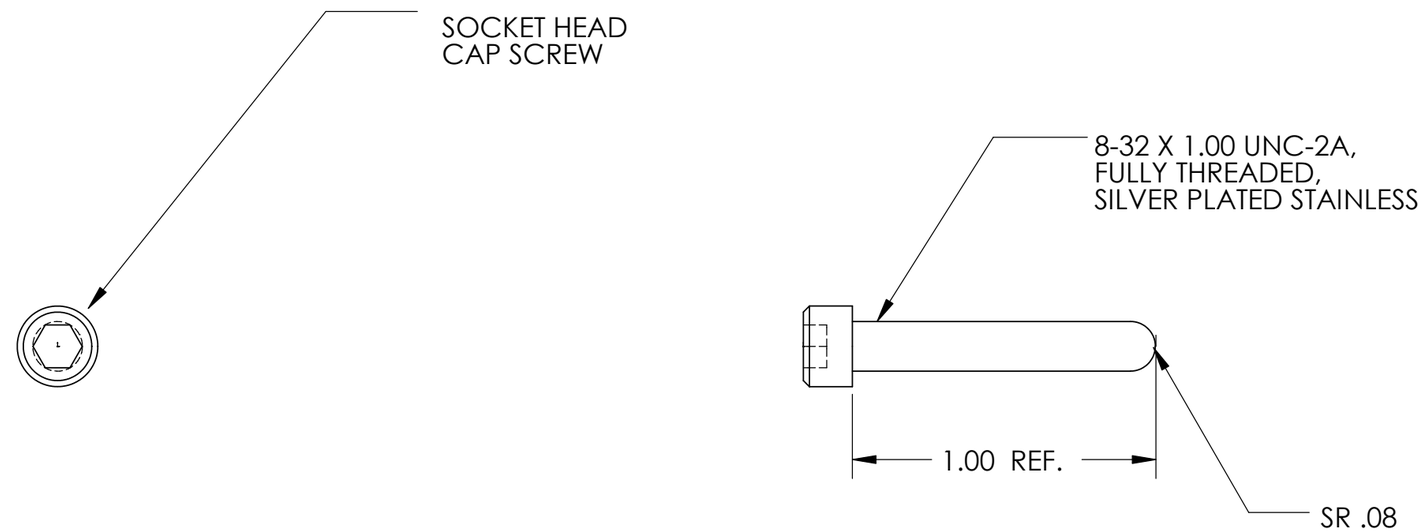

PARTS LIST

NOTES: (UNLESS OTHERWISE SPECIFIED)

1. DIMENSIONS IN INCHES.
2. REMOVE ALL SHARP EDGES, R.02 MIN.
3. ALL MACHINING FLUIDS SHALL BE WATER SOLUBLE AND FREE OF SULFUR, CHLORINE AND SILICONE, SUCH AS CINCINNATI MILACRON'S CIMTECH 410 (STAINLESS STEEL)

	NAME	DATE
DRAWN	J.ROMIE	01/03
CHECKED		

DIMENSIONS ARE IN INCHES
TOLERANCES:

.XX ± --0.01
.XXX ± --0.005

ANGULAR ± -- 0.5°

LIGO CALIFORNIA INSTITUTE OF TECHNOLOGY
MASSACHUSETTS INSTITUTE OF TECHNOLOGY

SYSTEM ADVANCED LIGO

SUB-SYSTEM SUS

NEXT ASSY MODE CLEANER SUS

PART NAME SILVER PLATED STAINLESS SHCS 8-32X1.00, ROUNDED END

SIZE **B** | DWG. NO. D030025 | REV. A

SCALE: NTS | PROJECTION: | SHEET 1 OF 1

FILE NAME/LOCATION: