REVISIONS												
LTR	ZONE	DESCRIPTION	DWN	CHK	ENGR	STRESS	MATL	THRM	ME	PROJ	QA	RELEASE DATE
A		INITIAL RELEASE										

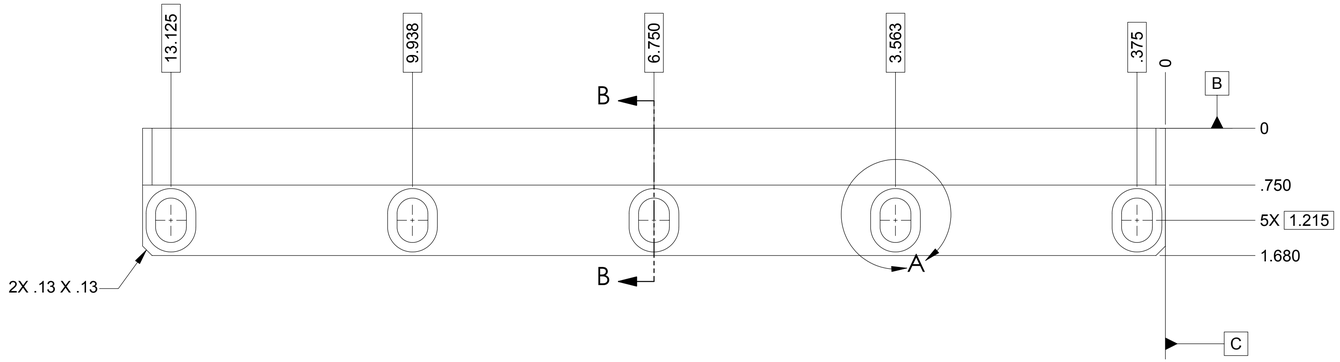

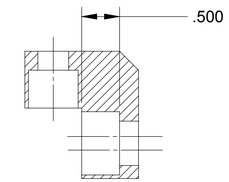

SECTION B-B
SCALE 1 : 1
TYP 5 PLACES

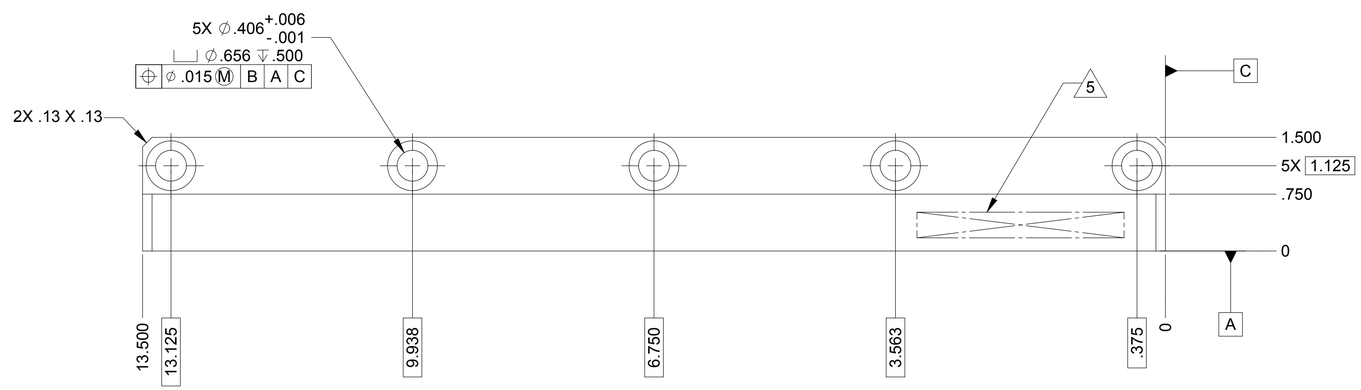

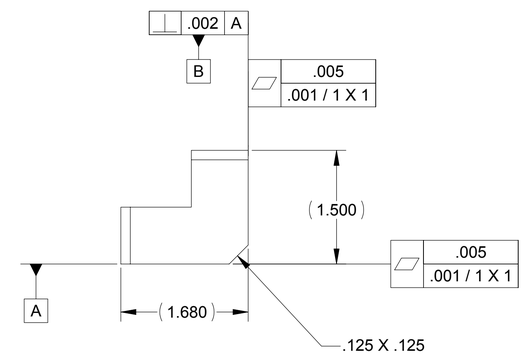

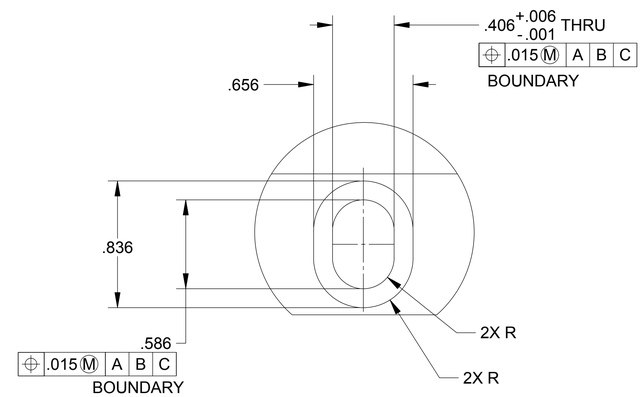

DETAIL A
SCALE 2 : 1
TYP 5 PLACES

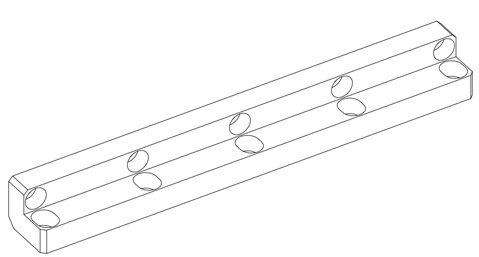

NOTES: UNLESS OTHERWISE SPECIFIED.

1. ALL PARTS SHALL BE MANUFACTURED IN ACCORDANCE WITH ASI SPECIFICATION 20008225 (LIGO E048225).
2. REMOVE ALL BURRS AND SHARP EDGES .005-.015.
3. MACHINE FILLET RADII .003-.015.
4. COUNTERSINK 82° ALL DRILLED HOLES .015-.030 DEEP BOTH SIDES.
5. MARK PART AND SERIAL NUMBER IN LOCATION APPROXIMATELY SHOWN USING 0.13 INCH HIGH CHARACTERS IN ACCORDANCE WITH 20006686, TYPE I, CLASSES 4, 5, OR 6. SERIAL NUMBERS START AT 001 FOR FIRST PART AND THEN PROCEDE CONSECUTIVELY. PARTS TOO SMALL TO MARK SHALL BE IDENTIFIED IN ACCORDANCE WITH 20006686, TYPE II.
6. RECORD WEIGHT TO NEAREST 0.1 LB ON INSPECTION REPORT AFTER FINAL MACHINING. ESTIMATED WEIGHT IS 2.1 LBS.

20007864-1

QTY REQD	ITEM NO	REF DES	CAGE NO	PART OR IDENTIFYING NO	NOMENCLATURE OR DESCRIPTION	SPECIFICATION	MATERIAL OR NOTE	ZONE

PARTS LIST

CONTRACT NO

20007845	1388
NEXT ASSEMBLY	PROJECT CODE
APPLICATION	

UNLESS OTHERWISE SPECIFIED
DIMENSIONS ARE IN INCHES
TOLERANCES
DECIMALS .XX ±.03 .XXX ±.010
ANGLES ±1/2°
MACHINE FINISH 125
DO NOT SCALE DRAWING
INTERPRET DWG PER ASME Y14.5M

MATERIAL
AL ALY 6061-T651
AMS QQ-A-250/11

RELEASED
1/17/2005
THIS DRAWING IS PRELIMINARY AND NOT UNDER CONFIGURATION CONTROL UNLESS A RED RELEASED STAMP IS PRESENT

DWN KEVIN J SPINK 07/07/04
PROJ ENGR
STRS
CHK
MATL
CONFIG
PROJ
ME
QA

ALLIANCE SPACESYSTEMS, INC.
1250 Lincoln Ave., Suite 100
Pasadena, CA 91103

ANGLE BRACKET, LONG
BAY BULKHEAD
LIGO D047864-A

SIZE	CAGE CODE		REV
D	1KNU9	20007864	A
SCALE 1:1		UNCLASSIFIED	SHEET 1 OF 1

FILE ATTACHMENT1
20007864.x_t

THIS DOCUMENT MAY CONTAIN ITAR CONTROLLED INFORMATION
AND/OR COMMERCE CONTROLLED INFORMATION
EXPORT RESTRICTIONS MAY APPLY

REV 6/04